SERVICE MANUAL

CARAMATE SERIES 3300 PROJECTORS

TELEX®

TELEX COMMUNICATIONS, INC.

9600 Aldrich Ave. So., Minneapolis, MN 55420 U.S.A.

VOLUME 3300A Litho in U.S.A. November, 1985

TABLE OF CONTENTS

SECTION I GENERAL INFORMATION

A. INTRODUCTION

This manual has been prepared as a guide for service and maintenance of the CARAMATE 3300 PROJECTOR. Obvious procedures are not stated.

B. PRINCIPLES OF OPERATION

The CARAMATE 3300 PROJECTOR is a front or rear screen projector utilizing 2 x 2 slides schronized with a monaural tape program.

The visual program is synchronized to the audio by using a monaural track cassette on which the control pulse is recorded on tracks 3 & 4. The audio is recorded on tracks 1 & 2.

C. SPECIFICATIONS

HEIGHT: 13-3/4"(349 mm) WIDTH: 13" (330 mm) DEPTH: 12-3/4"(324 mm) WEIGHT: 20 lbs.(9.1kg)

OPTICS: 77 mmf/3.5 Normal: 55 mm f/3.5 Magna-Frame (7 x and 10X magnification respectively on rear screen)

SCREEN: 9" (229 mm) square PROJECTION LAMP ANSI Code "DDM" 19V, 80 watt.

AMPLIFIER: 5 Watts R. M. S. 1200 Hrs. Lo setting; 125 Hrs. Hi setting;

SPEAKERS: 3 x 5 Oval (75 mm x 125 mm) 8 ohm impedance.

POWER REQUIREMENTS:

DOMESTIC:	INTERNATIONAL		OPTIONS
120V- 60 Hz	220/240V- 50 Hz	100 V- 50/60 Hz	
3320	3324	3326J	PLAY ONLY
3330	3334	3336J	PLAY ONLY with STOP PULSE
3340	3344	3346J	PLAY/RECORD
3350	3354	3356J	PLAY/RECORD with STOP PULSE

SLIDE:

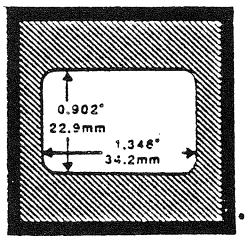

Mounted Slide

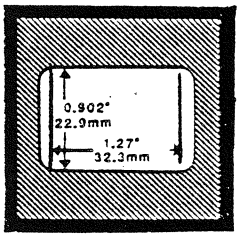

Rear Screen Area

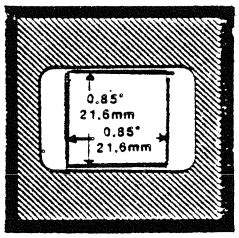

Magna-Frame Area

SLIDE ACCEPTANCE: All transparancies mounted in 2 x 2 slides meeting requirements of ANSI PH 3.43(1977)

	Thick Slides	Thin Slides
Size	2.000" to 1.969"	1.988" to 1.957"
Thickness	0.126" to 0.055"	0.055" to 0.040"
Flat within	0.126"	0.083"

SLIDE TRAYS: All Kodak Carousel * or Ektagraphic* slide trays and Kodak Stack Changer* as well as similar trays of other manufacturers that are intended for Kodak Carousel or Ektagraphic projectors.

* A trademark of Eastman Kodak Company.

TAPE PLAYER & TRACKS; The CARAMATE 3300 uses a two track cassette type tape on which 1000 Hz Advance pulse signals and 150 Hz Stop pulse signals are recorded on tracks 3 & 4 and the Audio portion of the program is recorded on tracks 1 & 2.

Cassette Track Utilization:

Tracks 1 & 2: Audio

Tracks 3 & 4: Pulse signal

Tape played in one direction only

Audio Level: Nominally: -4db
Referenced to 250 nWb/m at 315 Hz.

Program Pulse:

Duration: 0.45 ±0.07 second

Frequency: 1000 Hz ±5% Advance;
150 Hz ±5% Stop Pulse:

Spacing: 2.0 seconds from start of one pulse to start of next pulse.

Level: -6 db ±3 db referenced to 250 nWb/m at 315 Hz.

D. TOOLS

Molex Extractor # HT-2285 (Figure 1-1. below)
19-711 Test Tapes (SS-345)
19-708 Alignment slide
19-714 Torque Cassette , Hartak # X-87
Head alignment cassette-(Local Purchase)
Tape Head Demagnetizer
Slide Tray with slides
General hand Tools
Multimeter
Oscilloscope
VTVM

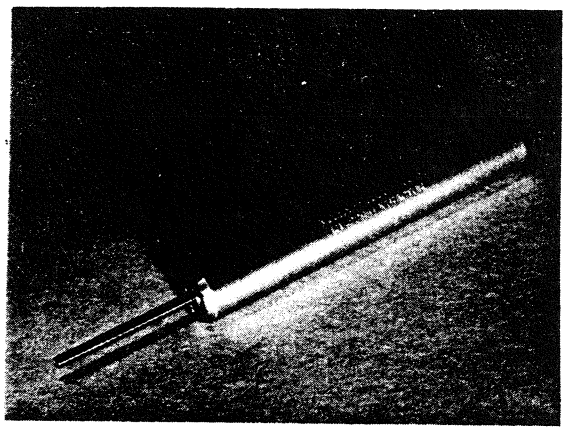

Figure 1-1 Molex Terminal Extractor # HT-2285

E. MATERIALS:

Materials required are listed in the following table. The stock numbers of the material available from Singer Education Systems are included. If no number is given, the product is commerically available and not supplied by Singer Education Systems.

39479-P9	DC-44 Light consistency silicone grease (Dow Corning Corp., Midland, Michigan), 2 oz.
39479-P16	Extreme Pressure Lube #3 (Evans Product Co). 4 oz.
39479-P1	Glyptal 7526 (Blue) General Electric Co., Schenectady , N.Y.
39479-P2	Glyptal 1276 (Clear) General Electric Co., Schenectady, N.Y.
46464-P1	Tape, (3 M Co. # 4416, 9 yd roll.
Local Purchase	Denatured (Isoproyl) alcohol
Local Purchase	Benzine
Local Purchase	Dry Neolube (Huron Industries, Port Huron, Michigan
Local Purchase	Plastic Cleaner
Local Purchase	Glass Cleaner
Local Purchase	Cotton swabs
Local Purchase	Pipe cleaners

F. ACCESSORIES

Catalog Number

3390	Carrying Case (Transit Type)
3391	Dust Cover
3392	Remote Control Cord (Non SP)
3395	Remote Control Cord (SP Model)
8811	Tape Deck Remote Control Cord
19-709	Foot Switch
19-710	Automatic Timer (2 to 30 adv/min)

PARA & TITLE PAGE

SECTION II PREVENTIVE MAINTENANCE & EXTERNAL ADJUSTMENTS

SECTION II PREVENTIVE MAINTENANCE & EXTERNAL ADJUSTMENTS

Most operating adjustments can be made externally, without disassembly. Preventive maintenance requires some disassembly to clean the inside screen and mirrors. Details of each adjustment follow:

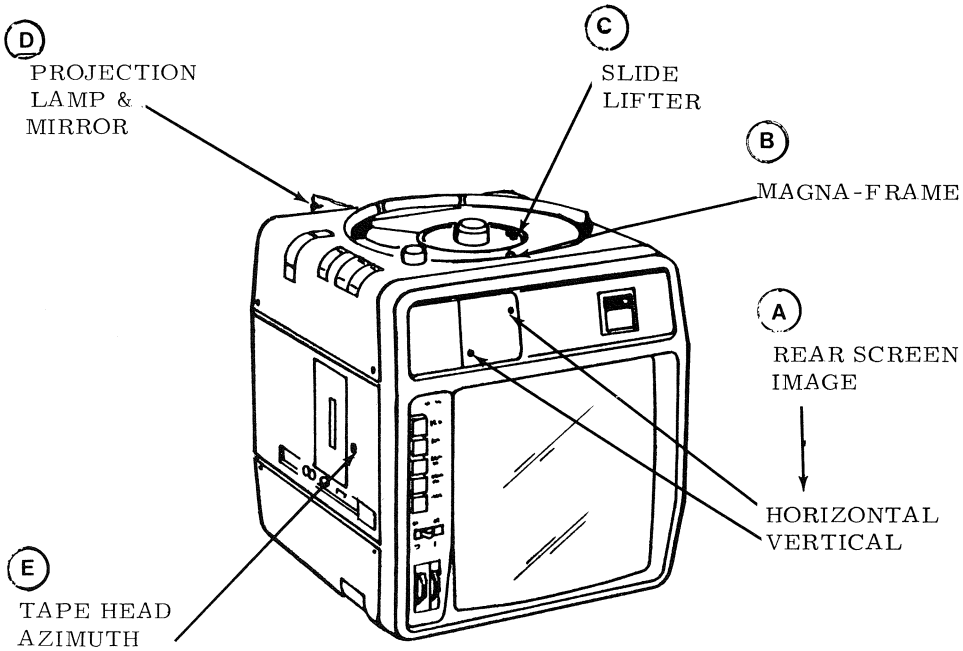

Figure 2-1. EXTERNAL ADJUSTMENT LOCATIONS

A. REAR SCREEN IMAGE CENTERING (A, Figure 2-1)

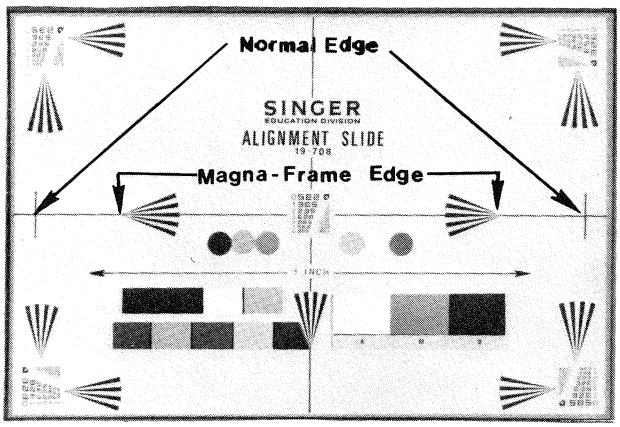

Figure 2-2 . ALIGNMENT SLIDE # 19-708

Use alignment slide (Figure 2-2 or a normal 35 mm double frame slide. Center the image with the horizontal adjustment screw on the front projection door. (Figure 2-3

Turn slide 90° for vertical centering adjustment.

NOTE: Generally one turn or less of the screw will center most images. However if the screws are backed out several turns, the screw will turn free, indicating that its tension nut is not being held by the mirror bracket.

For repair

1. Remove power cord from power outlet.
2. Refer to Section III, Para A . to open unit.
3. Slide the amplifier back and reach in to hold the tension nut with your fingers.

B. MAGNA-FRAME HORIZONTAL CENTERING (Figure 2-1)

Remove the dust cap using pointed tweezers. Use Alignment Slide (Figure 2-2) and turn screw as necessary to locate Magna-Frame edge.
NOTE: If alignment Slide is unavailable, it will be necessary to make a substitute by marking the center 3/4" (19.5mm) area on an old slide(See slides Section I, Paragraph C).

TURN SLIDE AND ADJUST VERTICAL

Figure 2-3 . REAR SCREEN IMAGE CENTERING

C. SLIDE LIFTER HEIGHT (C, Figure 2-1)

To adjust slide lifter height, use a loaded 80 slide tray.

1. Remove the dust cap (C, Figure 2-1) using pointed tweezers.

2. Position loaded slide tray on projector and rotate to slide #18 so that adjustment screw is accessible

3. Turn projector ON. Press and hold the SELECT button to raise the slide lifter.

4. Slide #18 should be raised about 1/16" (1.5mm) above adjacent slide.

5. Turn adjustment screw (C, Figure 2-1) with 0.0500 (1.27mm) socket screw wrench.

6. Check rotation with 80 & 140 loaded slide trays. If too high, the 140 slide tray may rotate roughly. Re-adjust the height slightly and recheck with both trays.

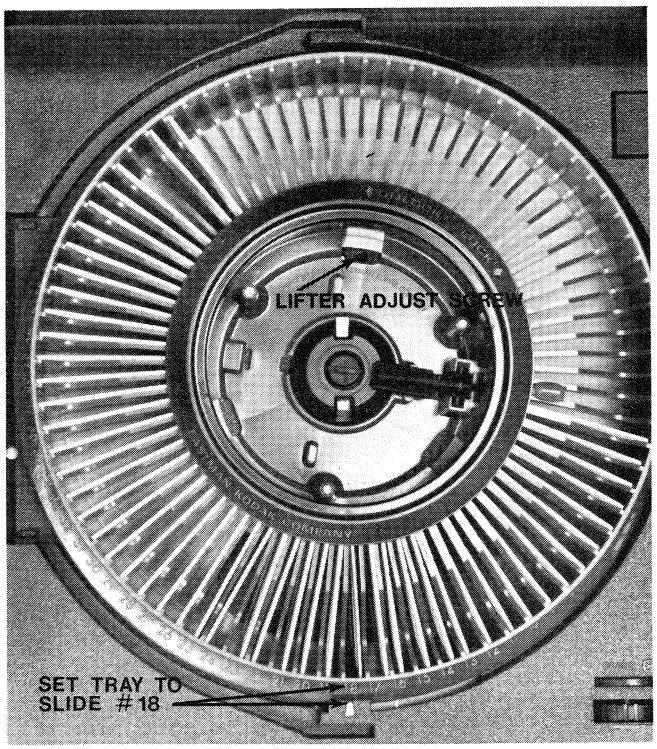

Slide should be just high enough to rotate tray smooth when SELECT button is depressed. Check with loaded 140 slide tray.

Figure 2-4. LIFTER ADJUSTMENT

D. ILLUMINATION -Lamp Mirror (D Figure 2-1)

The mirror position is adjusted, horizontal and/or vertical to center the lamp illumination with the optical projection axis for Rear or Front Screen projection.

1. Slide the front screen projection door open.

2. Trip the slide edge clamp to open the shutter

3. Turn focus knob to move normal projection lens forward. Do Not use Magna-Frame lens.

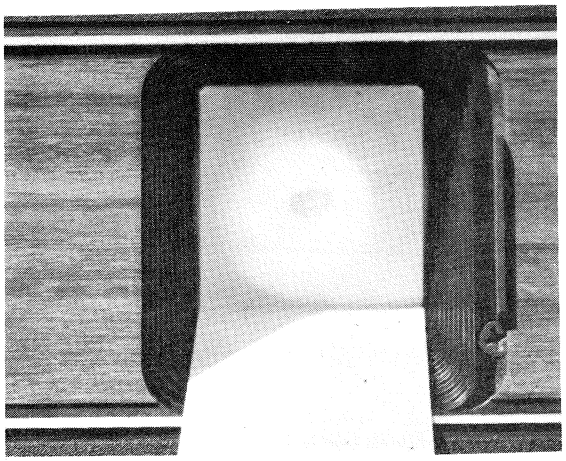

Figure 2-5. CHECKING ILLUMINATION CENTERING

4. Cut an index card to 1-3/4" x 6" (45 x 150mm). Fold 1-3/4" square end (Figure 6).

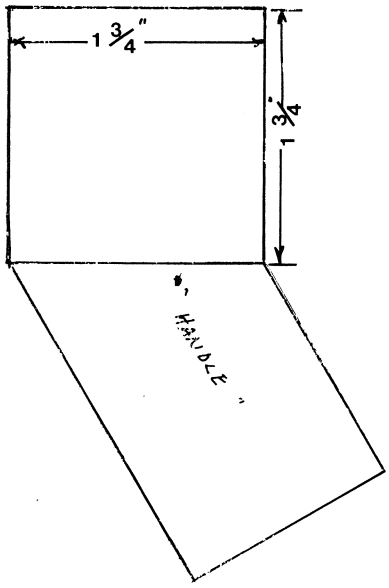

Figure 2.6. LAMP MIRROR ALIGNMENT CARD

5. Insert square end of card in contact with front window (Figure 2-5). The lamp filament should be a dark spot in the center of illuminated circle.... if not, try another projection lamp then adjust as follows.

6. Open lamphouse door and adjust mirror (Figure 2-7) so that the dark center filament image is in approximate center of the bright circle.

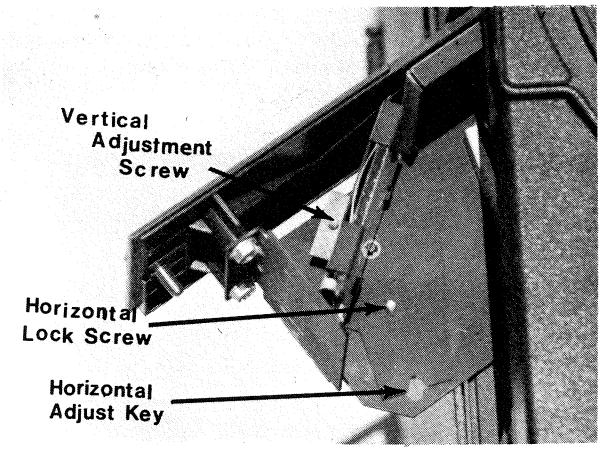

Figure 2-7. LAMP MIRROR ADJUSTMENTS

7. Use 3/16" socket wrench on screw heads. A 5/16" flat screw driver can be inserted in the horizontal adjustment slot. Be sure to close and secure lamp door when observing each adjustment.

E. TAPE HEAD AZIMUTH ADJUSTMENT(D, Figure 2-1)

1. The adjustment screw is located under the dust cap at the front edge of the tape cassette door.

2. See Section V, Para. A for adjustment.

F. CLEANING

1. MIRRORS

a. Minor disassembly is necessary - see Getting inside, 3300 Series (Section III, Para. A)

b. First dust mirrors lightly to remove dust particles. Second- to remove smog, clean with a soft, lint free cloth dampened with commerical lens cleaner.

NOTE: Do Not use silicone treated lens tissues on mirrors or coated lens optics.

2. FRONT PROJECT WINDOW

Clean as for mirrors above. And in this case only, it is permissable to use silicone treated lens tissue for final wipe.

3. RECORDING AND PLAYBACK HEADS

To clean the recording or playback heads, use a commerical head cleaning cassette or moisten a clean cotton swab with denatured (ISOPROPYL) alcohol only. DO NOT use any sharp objects that will scratch or mark the head.

4. TAPE DECK BELTS, IDLERS AND FLYWHEEL CAPSTAN.

Periodic cleaning of the idlers and pinch roller, flywheel capstan and belts will prevent most tape transport problems. See Singer Education Systems service manual on tape decks for details.

SECTION III. MECHANICAL ADJUSTMENTS AND SPECIFICATIONS

SECTION III. MECHANICAL ADJUSTMENTS AND SPECIFICATIONS

A. GETTING INSIDE , 3300 SERIES.

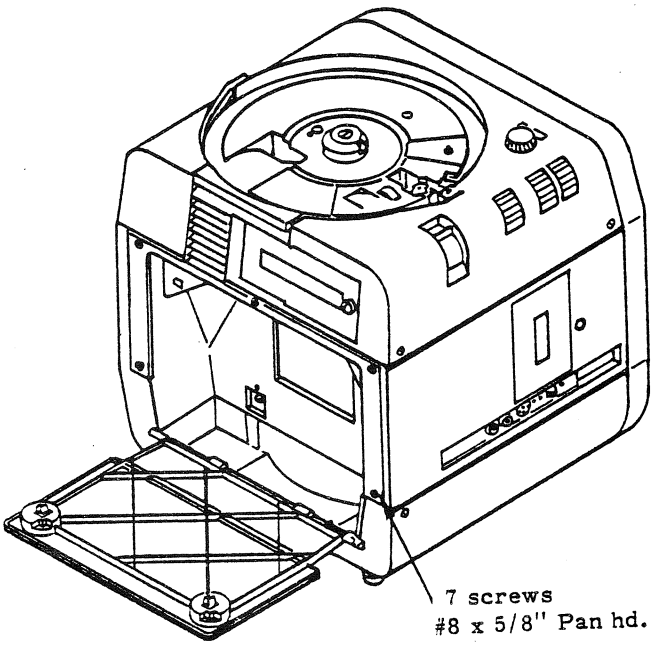

Step 1. Remove inside back panel.

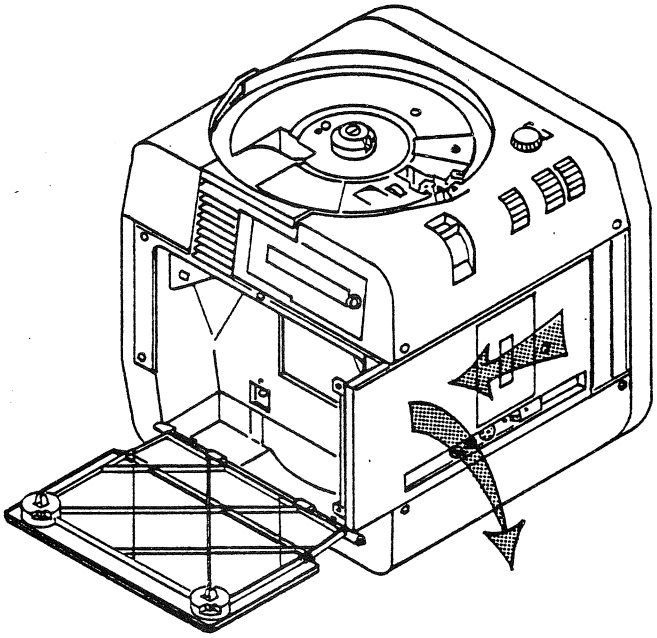

Step 2. Slide tape/amplifier assembly back 1-1/8" and lift off. Unplug cables.

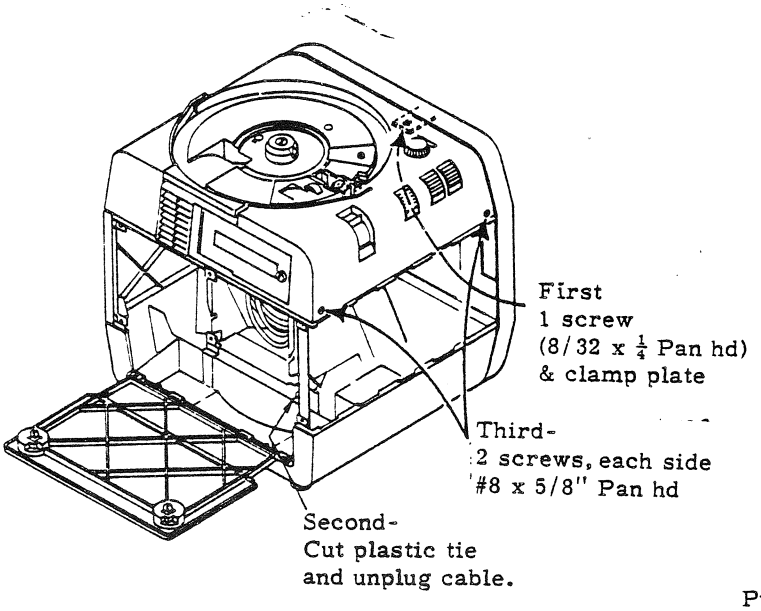

Step 3. Remove top.

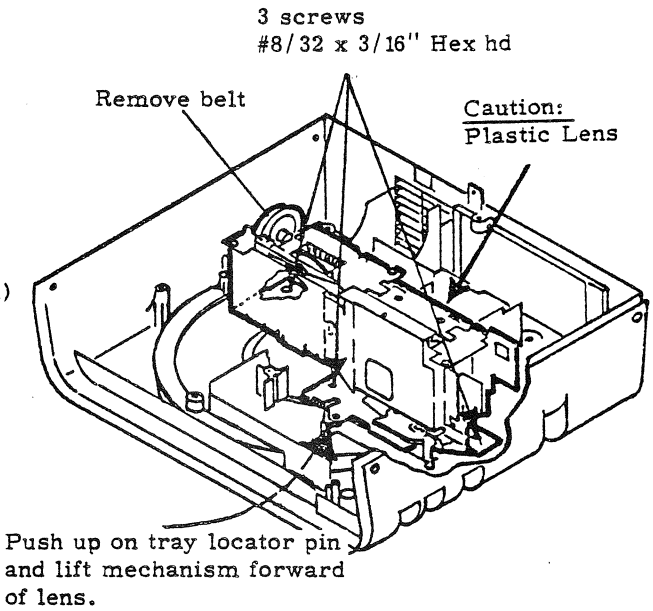

Step 4. Remove mechanism assembly.

B. SERVICE TIPS AND NOTES.

1. Mechanism assembly removal

When removing the mechanism assembly, do not brush the plastic condenser lens. Marks on this lens will project as dark spots on the rear screen. After the three mounting screws and drive belt have been removed, press in on the slide tray locator pin (outside of top) and lift mechanism out.

2. Mechanism & lever bind.

On projectors with Code H8 and earlier, the escapement lever may bind because a $\frac{1}{4}$" diameter "O" ring has split and fallen out of position. On these assemblies, remove the "O" ring and replace it with plastic guide #45349-P1. (This guide is also used on the shutter cam follower, but modified by cutting off one tip as illustrated below.)

Assemble guide as illustrated in Figures 3-1 and 3-2.

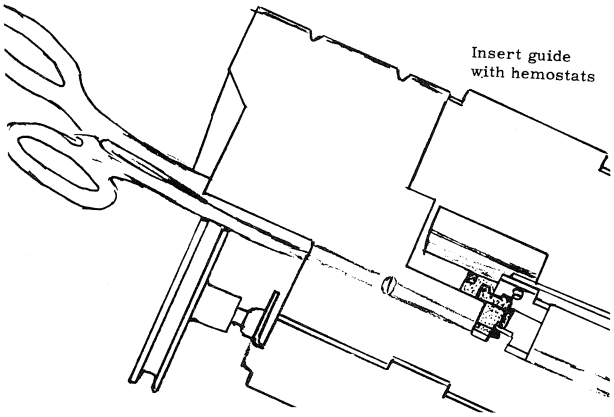

Figure 3-1. Assembly of guide.
45349-P1

Escapement must not bind against guide. Form frame arm parallel.

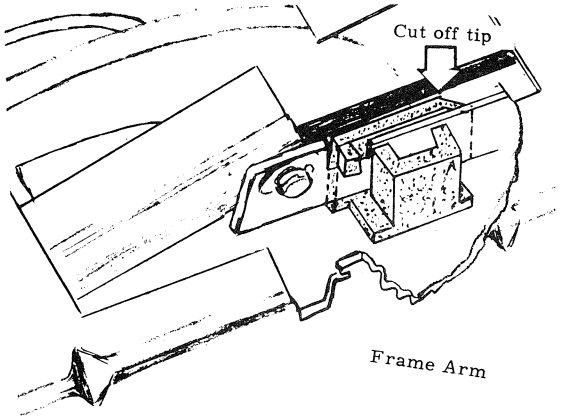

Figure 3-2. Modified guide 45349-P1

3. Index Guide Spring 45344-P2

Assemble spring as illustrated in Figure 3-3 below. The straight spring terminal must bear against the mechanism plate - form at "step down" if necessary. Be sure that the plastic guide pin on the bottom of the index arm is positioned between the spring terminals.

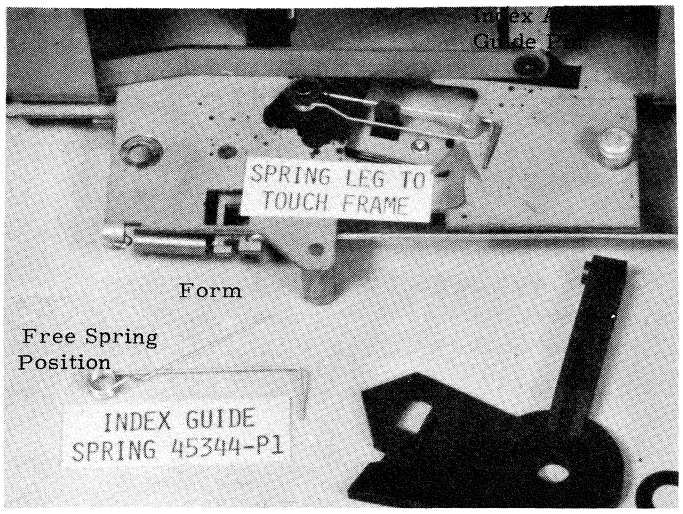

Figure 3-3. Index Guide Spring (45344-P2) Assembly.

4. Mechanism Reassembly (Figure 3-4.)

To hold select pawl in position while mechanism is turned over for reassembly, snap a rubber band around the mechanism and over the select pawl. Be sure to remove rubber band after the mechanism is secured.

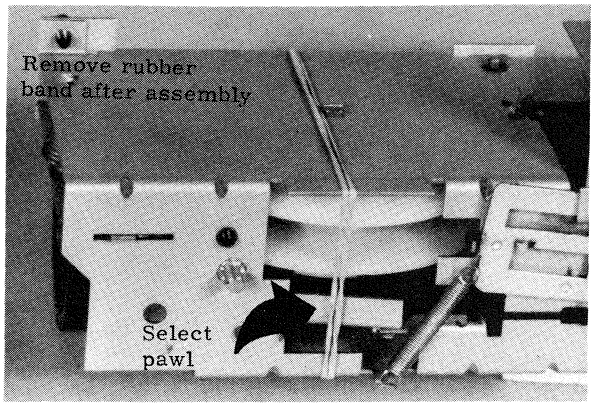

Figure 3-4. Holding select pawl for reassembly.

5. Mirror Replacement

If it is necessary to replace a "first surface" mirror:

a) clean the plastic surface with benzene to remove the silicone die release used when molding the part.
b) To the projector mirror support, apply strips of double sided tape similar to the original size. Use 3M tape #4416 available in 9 yard rolls as P/N 46464-P1
c) Press the tape firmly in contact with a narrow print or wallpaper roller.
d) Clean the back of the mirror with benzene. Check the mirror surface; all are "first-surface mirrors".
e) Locate the mirror exact. Cover with paper and press into firm contact.

6. Image Tilt on Rear Screen.

Shim left rear corner of the large mirror (primary). Remove bottom screw and insert suitable washer between projector base and mirror support. Generally, 1/32" to 1/16" thick washer will correct most tilted images.

7. Tape Deck Reassembly

Shift projection lens to Magna-Frame ... then the tape cassette door latch will not trigger and open the cassette door when the amplifier assembly slides into position.

C. DRIVE CLUTCH

When the main power switch is on, torque from the motor, thru the neoprene drive belt, to the pulley and worm gear (not illustrated) will drive the cam worm gear (Figure 3-5.)

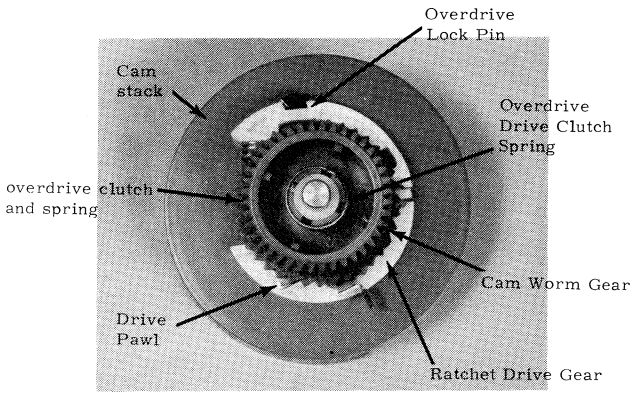

Figure 3-5. Drive Clutch.

In Idle condition, the cam worm gear is driven, but drive clutch spring allows it to slip on its shaft. The drive pawl is held "open" by the escapement lever (Figure 3-6) and the cam stack does not turn.

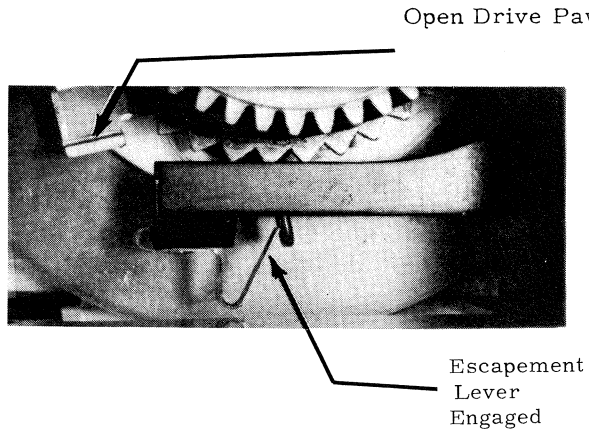

Figure 3-6. Drive Pawl in Idle Condition.

In Drive condition, the excapement lever, linked to the solenoid, is pulled to release the drive pawl which swings "closed" (Figure 3-7) to engage the ratchet drive gear. Now the cam worm gear, coupled thru the overdrive clutch and its lock pin, turns the cam stack one revolution or one slide change cycle.

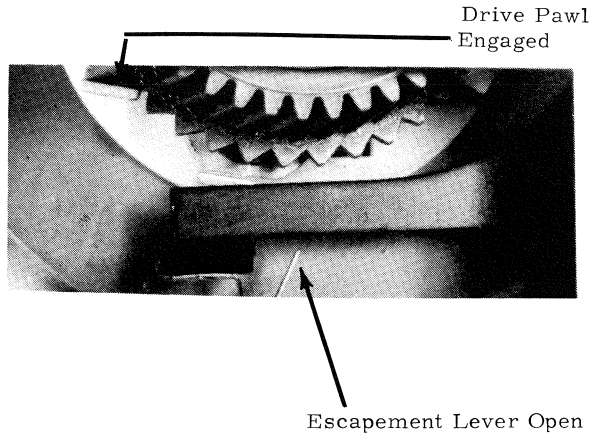

Figure 3-7. Drive Pawl in Drive Condition.

A jammed slide or tray will obstruct lever movement and cause a binding load on the cam stack. In this case, the overdrive clutch releases at its lock pin (Figure 3-5) to complete the cycle to the idle condition without further damage and to hold this condition until the jam is cleared.

NOTE: Timing of cams, levers or drive gears is not required by this mechanism.

D. SELECT SLIDE OPERATION

1. Electrical

Electrically, the select operation is the simplest function since it does not use any of the transistor logic circuits. Contact is made through the power supply to the continuous duty solenoid which is held in as long as the button is depressed.

2. Mechanical(Figure 3-8). Mechanically, two events occur and at the same time. The solenoid is energized which pulls the escapement allowing the select pawl to drop. The select pawl will now catch the drive pawl, after the cams rotate 180°, and hold it released as long as the select button switch is closed to energize the solenoid.

The select button presses the select arm to pull the link and select lever forward so that the cam follower pin is disengaged, inactivating the tray index. The slide lifter and tray detent will function to lift the slide and allow the slide tray to rotate manually.

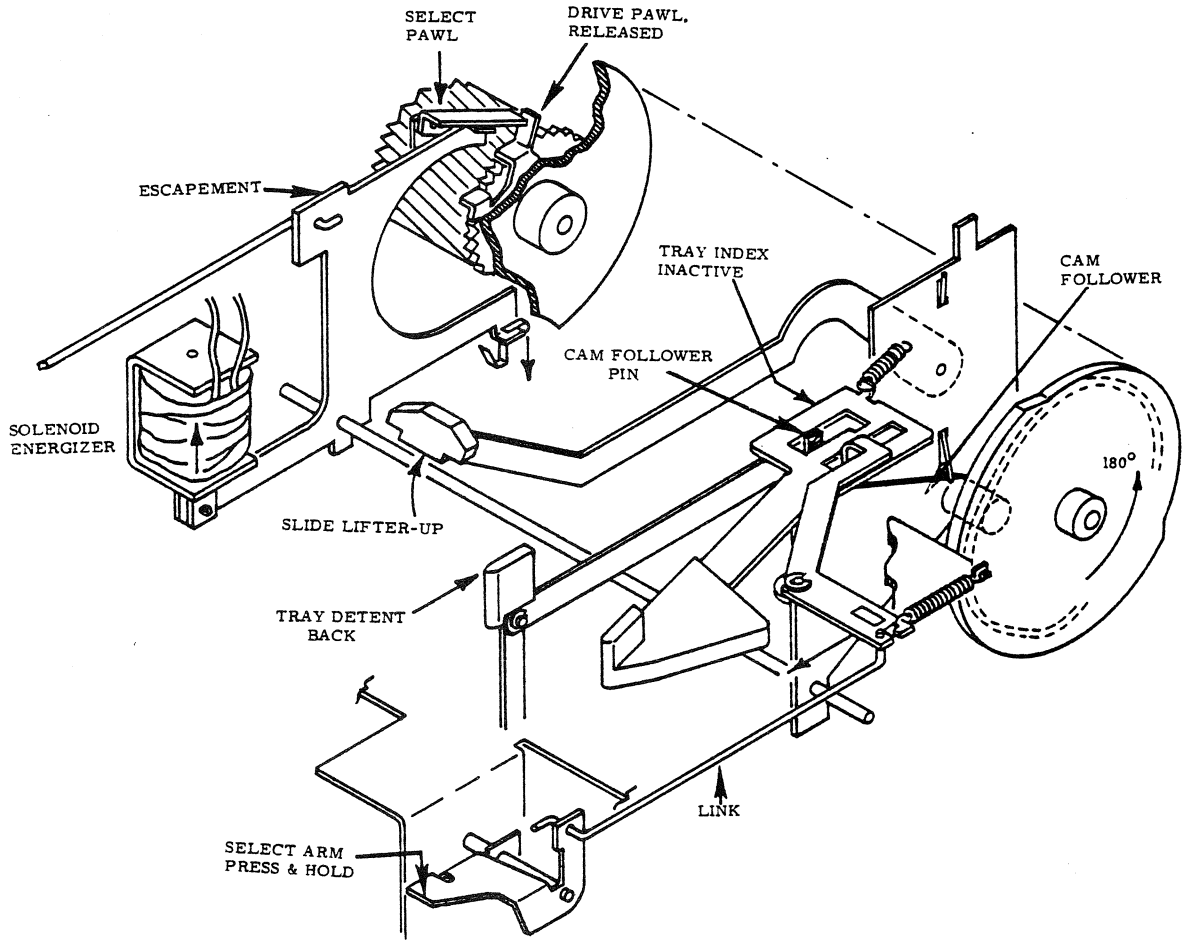

Figure 3-8. Select operation. "Hold Position".

E. ADVANCE OPERATION

1. Electrical.

Electrically, the solenoid, controlled by the logic circuit, pulls in for only 20 milliseconds to release the mechanical drive. See Electrical. Section IV; Manual Advance.

2. Mechanical

Mechanically, the drive clutch(Figure 3-5) is released(Figure 3-7). The cams rotate to drive the Tray index arm forward (Figure 3-9). The tray index pin guides along the "front V" of the front/rear cam to advance the slide tray to the next slide.

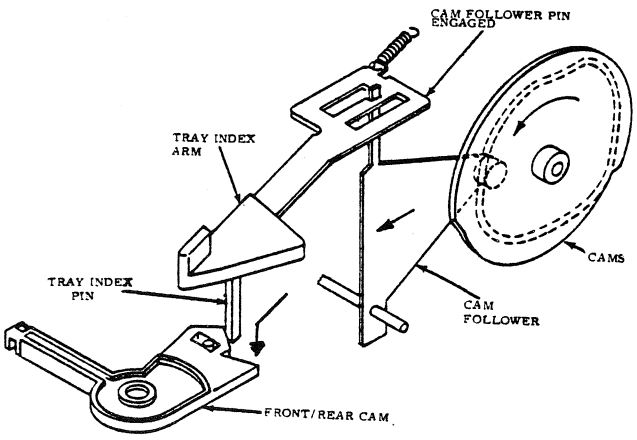

Figure 3-9. Advance Operation

3. Adjustment(Figure 3-10)

With the mechanism relaxed, the front/rear cam will rest against the stop pin... the link to the solenoid will be pushed to the right as illustrated. In this condition, check, and adjust if necessary, the clearance between the adjustment nut and the extended arm of the front/rear cam. Snap the front/rear cam several times and recheck to be sure that the 0.005" to 0.020" clearance is holding.

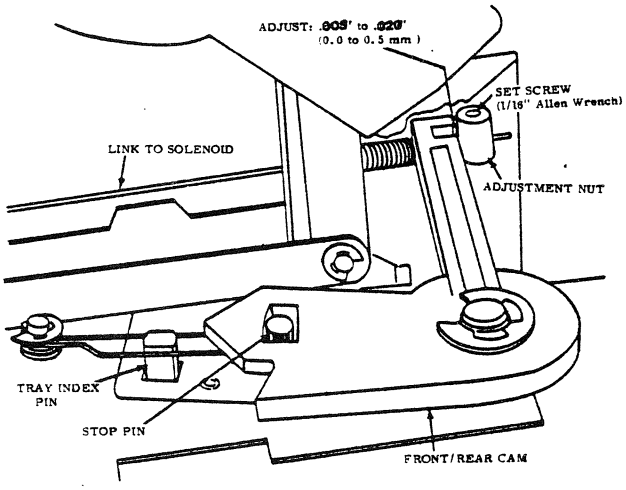

Figure 3-10 Advance Adjustment

F. REVERSE OPERATION

1. Electrical

Electrically, the solenoid, controlled by the logic circuit, pulls in and holds for 400 milliseconds to release the mechanism drive and position the front/rear cam. For logic details, see Section IV, Manual Reverse.

2. Mechanical

Mechanically, the drive clutch (Figure 3-5) is released(Figure 3-7). Then the cams rotate 120° while the solenoid holds the front/rear cam back for 400 milliseconds(Figure 3-11). The cam follower pin drives the tray index arm and its pin forward to guide along the "Rear V" of the front/rear cam to reverse the slide tray rotation to the previous slide.

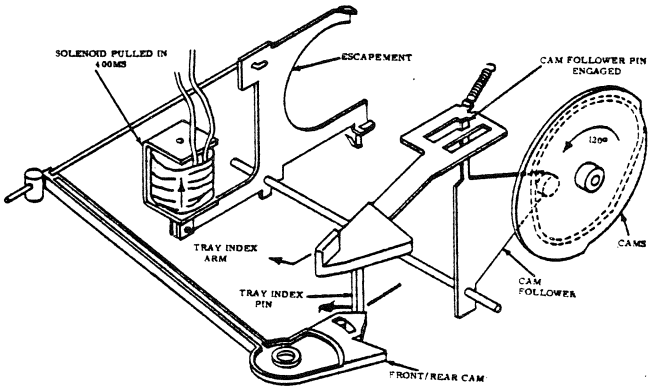

Figure 3-11. Reverse Operation

3. Solenoid Adjustment (Figure 3-12)

The solenoid, position for reverse operation is adjusted after the advance operation is verified (Para III, E. 3.).

a) Energize the 12VDC solenoid or press the armature in by inserting a thin blade tool through a hole in the top mechanism plate.

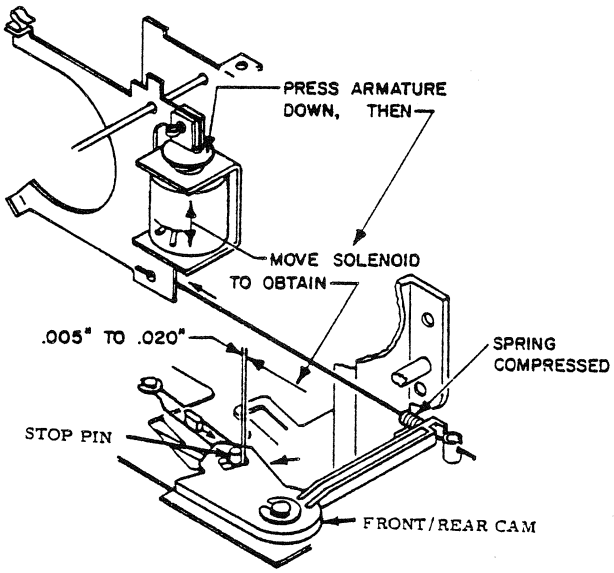

Figure 3-12. Reverse adjustment

b) Observe the stop pin clearance and back edge of the slot in the front/rear cam. This clearance must be .005" to .020" (0.1 to 0.5mm).

c) Move solenoid up to decrease pin clearance if necessary. This will cause the tray index arm pin to follow the rear "V" of the front/rear cam.

G. SLIDE LIFTER

1. The slide lifter is a cam driven lever having an adjustable fulcrum point which changes high-lift position of the slide pad.

2. See paragraph II. C. for adjustment using a slide tray, or use the following alternate method.

3. On the adjustment screw, remove the dust cap located on the top just right of the center post. Use a pointed tweezer to pop the dust cap.

4. Turn the projector ON. Press and hold the select button to raise the lifter.

5. Lay a #35 drill (.110" or 2.8mm diameter) along the outside edge of the slide pad and compare the height (Figure 3-13).

6. If necessary, turn the adjustment screw with a hex wrench (0.050" or 1.27mm).

7. Check rotation with loaded trays of 80 and 140 slides. If the lifter is too high, the 140 tray could rotate roughly. In this case, reduce the height and recheck both trays.

H. DETENT (Slide Tray Lock).

The detent locates and locks the slide tray slot over the mechanism slide guides assuring that the slide will drop by gravity into the project position.

The cam, cam follower and levers provide drive to the detent. The cam assembly is designed so that the detent locks the tray until the lifter is up and the slide 80% within its tray slot. Then the detent pulls back until the tray is indexed. The detent locks the tray before the lifter drops the next slide. There is no adjustment.

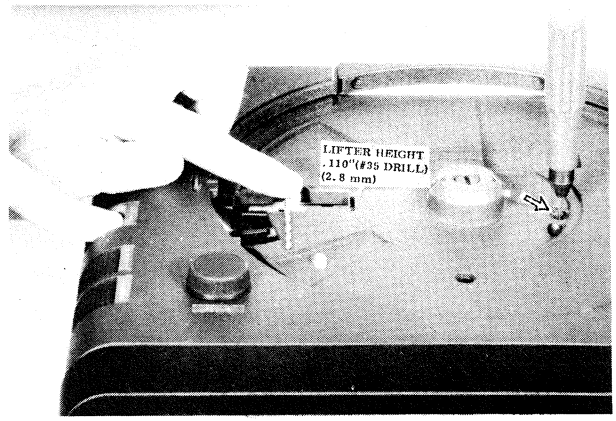

Figure 3-13. EXTERNAL ADJUSTMENT LOCATIONS

J. SHUTTER AND SLIDE CLAMPS (Figure 3-14)

1. Operation

The cam follower lever controls shutter closure and cams face clamps open. Coil springs control the face and edge clamps and provide a lever override.

Operation - the slide is registered toward the center by the edge clamp. At this time the slide, in the gate, releases the latch (1)... this allows springs to pull cam follower (2) and open shutter blades (3). At the same time, the slide face clamps are spring loaded against the slide.

When the slide is ejected, the cam follower is driven up to close shutter blades and open side clamp. The face clamps are closed until the slide is about 80% up and in the tray. Then the cam follower cams the face clamps open and holds to receive the next slide. If there is no next slide, the cam follower drops a bit to close face clamps and latch on the edge clamp.

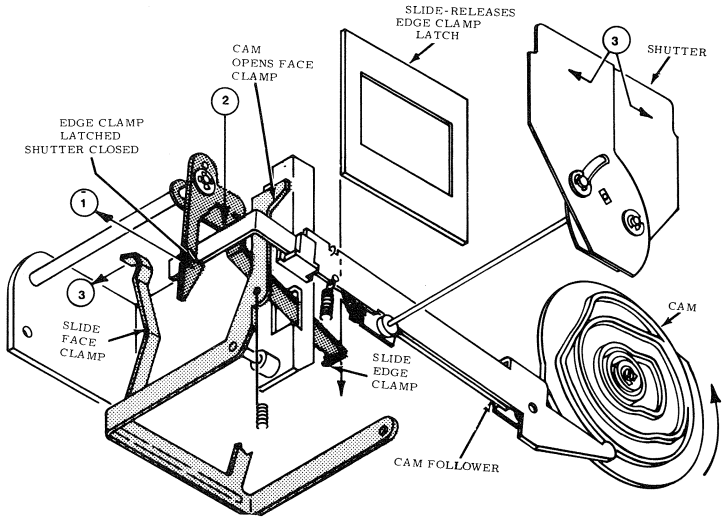

Figure 3-14. Shutter and Slide Clamp Operation

2. Shutter Service. If shutter or slide clamps fail, check four control springs (Figure 3-15 & 3-16)

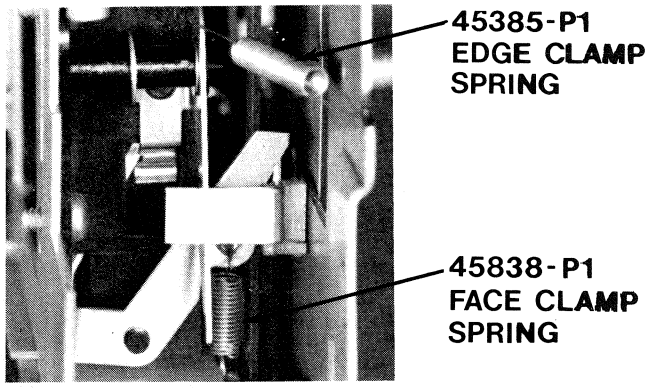

Figure 3-15. Slide Clamp Springs

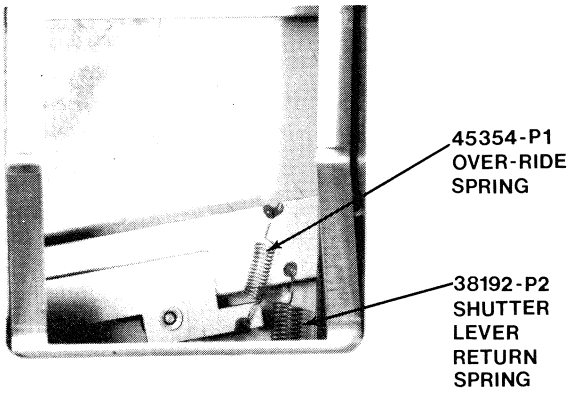

Figure 3-16. Cam Follower Lever Springs

3. Face Clamps (Figure 3-17). Check slide face clamps as dimensioned below. The "cammed open" dimension can be measured when the "Select" button is depressed.

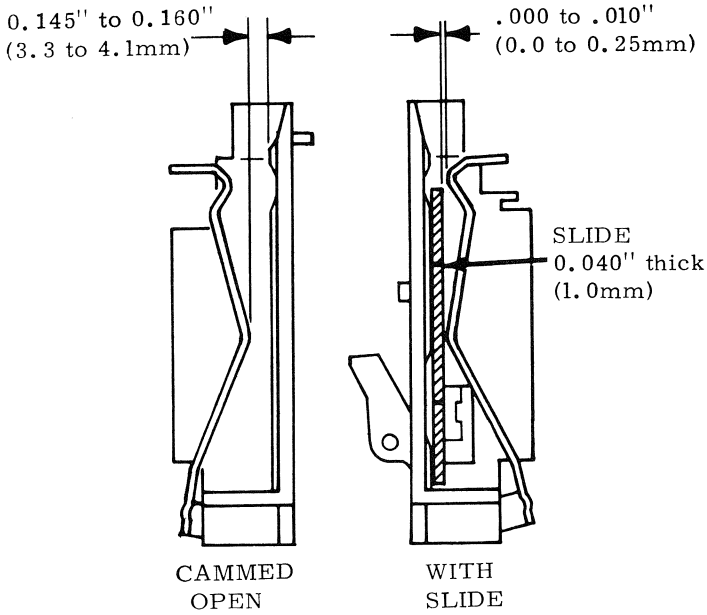

Figure 3-17. Slide Clamp Clearances

3a. Detent Arm Alignment (Figure 3-17a)- Slide jams or hits the tray when entering, due to thick slides or 140 tray that is not indexed to the exact position. Use feeler gages to check the clearance between the detent finger and slide guide. Adjust by finger pressure on the detent finger or lower on its vertical arm.

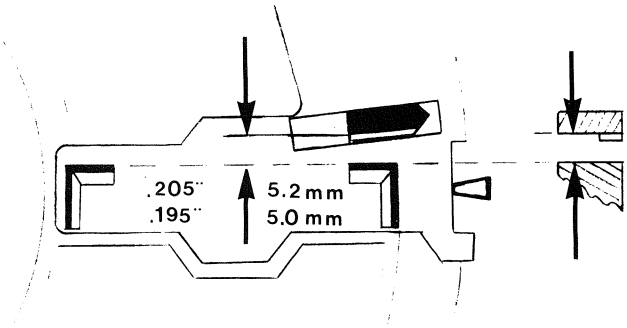

Figure 3-17a. Detent Arm Alignment

4. Shutter Wink (or bounce)- might occur on Projectors manufactured prior to Code M8. In this case, replace the shutter cam follower with the current part (# 45350-G3) as follows;

a. To replace, remove the mechanism cover.

b. Unlock the lever return spring (#38192-P2)

c. Pull the lever pivot shaft back enough to remove the shutter cam follower.

d. Position the new shutter cam follower and reassemble.

5. Slide Plane Focus (Figure 3-18)- Slide plane focus is not a routine service need. The slide adjustment plate controls position (Right to left or top to bottom) of the slide guides. Normally, this plate is parallel and flush with the back edge of the frame top. Also, if a focus problem, inspect for something out of position.

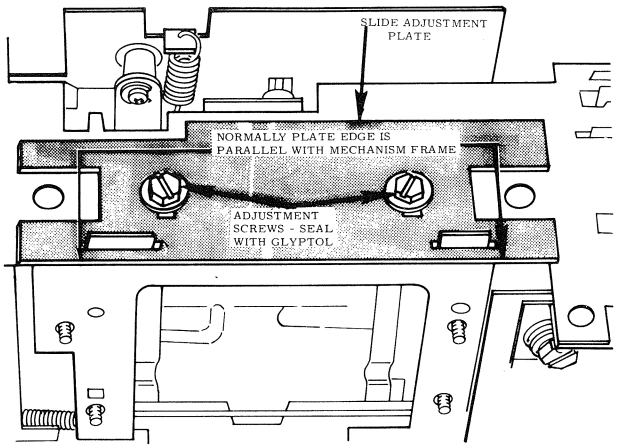

Figure 3-18. Slide Plane Focus Adjustment

K. SERVICE & PRODUCTION CHANGES

1. Blower Motor Replacement

The blower motor was changed, after code B9K. This change obsoletes motor Part No. 45395.

To replace:

120V, 60Hz	Motor Assy 45395-G1,	Use 46138-G1
	Motor Only 45396-G2,	Use 46136-P2
220V, 50Hz	Motor Assy 45395-G3,	Use 46138-G3
	Motor Only 45669-G2,	Use 46153-P2
100V, 50Hz	Motor Assy 45395-G4,	Use 46138-G4
	Motor only 45669-G3,	Use 46126-P2

Also order:

Qty.	Part No.	Description
4	139-8-8-X	Screw(#8x½"long), mounting
1	46464-P1	Bumper Tape (4416-3M), 9-yd. roll
1	46143-P1	Bumper
1	45646-G1	Lug Assy(Wire tie) for motor wires
1	Local Purchase	Tape, glass filament 3/4" x 3"

Installation: Figure 3-19.

a) Disconnect 4-conductor cable and remove blower motor assembly.

b) Install 45488-P14 bumper, flush with top edge of housing and secure with glass filament tape.

c) Attach bumper 46143-P1 to cover

d) Mount motor with four 139-8-8X screws.

e) Plug motor and cable together. Secure wires under tie lug 45646-G1 on top edge of slide mechanism

f. Tuck motor wires toward side of housing, away from motor belt and pulley.

g) When replacing baffle, make sure all wires are behind the baffle and away from any moving parts.

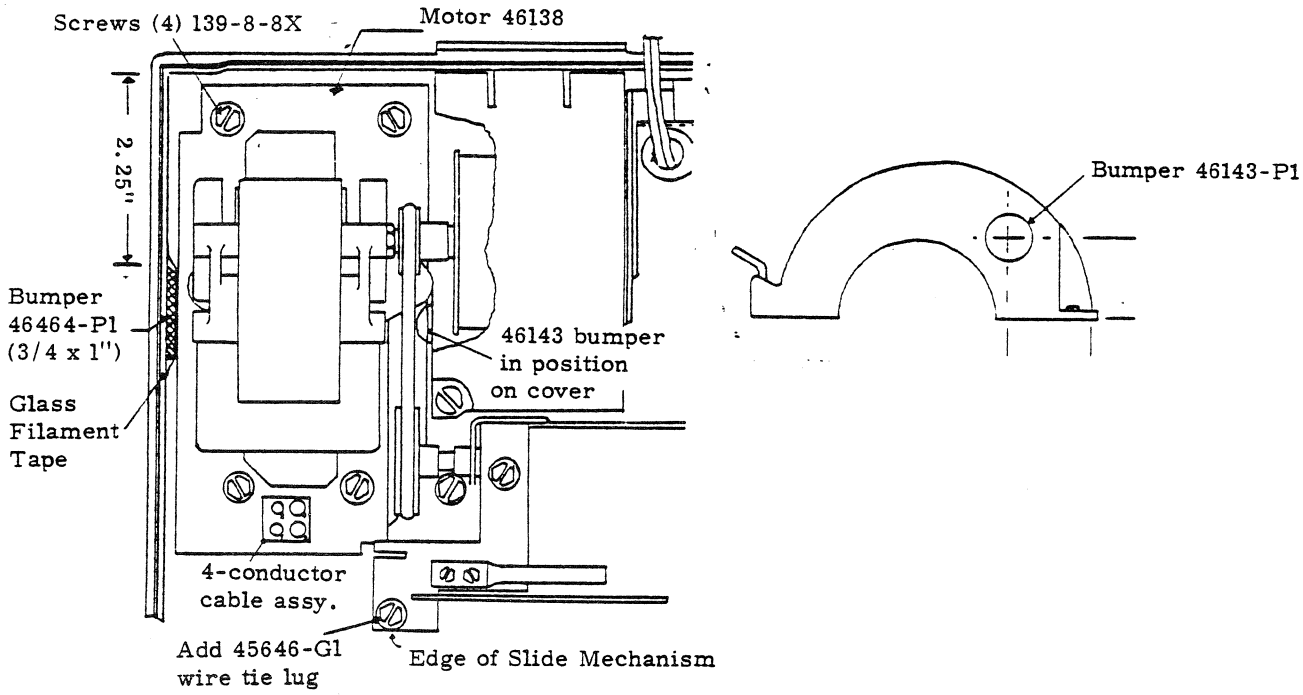

Figure 3-19. BLOWER MOTOR REPLACEMENT.

2. FLUX SHIELD

The flux shield was used to prevent slide tray vibration on projectors manufactured prior to Code B9K.

Installation:

a) Clean the top of the projector and the bottom of the shield with alcohol to remove old tape.

b) Apply new "paper thin" double sided tape (915-3M Co.) on the areas shown below (Figure 3-20.)

c) Apply commercial "Zip Grip 10" cement at points marked (X).

d) Position shield on the top of the projector. Press firmly on tape and cement areas for two minutes.

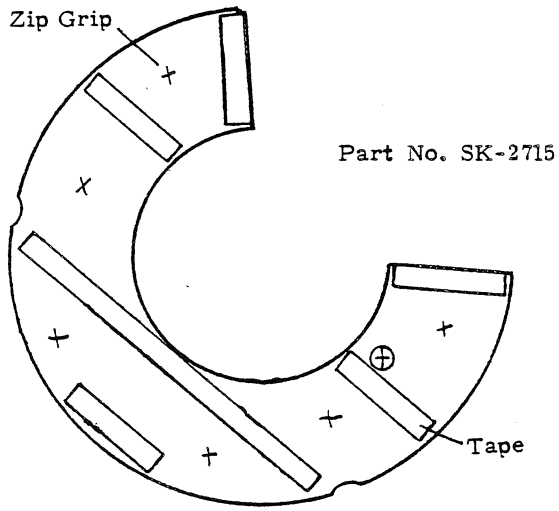

Figure 3-20. REPLACING FLUX SHIELD

3. BEZEL STIFFENER (#SK-2721) & BRACE (#46144-G1)

The bezel stiffener is used with early blower motor (45395-G-) above and can be used with the new motor. The bezel brace is used with the current blower motor (#46138-G-)

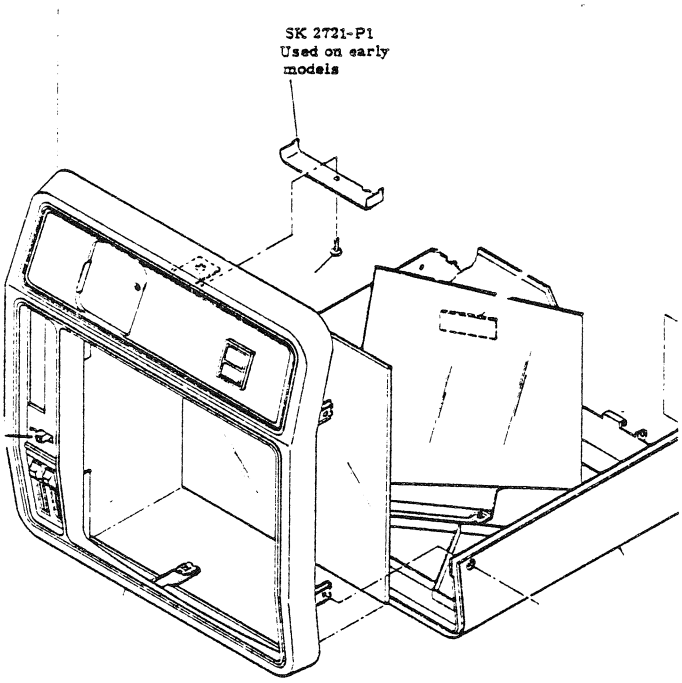

Figure 3-21. Bezel Stiffener

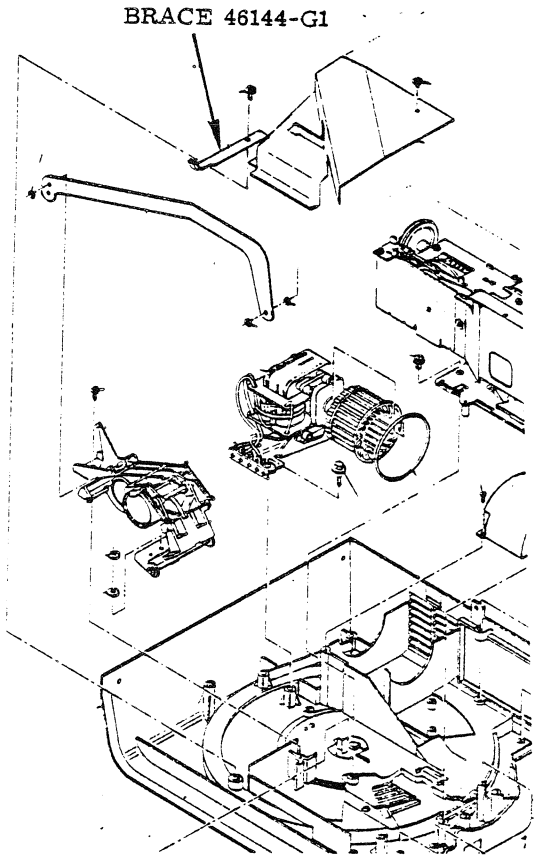

Figure 3-22. Bezel Brace

4. TRANSFORMER FUSE LINK

Electrical safety requirements of UL and CAS require an internally fused transformer. Replacement of the fuse link is permitted if the identical fuse is used and the repaired unit is Hi-pot tested (Dielectric breakdown) after repair.

a) Use a Buss fuse link #LKB-3 available from Singer Education Systems as Part No. SS-359.

b) Carefully cut through the outer insulation between the power wire connections of the transformer to uncover the fuse. Figure 3-23. Transformer Fuse - link replacement.

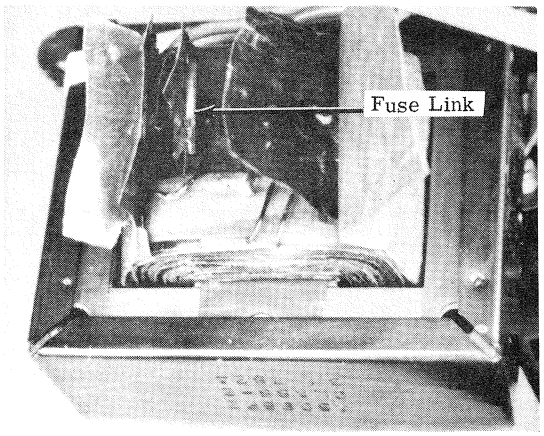

Figure 3-23. Transformer Fuse Link Replacement.

c) Remove the defective fuse and replace with an LKB fuse of the correct value.

Domestic 60Hz - both Green leads of secondary
Internationa, 50Hz - in Black/Red and Red/Yellow lead of secondard.

d) Place the insulation in its original position over the fuse and secure with glass filament tape.

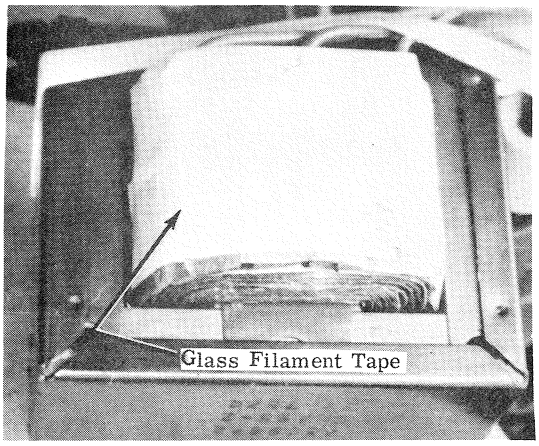

Figure 3-24. Transformer Wrap After Repair.

5. HIGH LINE VOLTAGE - 120v, 60Hz

The Caramate 3300 is designed to operate at a line voltage of 105 to 125 volts. If the line voltage is higher than 125 volts, it could cause the fan drive motor to overheat. If the motor overheats, thermal breaker will open and shut down the entire projector. After the motor cools, usually about 30 minutes, the projector will operate normally.

In instances where the machine is used on high line voltages, the following modification will reduce the voltage sufficiently to keep the motor from overheating.

ITEM	P/N	DESCRIPTION
1	*Local Purchase	10ohm 50-watt wire would resistor
2	44505-P18	Housing - Inner
3	44505-P19	Housing - Outer
4	44360-P1	Terminal - Male
5	44360-P2	Terminal - Female
6	Local Purchase	Wire-18AWBx26" (2 pcs.)

* Available through electronic supply houses, such as Allied Radio Supply, Newark Electronics, Cramer Electronics

MODIFIED AS FOLLOWS:

a) RESISTOR - remove the left rear strap. Center resistor between clips and drill two holes to mount resistor as shown. Use #6-32 machine screws and nuts.

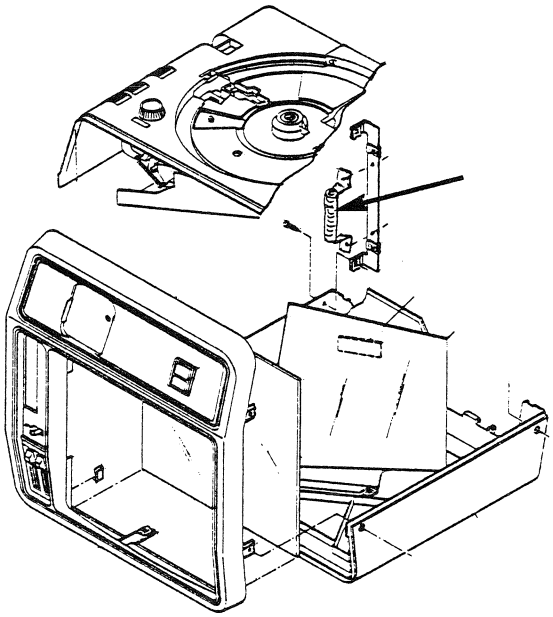

Figure 3-25. High Line Voltage Modification.

b) During assembly, the Caramate cable should be strapped to the 18 AWG wire in front of the resistor. Be sure that Caramate cable and wires do not touch resistor.

c) Wire as follows:
   1) Connect male terminal to one wire. Place outer connector housing over terminal
   2) Connect female terminal to other wire.
   3) Solder one wire to each side of resistor.
   4) Remove white wire from connector to fan motor (J25-3). There will be a female terminal on this wire. Place this terminal in New Inner Connector housing.

   5) Connect housings from steps 1 & 4 together.

   6) Insert terminal from step (2) into the fan motor connector (J25-3). The resistor is now in series with the white motor load.

   7) Use lamp on low light level for maximum lamp life.

6. HIGH LINE VOLTAGE 220/240V, 50Hz

The international models are designed to operate at 220 or 240 volt, 50Hertz. When used with a mains supply in excess of 240 volts, the fan motor might overhead on projectors manufactured before Code H9L. Overheated motors will cause the termal breaker to open and shut down the projector for about 30 minutes until the projector cools.

a) Figure 3-26A illustrates the terminal block located on the side of the large mirror support. Remove the amplifier tape deck assembly support. Remove the amplifier tape deck assembly to change connections.

b) Rewire per Figure 3-26B. This will reduce the motor temperature. Projectors manufactured after Code H9L have this new wiring.

c) When replacing transformers (P/N 45674-P2) connect as shown in Figure 3-26B.

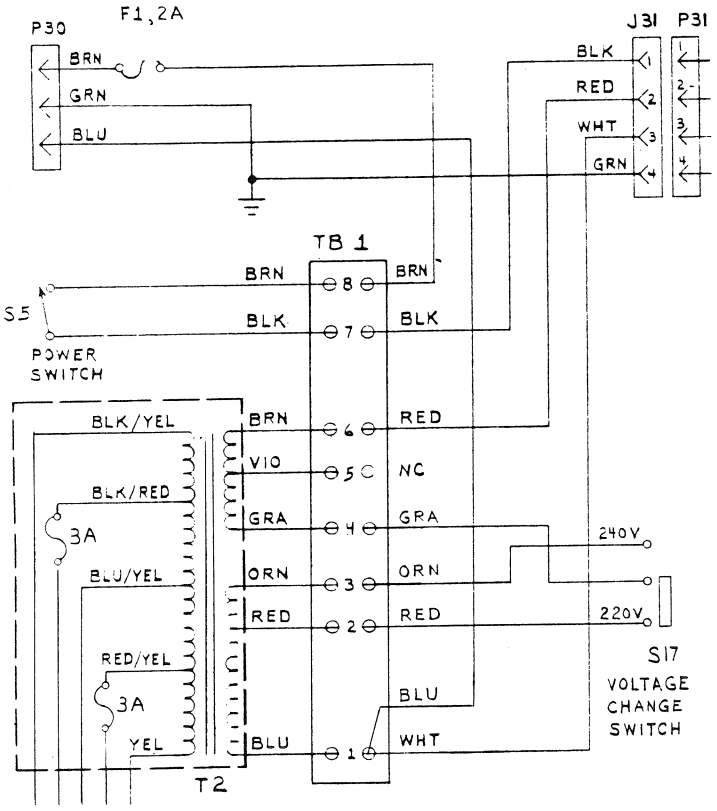

A-Before Code H9L

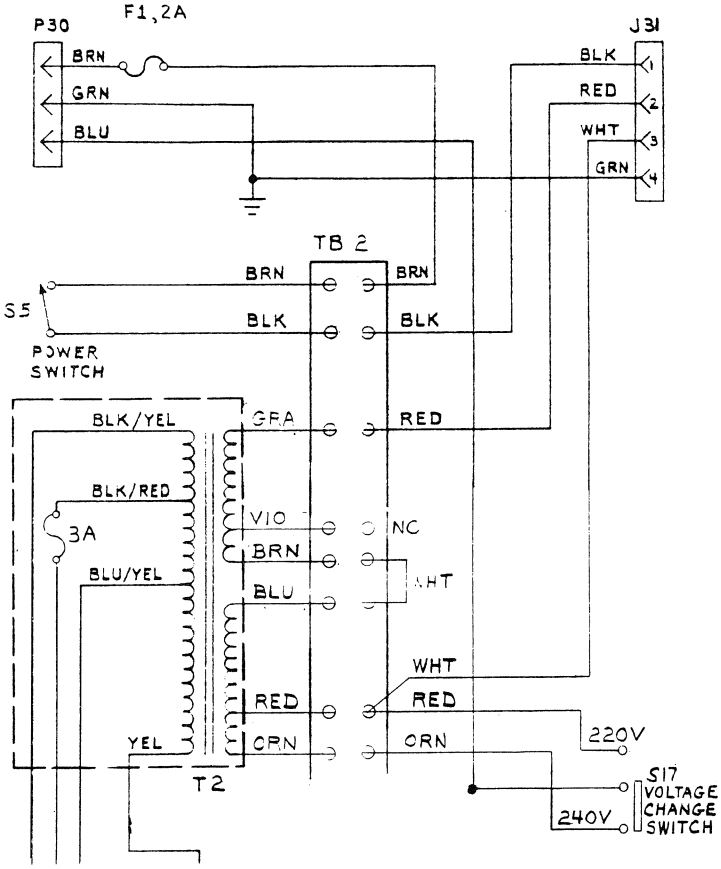

B- Connection changed

Figure 3-26. Export 220/240; To reduce motor temperture.

7. R.F. INTERFERENCE (Figure 3-27).

(Prior to Projector Code C9L and P.C. Board Code C9G). To eliminate RF interference (FM radio pickup) on Record/Play amplifiers, add C152, a 180pf capacitor across pins 4 and 5 of Z-1. Keep the capacitor leads as short as possible.

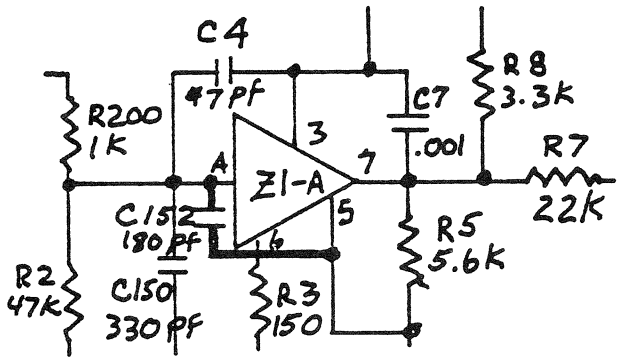

Figure 3-27. R.F. INTERFERENCE

8. TAPE REWIND, ERRATIC STOP(Prior to board code M8F)

To prevent erratic tape deck stop during rewind, the following changes have been made:

a) Play only models:
Change R-93 from 15Kohms to 100Kohms (P/N 406-104-3)
b) Record/Play Models:
Change R-182 from 15Kohms to 100Kohms (P/N 406-104-3)

9. POWER AMPLIFIER Z-2(TCA 940E) (P/N 45162-P1) (Prior to Board Code E9H)

The power amplifier might go into oscillation and burn out. To prevent this when replacing the power amplifier i.c., add a 100uf, 25v capacitor (P/N 42267-P15) across Z-2 pins 1 and 9., C-22 on Play only models, C-42 on Play/Record models.

10. 1000Hz FILTER RESPONSE
To improve the 1000Hz filter response, the following changes have been made:

a) Play only, (no Stop Pulse), prior to board Code J8D, change:

R-30 from 22K ohms to 100 ohms(P/N 406-104-03)
R-31 220K ohms 470 K ohms (P/N 406-373-2)
R-39 3.3K ohms 4.7 K ohms (P/N 406-472-3)

b) Record/Play (no stop pulse), prior to board code L8E, change:

R-120 from 22K ohms to 100K ohms (P/N 406-104-03)
R-121 220K ohms to 470K ohms (P/N 406-474-3)
R-101 3.3K ohms to 4.7K ohms (P/N 406-472-3)

11. RECORDING QUALITY

Play/Record Models. To optomize the record bias of the head in record and add "body to the sound", the following changes have been made.

a) Prior to board Code H8C, change and adjust the following

R-57 from 15K ohms to 7.5 ohms (P/N 406-759-3)
R-59 from 7.5 ohms to 1.0 ohms (P/N 406-109-3)

Adjust VR-3 to obtain 10.5 to 12.4 volts RMS (30-35 volts peak to peak) of bias measured across the lower coil (audio track) of the recording head. Use high impedance A.C. voltmeter or an oscilloscope for this measurement.

b) Prior to board code L8E, change the following:

C-1 from 15pf to .047uf (P/N 415J-P473K-H)
C-30 - Remove
C-25, change (+) from Q 3 to S1-FR.

12. LOW FREQUENCY RESPONSE
(Prior to Board Code M8F, Record/Play Models)

To give more body to the low level frequencies, change the following:

C-20 from .0022uf to .0057uf (P/N 45147-P3)
C-21 .0047uf to .01 uf (P/N 42756-P9)
R-26 from 22K ohms to 15K ohms (P/N 406-153-3)

SECTION IV. CIRCUIT DESCRIPTION

SECTION IV CIRCUIT DESCRIPTION

CARAMATE 3300 PROJECTORS are divided into four basic models.

A. 3320 Model - Play Only, No Stop Pulse

B. 3330 Model - Play Only, With Stop Pulse

C. 3340 Model - Play/Record, No Stop Pulse

D. 3350 Model - Play/Record, With Stop Pulse

The Circuit Descriptions that follow start with the basic 3320 "Play Only" Model and proceed through the more complex 3350 "Play/Record" Model. It is suggested that the entire circuit description for the 3320 model be read before going to the circuit description for the particular model in question. This is because the circuits in all models are very similar and where such is the case, a complete description is given under the 3320 model and is not repeated.

3320 PLAY ONLY-NO STOP PULSE

A. Circuitry in the Caramate 3320 Model may be divided into five basic sections:

1. Power Supply
2. Audio Circuits
3. Advance Cue Detection
4. Tray Control Logic
5. Auto Stop Detector

NOTE: Component References may skip to Adjacent Diagrams. See Fig. 6-1 & 6-2 for complete schematic

1. POWER SUPPLY 120V, 60 Hz. (Figure 4-1)

Switch (S-7), The Main Power Switch located on the front of the projector, Controls AC power to all functions.

Switch (S-6), Is a thermal sensor mounted in the lamp housing near the projection lamp. If for any reason the temperature in the lamp housing rises above 200 F, the contacts of the sensor open and remove power from the entire projector. This prevents damage to the projector due to overheating. Once the lamp housing cools to about 150 F, the contacts of the sensor reclose and again apply power to the projector.

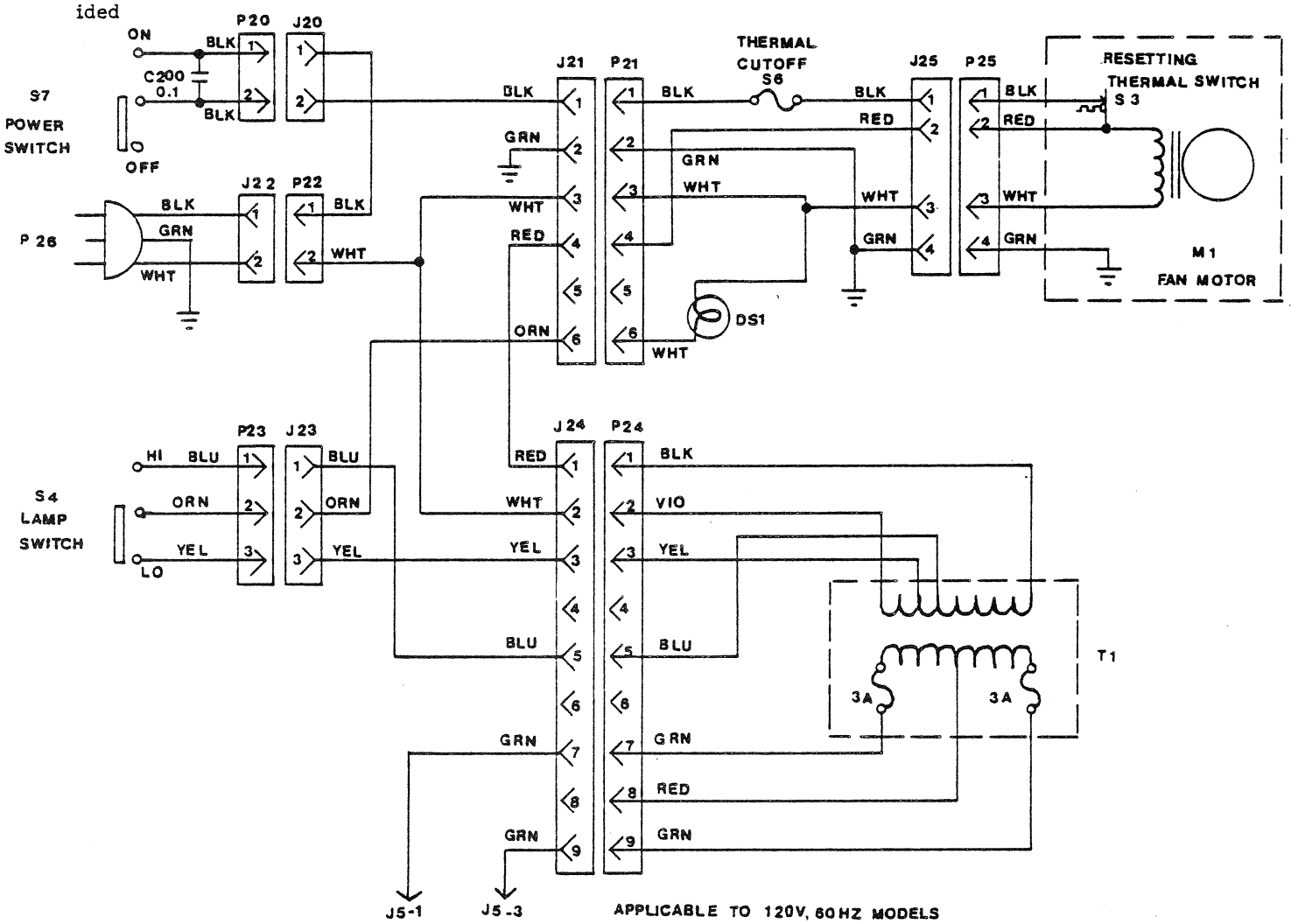

Figure 4-1, AC POWER SUPPLY

SWITCH (S-3) Is a thermal sensor which is built into the fan motor (M-1). If for any reason the temperature in the blower motor area rises above 221 F, the contacts of this sensor open and remove power from the entire projector. Upon sufficent cooling, the contacts close and again apply power to the projector.

Switch (S-4) Is the "Hi-Lo" lamp switch, located on the left side of the projector. In the "Hi" position this switch applies approximately 18VAC to the lamp (DS-1) while the low position applies approximately 15VAC. Both positions apply voltage below the rated voltage of the lamp to insure increased lamp life.

TRANSFORMER (T-1) Supplies the correct lamp voltages from its primary winding as well as approximately 17VAC from its secondary winding for powering the electronic circuit board through pins 1 and 3 of (J-5). The two 3 amp fuses in the secondary are built into the transformer but can be replaced by carefully cutting open the outer covering of the transformer winding and soldering in new LKB-3 fuses (P/N SS359).

220/240V, 50Hz (Figure 4-2)

Switch (S-5) The main power switch located on the front of the projector, controls AC power to all functions.

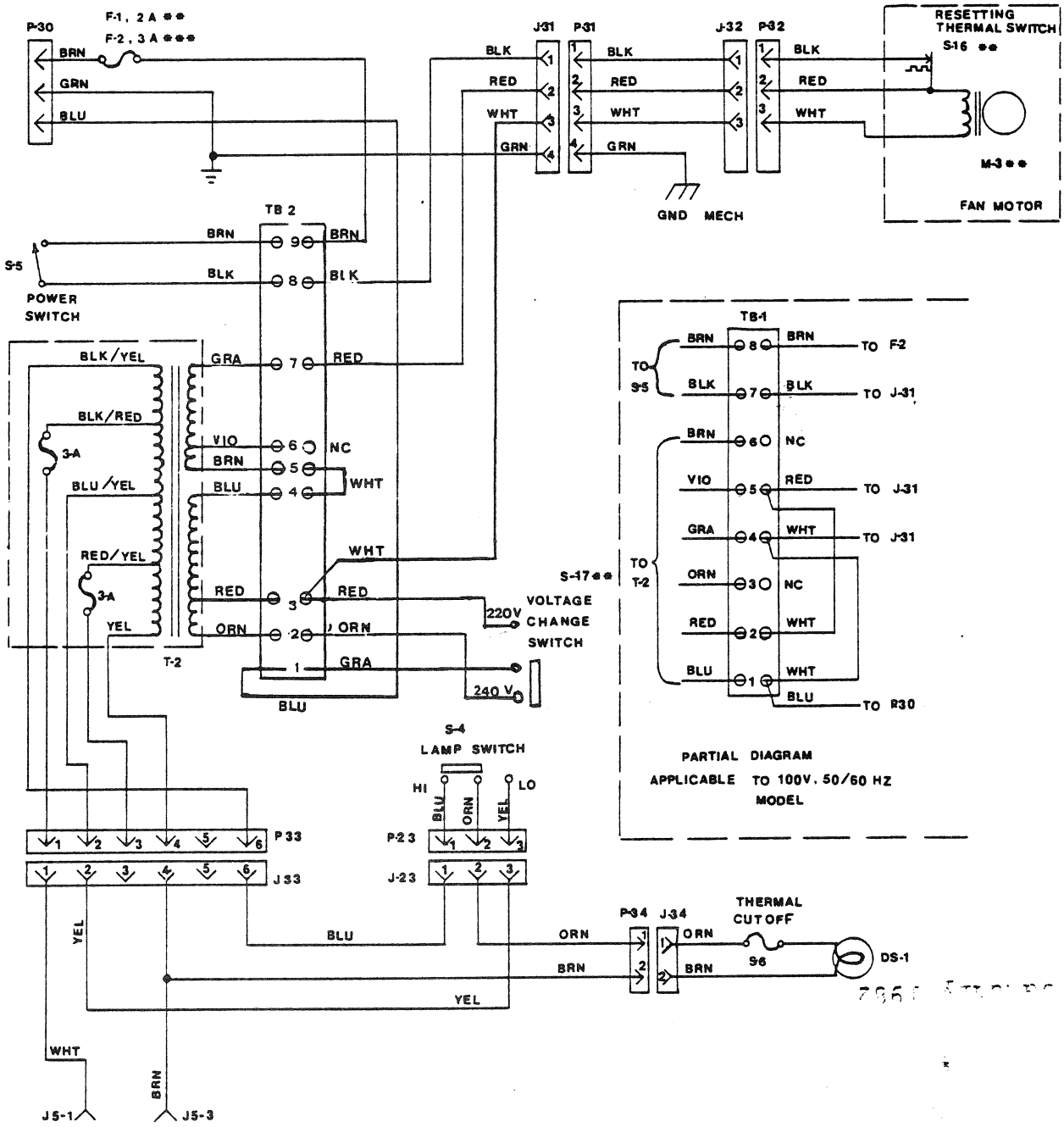

to DC POWER SUPPLY

APPLICABLE TO 220/240V, 50 HZ MODEL

Figure 4-2. AC POWER SUPPLY

Switch (S-6) Is a thermal sensor which functions identically as switch S-6) in the 120V, 60 Hz models. However rather than removing power from the entire projector as in the 120V, 60 Hz models, this thermal switch removes power from the projection lamp (DS-1) only in the event of overheating.

Switch S-16) Is a thermal sensor which functions identically as switch (S-3) in the 120V, 60 Hz projectors.

Switch (S-4) Serves the same function as does switch (S-4) in the 120V, 60 Hz projectors.

Switch (S-17) Is the input voltage selection switch located inside the slide tray storage compartment. This switch simply changes the primary tap selection on transformer (T-2) to allow operation from either 220V or 240V.

FUSE (F-1) Is simply a fuse in the live side of the supply line. It is located inside the slide tray storage compartment.

Transformer(T-2) Is a multiple tap transformer which allows for selection of different voltages. It also supplies a number of different voltages from its secondary for powering the projection lamp and the electronic circuit board. The two 3 amp fuses in the secondary circuit which supplies power for the electronic circuit board are built into the transformer and are replaceable as in the case with transformer (T-1) in the 120V, 60 Hz models.

100V, 50/60 Hz (Figures 4-2 & 4-3)

The AC power supply for the 100V, 50/60 Hz models is identical to that used in 220/240V, 50 Hz models with two exceptions. The wiring of (TB-1) is such that the primary windings of of Transformer (T-2) are correctly wired for a 100V AC input. Also the circuit for the fan motor differs in providing a separate ground wire through Pin 4 of (J32) See Figure 4-3.

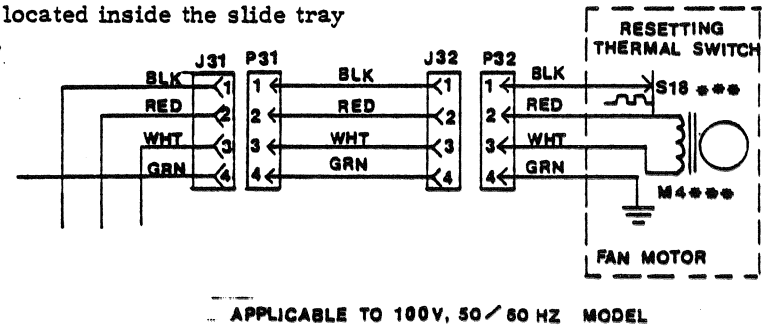

Figure 4-3. Fan Motor Circuit

DC POWER SUPPLY (Figure 6-4)

BRIDGE RECTIFIER (D-30) Supplies a +20 Volt unregulated voltage for the Audio Output Amplifier Chip (Z-2)(Figure 4-7), The Tray Advance Solenoid. Circuit (SO-1) and (Q-6)(Figure 4-12), the Tape Deck Motor Circuit (M-2) and (Q-8) Figure (4-17), The Auto Stop Circuit (Q9, Q10, Q11) and (SO-2) (Figure 4-17), and The Voltage Regulator Circuit (Z-10) (Figure 4-4).

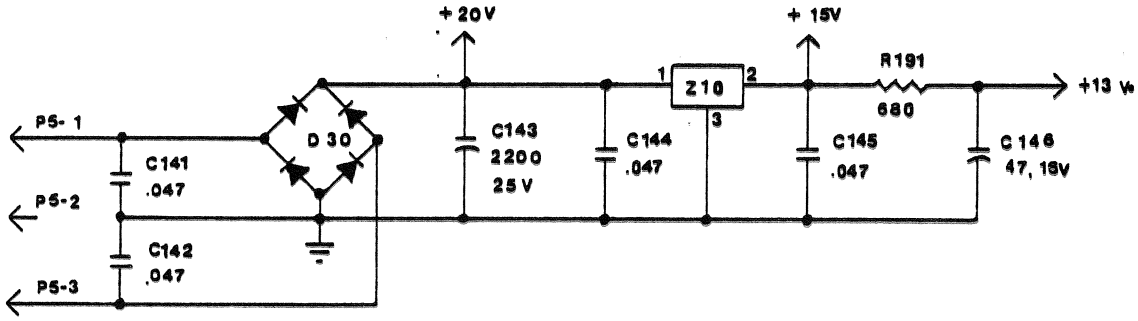

Figure 4-4. 3320 & 3330 DC Power Supply

VOLTAGE REGULATOR (Z-10) Supplies a +15 volt regulated voltage for the Advance Cue Detection circuits (Z-3A-D)(Figures 4-8 & 4-9) and the Tray Control Logic Circuits (Z-5) and (Z-6) (Figure 4-10). It also supplies a +13 Volt regulated voltage for the Audio preamplifier (Q-1), (Q-2), and (Q-3) (Figure 4-5) and the Audio High Pass Filter (Q-4) and (Q-5) (Figure 4-6).

2. AUDIO CIRCUITS

Audio signals recorded on tracks 1 and 2 of the magnetic tape are picked up by the tape head (H-1, CH-1) and fed into the Preamplifier, consisting of (Q-1, (Q-2) and (Q-3) (Figure 4-5).

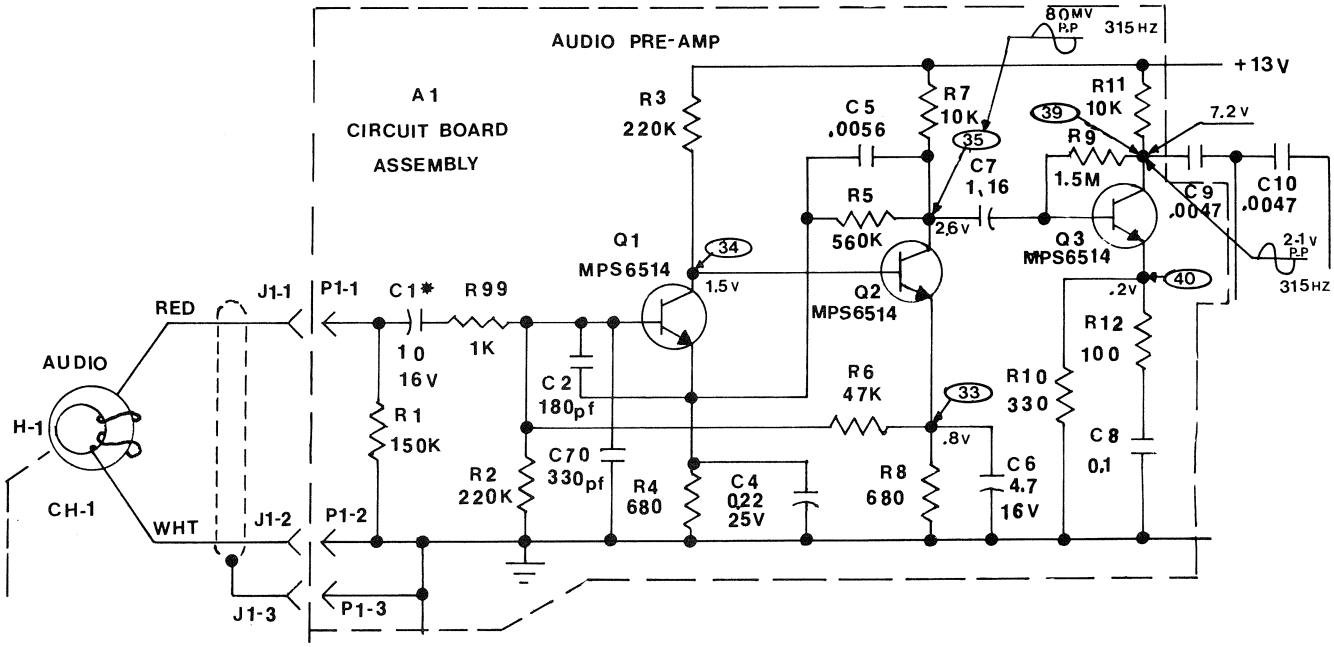

Figure 4-5. Audio Preamplifier

The amplified signals are then fed into the high pass filter circuit (Q-4) (Figure 4-6) where all frequencies below 200Hz are effectively rejected. The remaining frequencies above 200Hz are then fed into Emitter-Follower (Q-5) and subsequently into the Tone/Volume control network.

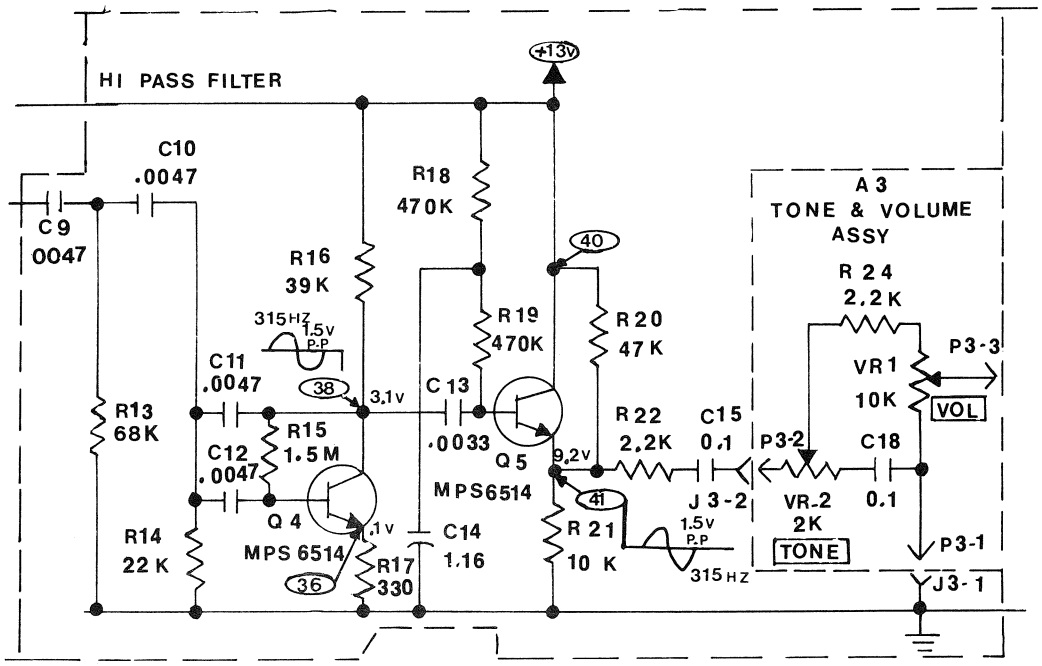

Figure 4-6. Audio High Pass Filter

From the Tone/Volume Control Network the signals are fed into the output amplifier chip (Z-2) which amplifies them sufficiently (Continuous 5 watt R.M.S. output possible) to drive the built in speaker (LS-1) (Figure 4-7).

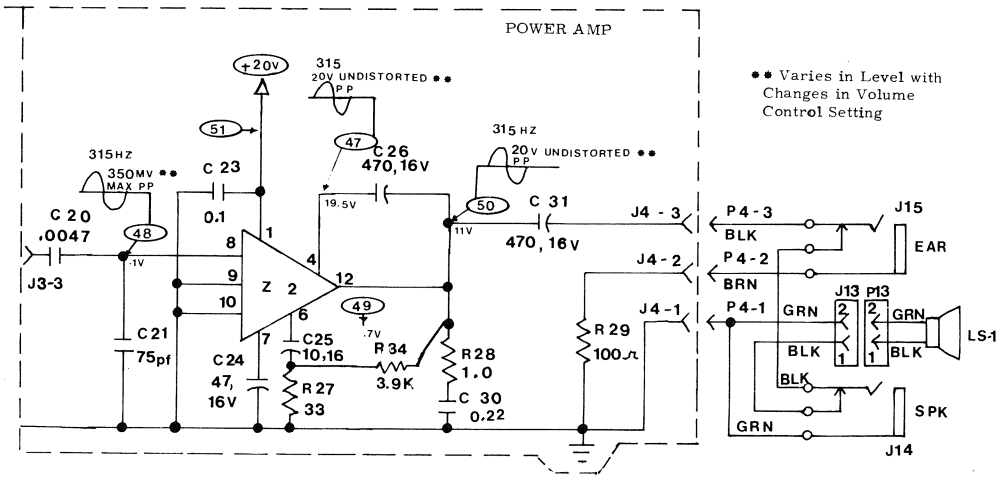

Figure 4-7. Audio Power Amplifier

If desired, an external speaker having an impedance of 8 ohms may be plugged into the speaker jack (J-14), which is mounted on the left side of the projector. Doing so removes the built in speaker (LS-1) from the circuit. It is also possible to plug a low impedance earphone into the "EAR" jack (J-15), also located on the left side of the projector. Doing this removes both the built-in speaker (LS-1) and the speaker jack (J-14) from the circuit (Figure 4-7).

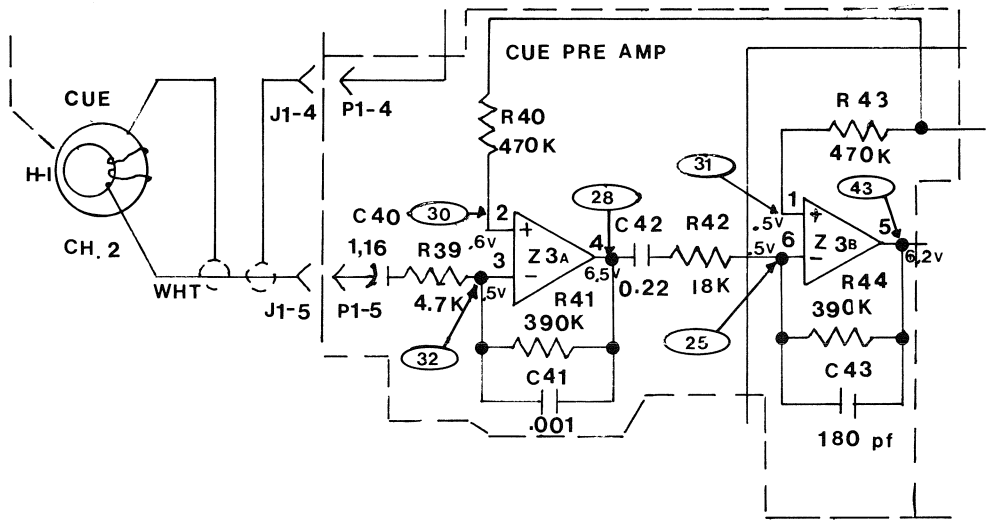

Figure 4-8. Cue Preamplifier

3. ADVANCE CUE DETECTION CIRCUITS

The 1000 Hz advance cue pulses recorded on tracks 3 and 4 of the magnetic tape are picked up by the second channel of the tape head (H-1, Ch. 2) and fed into the cue preamplifier consisting of (Z-3A) and (Z-3B)(Figure 4-8).

The amplified cue pulses are then fed into the 1000 Hz filter circuit consisting of (Z-3C) and (Z-3D). This circuit will respond to only 1000 Hz signals when the Sensitivity and Tuning are adjusted properly by means of (VR-3) and (VR-4) respectively (Figure 4-9).

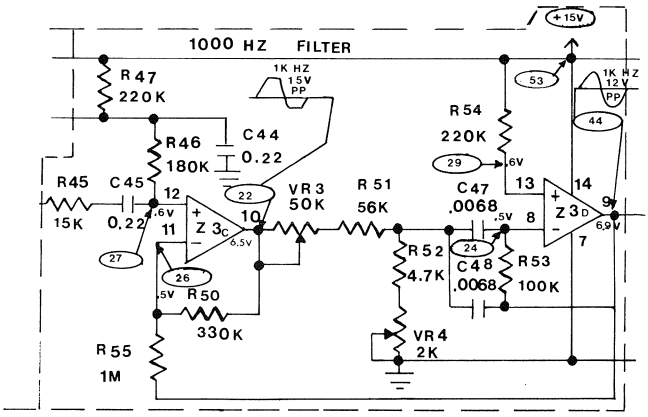

Figure 4-9 1000 Hz filter

The output of the 1000 Hz filter circuit (Pin 9 of (Z-3D) is a relatively undistorted 12 volt peak to peak(4v. RMS) 1000 Hz Sine Wave. This output is fed into the Tray Control Logic circuits consisting of (Z-5), (Z-6) and (Q-6) (Figures 4-10 & 4-12).

4. TRAY CONTROL LOGIC CIRCUITS

NOR Gates (Z-5A) and (Z-5B) are actually used as inverters in this circuit. This is accomplished by connecting one input of each Pin 9 of (Z-5A) and pin 13 of (Z-5B), to ground (Logic Low). All control for these NOR gates now reverts to the other input Pin 8 of (Z-5A) and Pin 12 of (Z-5B). (Figure 4-10).

The undistorted 1000 Hz signal leaving (Z-3D) suffers some distortion at pin 8 of (Z5A), the input of the first NOR GATE. This distortion is of no consequence since this signal is used only to turn (Z-5A) ON and OFF at a rate of 1000 Hz. In turn (Z-5A) turns (Z-5B) ON and OFF at a rate of 1000 Hz. Thus whenever a 1000 Hz signal appears at Pin 8 of (Z-5A), a 1000 Hz positive going square wave appears at Pin 11 of (Z-5B). This is accomplished as follows.

Logic Lows -L
and Highs -H
Indicated are those existing with no signal applied.

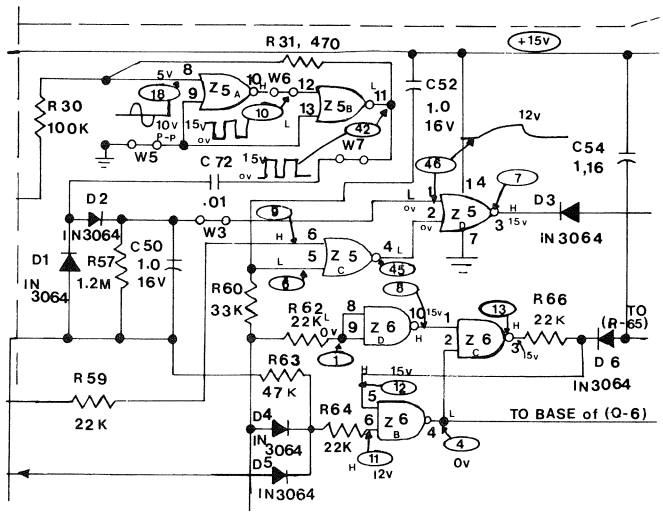

Figure 4-10. Cue Pulse Tray Control Logic

When the signal on Pin 8 of (Z-5A) goes more positive (Logic High), (Z-5A) starts conducting and its output, Pin 10, switches from a logic High (+15V) to a logic low (0V). Since pin 10 of (Z5A) and pin 12 of (Z5B) are common, this logic low condition causes (Z-5B) to stop conducting resulting in a logic High (+15V) at its output, pin 11.

When the signal on pin 8 of (Z-5A) goes less positive (Logic Low), (Z-5A) stops conducting and its output switches from a logic low (0V) to a Logic High (+15V). This causes the condition of (Z-5B) to reverse and a Logic Low (0V) appears at its output.

Of course this all occurs at a rate of 1000 Hz (See Figure 4-11).

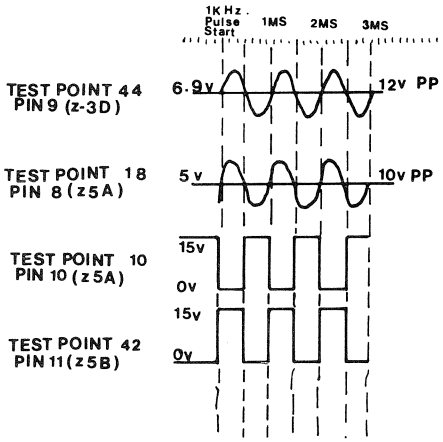

Figure 4-11. Tray Control Logic Waveforms

The positive going 1000 Hz square wave output from pin 11 of (Z-5B) is now fed into the rectifying circuit made up of (D-1), (D-2), (R-57) and (C-50). Here any negative transients are shorted to ground by (D-1) and only the positive portion of the signal is passed on by (D-2) causing (C-50), to charge to a positive 12 Volts. This results in a logic high on pin 1 of NOR gate (Z-5D) causing (Z-5D) to start conducting to produce a logic low at its output, pin 3. This low promotes conduction through (D-3) and (R-61) causing a logic low on pins 12 and 13 of NAND GATE (Z-6A).

NAND GATE (Z-6A) now stops conducting and a logic high appears at its output, Pin 11. (NAND GATE (Z-6A) is wired so it actually functions as an inverter in this circuit). This high is immediately coupled through (R-67) and (C-55) to the base of transistor (Q-6) causing (Q-6) to conduct through the tray advance solenoid (SO-1). The solenoid now operates engaging the clutch in the tray advance mechanism and allowing the mechanism to advance one slide, (Figure 4-12).

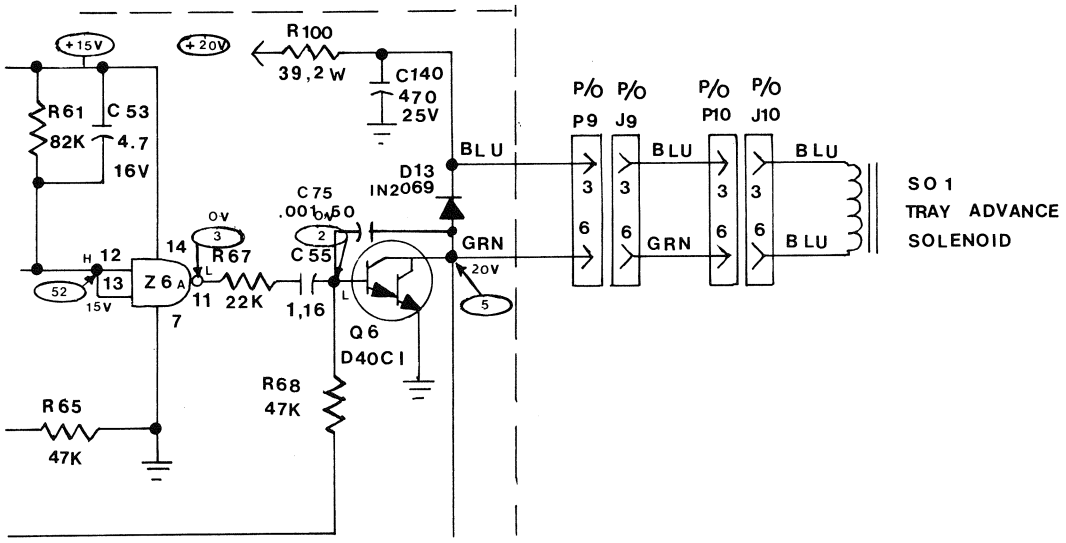

Figure 4-12. Tray Control Logic

The advance mechanism will advance only one slide regardless how long the 1000 Hz advance pulse is sustained at the input of the cue detection circuits (Figure 4-8 and 4-9). This is due to the charging action of (C-55). As stated, the logic high which appears at pin 11 of (Z-6A) is coupled to the base of (Q-6) through (R-67) and (C-55). However, as soon as (Q-6) starts conducting, (C-55) starts charging through the emitter base circuit of (Q-6). After 120 milliseconds, (C-55) will charge to a point where the positive voltage on the base of (Q-6) is not positive enough to sustain conduction through (Q-6) and (Q-6) shuts off. The tray advance solenoid releases and the engaged clutch on the tray advance mechanism continues through one cycle and clutches again.

If the 1000 Hz cue signal is sustained continuously, the logic high remains on pin 11 of (Z-6A), (C-55) remains charged, (Q-6) remains cut off, and the tray advance solenoid remains released. This condition will not change until the 1000 Hz cue signal is removed allowing the logic voltage to go low again at pin 11 of (Z-6A) and permitting (C-55) to discharge. This prepares the circuit to react to the next 1000 Hz cue pulse. (See Figure 4-13).

The 120 millisecond timing is critical to insure that the slide tray advances rather than reverses. If the tray advance solenoid is held operated too long, it will condition the front/rear cam so the index arm moves the slide tray in reverse rather than advance.

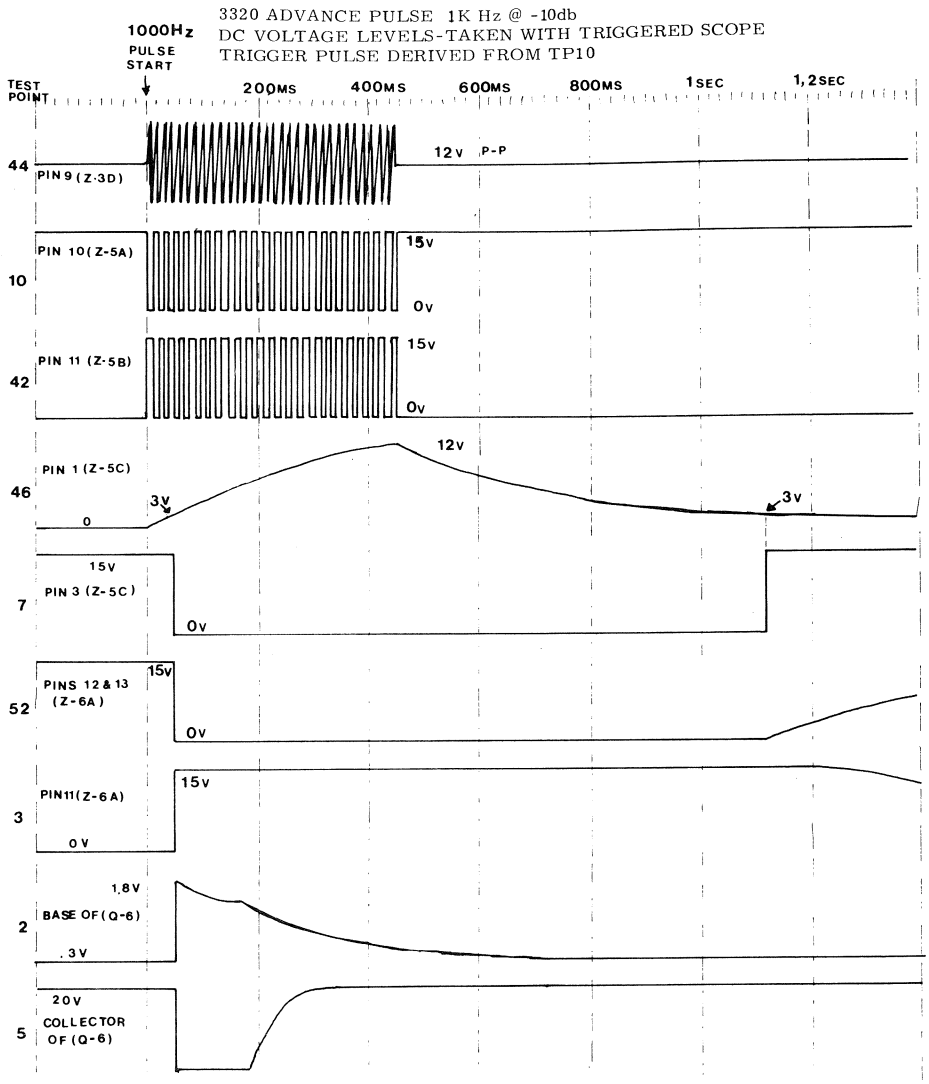

Figure 4-13 3320 ADVANCE PULSE WAVEFORMS

a. MANUAL ADVANCE

The logical starting point in a discussion of the manual advance feature is to call attention to the logic condition of pins 5 and 6 of NOR GATE (Z-5C). Pin 5 is held at a logic low by the ground connected to it through the normally closed contacts of the mechanism cam swtich (S-13) and (R-60). Pin 6 is held at a logic high by the +15 Volt supply connected to it through (R-70) and (R-59). The output of this NOR GATE under these conditions is a logic low (0 Volts). This logic low is also felt at pin 2 of (Z-5D). Since pin 1 of (Z-5D) is also at a logic low, the output at pin 3 of (Z-5D) is a logic high (Figure 4-14).

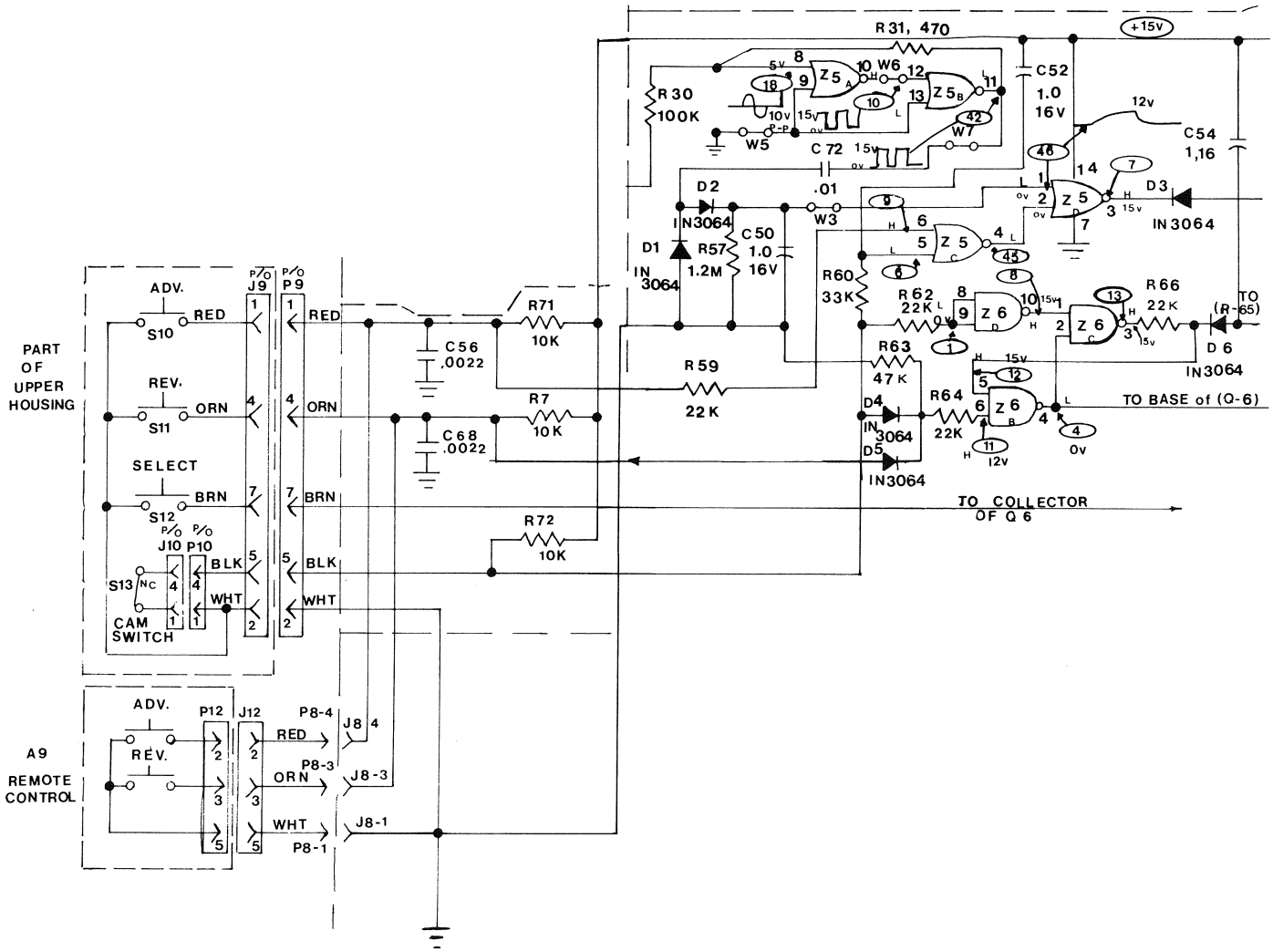

Figure 4-14. Manual Advance and Manual Reverse Tray Control Logic

When the manual advance button on the upper left hand side of the projector or on the hand held remote control is depressed, a ground is connected to the junction of (R-70) and (C-56). This ground is coupled to pin 6 of (Z-5C) through (R-59). This means that the logic high which was on pin 6 has now become a logic low and (Z-5C) stops conducting since pin 5 is also at a logic low. A logic high (+15 Volts) now appears at pin 4 of (Z-5C) and at Pin 2 of (Z-5D). (Z-5D) now starts to conduct and the logic high originally on pin 3 of (Z-5D) now becomes a logic low. This low is coupled to pins 12 and 13 of (Z-6A) through (D-3) as described in the discussion on advancing with a 1000 Hz cue pulse. The remaining sequence of events in (Z-6A), (R-67), (C-55), (Q-6) and (SO-1) are indenticals when a 1000 Hz cue pulse is used to advance a slide. (See Figure 4-12 and related circuit description).

One difference exists between advancing with a 1000 Hz cue pulse and advancing with manual advance buttons. Advancing with a 1000 Hz cue pulse will result in only one slide advance per pulse regardless how long the pulse is sustained. Advancing with either manual advance button will result in continual slide advancing if the button is held depressed. This is due to the action of the advance mechanism cam switch (S-13 and NOR GATE (Z-5C).

As stated previously, depressing the advance button places a logic low on pin 6 of (Z-5C) causing it to stop conducting and starting the series of logic voltage changes which results in a slide change. If the button was held depressed and nothing else happened, (C-55) would eventually charge, as in the case when advancing with a 1000 Hz cue pulse, and only one slide would advance. However about 400 ms after the tray advance solenoid operates, the cam switch (S-13) is opened by the advance mechanism cam. This impresses a logic high (+15V) through (R-72) and (R-60) on pin 5 of NOR GATE (Z-5C) causing it to conduct and produce a logic low at its output, pin 4. This low is also impressed on pin 2 of (Z-5D) and coupled with the low already on pin 1 of (Z-5D) causes (Z-5D) to stop conducting. A logic high thus appears at pin 3 of (Z-5D) and is coupled to pins 12 and 13 of (Z-6A) (Figure 4-12), producing a low at pin 11 of (Z-6A). This allows (C-55) to discharge to its normal state when no advance signal of any kind is present. Thus (C-55)is conditioned to react to the next advance signal.

With the advance button held depressed, this signal appears when the advance mechanism cam rotates enough to allow the cam switch (S-13) to close again. This closure puts a ground (Logic low) on pin 5 of (Z-5C). Coupled with the low still on pin 6 of (Z-5C) because of the depressed advance button, this low on pin 5 causes (Z-5C) to stop conducting. A high appears at its output causing a low at the output of (Z-5D) and a high at the output of (Z-6A), which in turn causes (Q-6) to conduct through solenoid (SO-1) engaging the clutch on the advance mechanism to advance another slide. This sequence of events will continue as long as the advance button is held depressed. When the advance button is released, the original logic high reappears on pin 6 of (Z-5C) causing it to remain conducting and in turn holding (Z-5D) shut off to await the next advance signal. (See Figure 4-15 for manual advance waveforms).

MANUAL REVERSE

Three NAND GATES (Z-6B), (Z-6C) and (Z-6D) are used in connection with the manual reverse function of the CARAMATE 3320. Both (Z-6B) and (Z-6C) function as NAND GATES while (Z-6D) is wired as an inverter by tying its two inputs together. (Figure 4-14). When power is initially applied to the circuit board, C-54 charges through (R-65) and impresses a positive pulse on Pin 5 of (Z-6B) through (D-6). (Figures 4-12 and 4-14). At the same time a positive 12 volts is impressed on pin 6 of (Z-6B) by the +15 Volt power supply conducting current through (R-63), (D-5) and (R-71). These two positive voltages represent logic highs and cause (Z-6B) to conduct producing a logic low at its output, pin 4. This low is coupled to pin 2 of (Z-6C) forcing it to remain turned off to produce a logic high (+15 V) at its output, pin 3. This high is coupled back to pin 5 of (Z-6B) and together with the high on pin 6 of (Z-6B) holds (Z-6B) in its conducting condition, sustaining the logic low at its output which in turn holds (Z-6C) cut off and prevents (Q-6) from conducting through (SO-1). This action serves two functions:

1. Establishes the proper condition for (Z-6B) and (Z-6C) to function properly for manual reverse.

2. Prevents the projector from cycling one slide in reverse when it's first turned on.

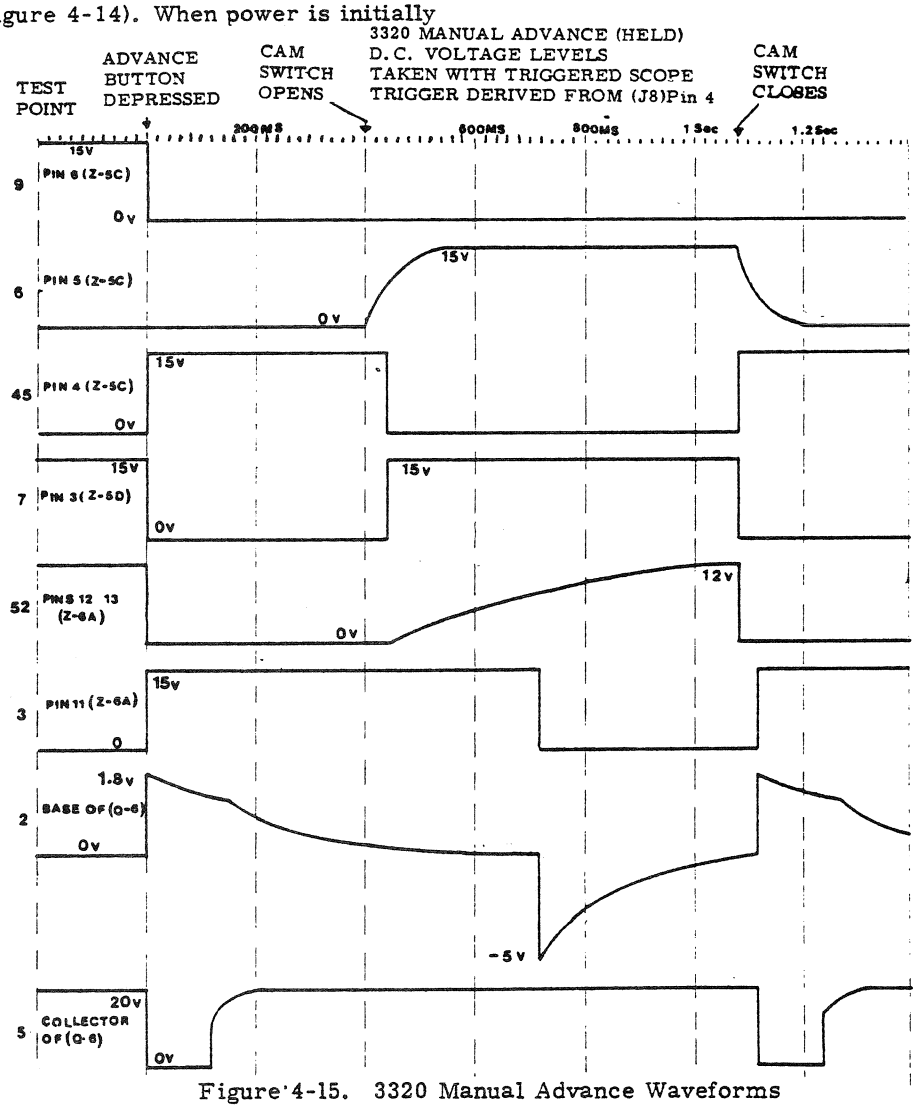

Figure 4-15. 3320 Manual Advance Waveforms

(Z-6D) is conditioned by the ground (Logic Low) applied to pins 8 and 9 through the normally closed contacts of the advance mechanism cam switch (S-13). The output of (Z-6D) is therefore a logic high (+15V) which is coupled to pin 10 of (Z-6C).

Depressing the reverse button on the upper left hand side of the projector or on the hand held remote control puts a ground on the junction of (C-68) and (R-71). This results in stopping current flow through (R-63) and (D-5). The voltage on Pin 6 of (Z-6B) thus disappears and Pin 6 is connected to ground through (R-64) and (R-63). This changes the logic condition on Pin 6 from high to low and stops (Z-6B) from conducting. A logic high now appears at Pin 4 of (Z-6B) and is coupled to Pin 2 of (Z-6C) and also to the base of (Q-6) through (R-68). This high causes (Q-6) to conduct for approximately 400ms through the tray advance solenoid (SO-1). The solenoid thus operates and allows the tray advance clutch to engage and start through a tray advance cycle. The 400ms conduction time for (Q-6) is necessary so front/rear cam will be properly conditioned to cause the index arm to move the slide tray in reverse rather than forward.

The 400ms conduction time for (Q-6) is established by (Z-6C), (Z-6D) and the advance mechanism cam switch (S-13). As mentioned above, the logic high at the output of (Z-6B) when the reverse button is depressed, appears on pin 2 of (Z-6C) as well as the base of (Q-6). Coupled with the logic high already on Pin 1 of (Z-6C) this high causes (Z-6C) to conduct and produce a logic low at its output. This low is coupled back to pin 5 of (Z-6B) and holds (Z-6B) cut off with the result that the logic high remains at the output of (Z-6B) to keep both (Z-6C) and (Q-6) conducting.

Approximately 400ms after the tray advance solenoid operates, the contacts of the advance mechanism cam switch (S-13) open. This removes the ground from pins 8 and 9 of (Z-6D) and allows the (+15V) power supply to conduct current through (R-63), (D-4) and (R-72). A +12 Volts now appears on pins 8 and 9 of (Z-6D) and pin 6 of (Z-6B). This +12 Volts represents a logic high and causes (Z-6D) to conduct resulting in a logic low at its output, pin 10. Pin 1 of (Z-6C) now also goes to a logic low condition and (Z-6C) stops conducting to produce a logic high at

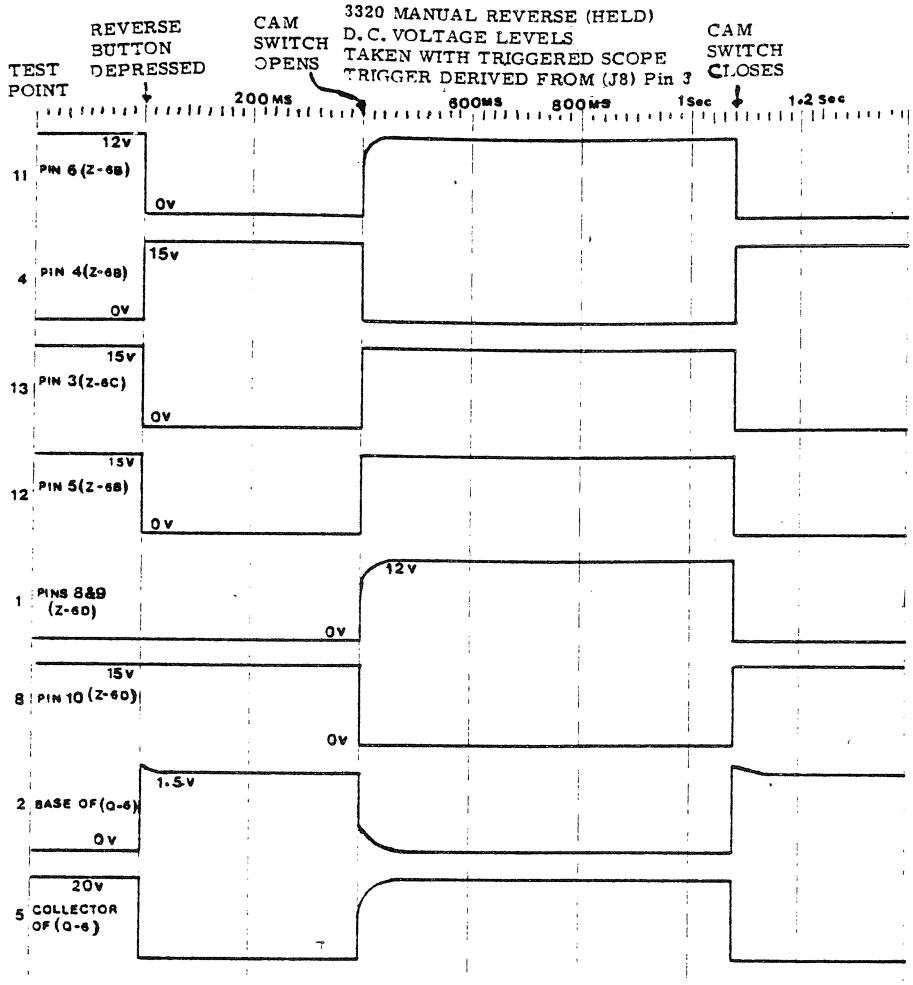

Figure 4-16. 3320 Manual Reverse Waveforms

its output, pin 3. This high is coupled back to pin 5 of (Z-6B) and, together with the high impressed on pin 6 by the open cam switch causes (Z-6B) to conduct. A logic low now appears at the output of (Z-6B) and is coupled to the base of (Q-6) and to pin 2 of (Z-6C). Thus (Q-6) stops conducting, the tray advance solenoid releases and (Z-6C) is held cut off. The advance mechanism clutch will finish its cycle and release with the result that the projector will have moved the slide tray one slide in reverse.

If either manual reverse button is held depressed, the entire cycle described above will repeat itself when the contacts of the advance mechanism cam switch (S-13) close and reestablish the ground on pin 6 of (Z-6B) and pins 8 and 9 of (Z-6D). (See Figure 4-16) for manual reverse waveforms).

SELECT

Depressing the select button connects a ground to the collector of (Q-6) which provides a conduction path for the tray advance solenoid (SO-1). The solenoid will thus remain operated as long as the select button is held depressed. (Figures 4-12 & 4-14). The continuously operated solenoid operates a mechanical linkage which prevents the advance mechanism clutch from remaining engaged through a complete cycle of slide advance. This linkage releases the clutch as soon as the slide lifter reaches its uppermost position. The select button also disengages the index arm so the slide tray will not advance or reverse.

5. AUTO-STOP DETECTOR AND TAPE DRIVE

The Auto-Stop detector circuit consists of transistors (Q-9), (Q-10) and (Q-11), Diode (D-12), Auto-Stop Solenoid (SO-2) and the tape deck spindle switch (S-14), mounted under the take-up spindle on the tape deck (Figure 4-17).

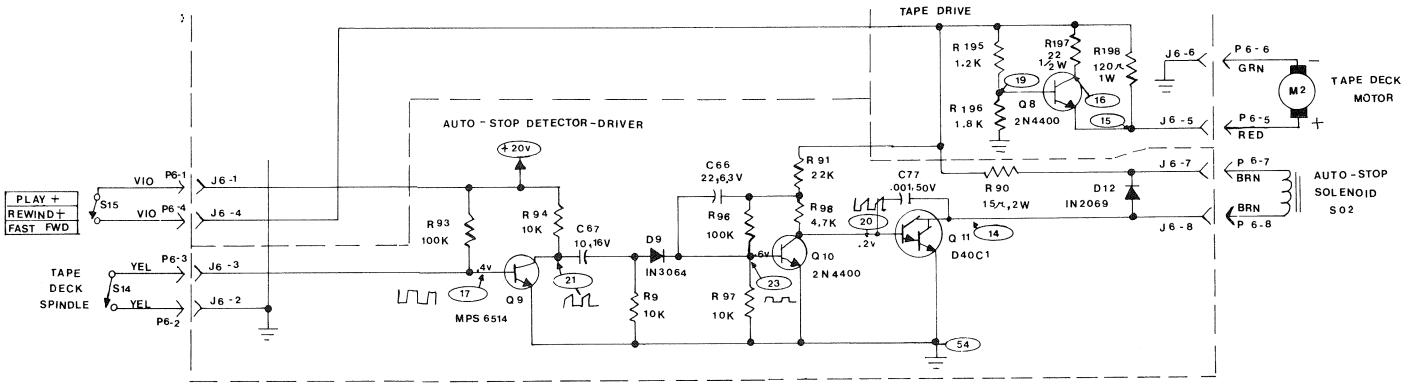

Figure 4-17. Auto-Stop Detector-Driver

With a tape cassette in the projector and either the Play, Rewind or Forward button depressed, tape is transported through the projector, the take up spindle rotates and the spindle switch (S-14) initiates a signal which keeps (Q-11) shut off and prevents the auto-stop solenoid (SO-2) from operating and releasing the tape transport mechanism.

Since the spindle switch (S-14) continuously opens and closes when the take-up spindle rotates, it applies a square wave which fluctuates between ground and +.8 Volts to the base of transistor (Q-9). The result of this is the turning of (Q-9) off and on to produce an amplified, slightly distorted square wave at its collector. This square wave is rectified by (D-9) and a square wave greatly reduced in amplitude but riding on a positive D.C. Voltage (+.7V), is applied to the base of (Q-10). (Q-10)is now biased to operate close to saturation and the small amplitude square wave applied to to its base either allows it to conduct to saturation (positive going portion of square wave) or to reduce its conduction (negative going portion of square wave). When (Q-10) conducts at saturation, the voltage at its collector is very low - about +.06 Volts D.C. This voltage holds (Q-11) cut-off and the auto-stop solenoid (SO-2 is prevented from operating. When the negative portion of the square wave appears at the base of (Q-10) and reduces its conduction, its collector voltage immediately jumps to about +.2 volts D.C. and then gradually increases to about +.6 volts D.C. because of the charging action of C-66). However, neither voltage is sufficient to bring (Q-11) out of cut-off. At this point in time the positive portion of the square wave appears at the base of (Q-10) and forces it into saturation, reducing the collector voltage and holding (Q-11) cut off. So, as long as tape is transported through the machine, (Q-11) is held cut-off and the auto-stop solenoid cannot operate to release the tape transport. (See Figure 4-18 for auto-stop waveforms).

When the end of the tape is reached, either in a forward or reverse direction, the take-up spindle stops and the spindle switch ceases applying the square wave to the base of(Q-9). The signal disappears from the collector of (Q-9) and the base of (Q-10) and the voltage on the base of (Q-10) drops. The voltage on the collector of (Q-10) immediately increased to +.2 Volts D.C. and then gradually increases due to the charging action of (C-66). Now,however, since there is no signal present, (C-66) continues charging to allow the voltage on the connector of (Q-10), Base of (Q-11) to go past +.6 volts.

When the voltage reaches approximately 1.2 volts D.C. (Q-11) conducts through the auto-stop solenoid (SO-2) causing it to operate and activate the mechanism which releases the tape transport mechanism. This action also removes power from (Q-10), (Q-11) and the tape deck motor circuits.

Transistor (Q-8) is placed in the circuit to provide a relatively constant voltage for the tape drive motor (M-2) should the supply voltage vary above or below its nominal value or should the tape drive motor be presented with varying load conditions.

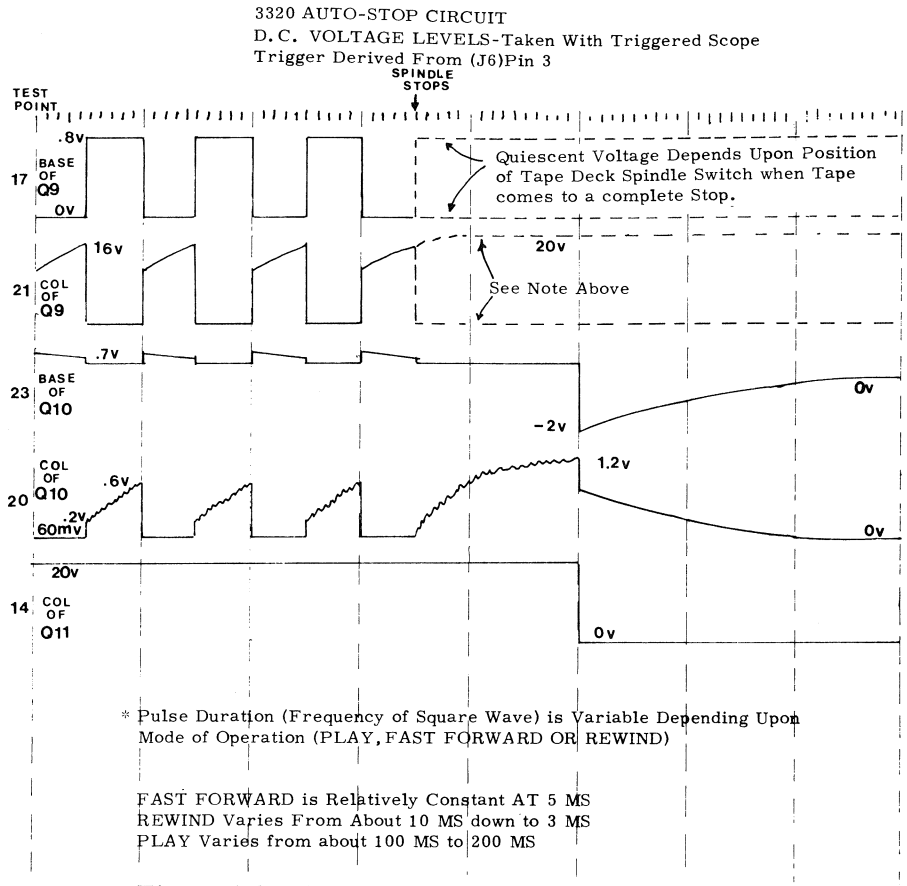

Figure 4-18 3320 AUTO-STOP CIRCUIT WAVEFORMS

3330 PLAY ONLY - WITH STOP PULSE

Circuitry in the Caramate 3330 Models may be divided into seven basic functions. These include the five functions previously discussed as part of the Caramate 3320 Models as well as two additional functions associated with the stop pulse feature:

6. Stop Pulse Detection

7. Tape Drive Control Logic

Identical circuits previously described are as follows:

1. Power Supply Section IV, Para. A.1)

2. Audio Circuits (Section IV, Para. A.2)

3. Advance Cue Detection Circuits (Section IV, Para. 3)

4. Tray Control Logic (Section IV, Para. 4)
   a. Manual Advance
   b. Manual Reverse
   c. Select

5. Auto-Stop Detector (Section IV, Para. 5)

Additional circuits or circuits which differ from those previously employed.

1. Tray Control Logic

2. Stop Pulse Detection

3. Tape Drive Control Logic

Note: Component References may skip to adjacent or other diagrams. See Figure 6-18 for complete schematic.

1. TRAY CONTROL LOGIC CIRCUITS

The Tray Control Logic Circuits in the 3300 models are identical to those in the 3320 Models with one exception. The output from the 1000Hz Filter, Pin 9 of (Z-3D), in the 3330 Models is fed into an advance ramp detector (A-4A) (Figure 4-19), instead of two NOR GATES (Z-5A) and (Z-5B) and a rectifier circuit (D-1) and (D-2) as in the 3320 models (See Figure 4-10).

Locig Lows - L
and Highs - H
Indicated are those existing with no signal applied.

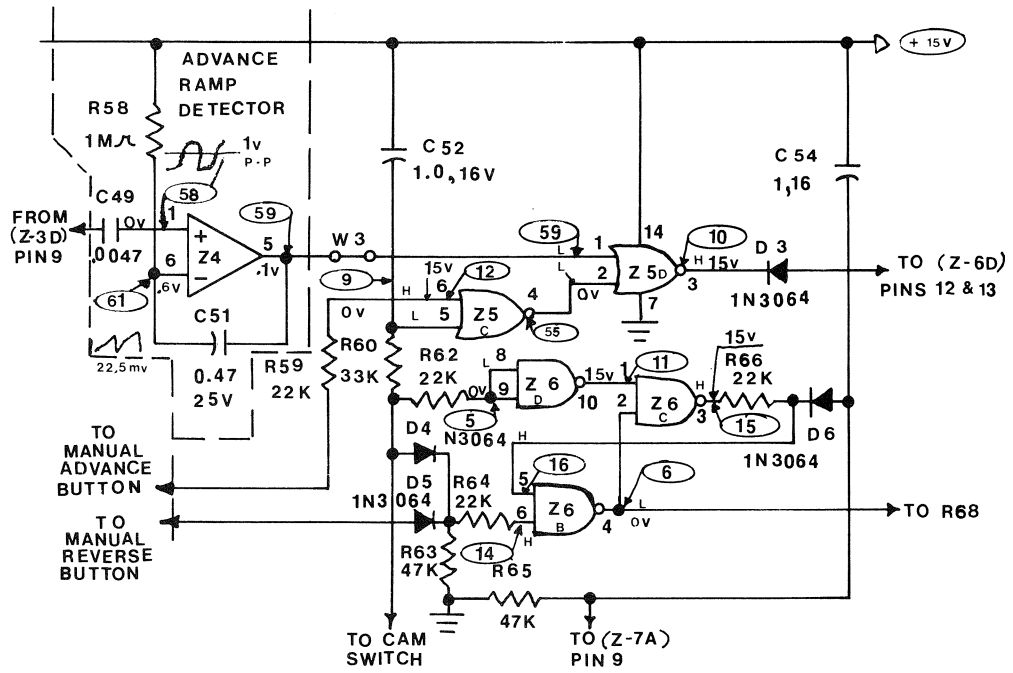

Figure 4-19. Cue Pulse Tray Control Logic

This is done since (Z-5A) and (Z-5B) are now needed for the tape drive control logic circuits (See Figure 4-23) and only three of the four sections of (Z-4) are needed for the Stop Pulse Detection Circuits (See Figure 4-21).

With the 1000Hz input to Ramp Detector (Z-4A), its output is a gradual increasing positive voltage, much the same as that produced by the rectifier Circuit (D-1) and (D-2) in the 3320 models. (See Figure 4-13 and 4-20). This positive voltage is recognized by NOR GATE (Z-5D) as a logic high causing it to conduct and produce a logic low at its output, Pin 3. From this point, the operation of the remainder of the circuit is identical to that in the 3320 models.

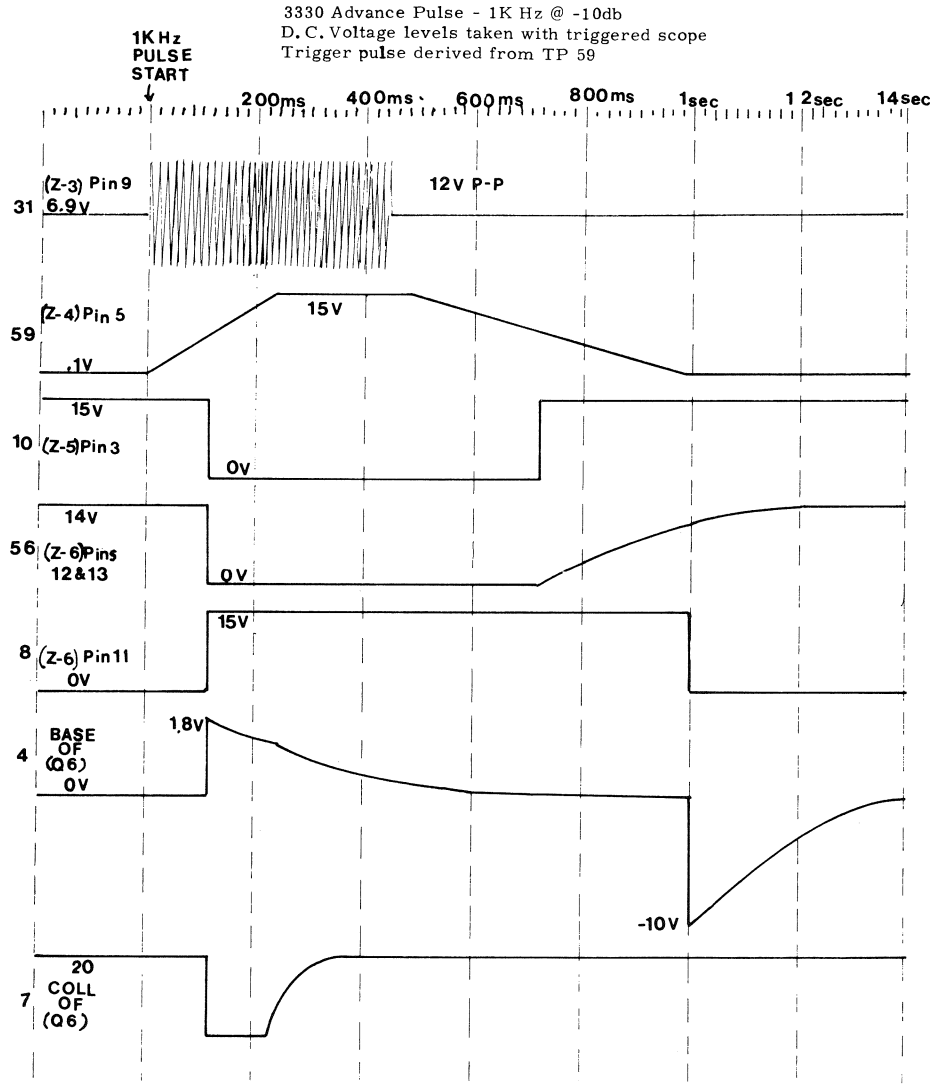

Figure 4-20 3330 ADVANCE PULSE WAVEFORMS

2. STOP PULSE DETECTION CIRCUIT

The Stop Pulse Detection Circuit consists of the 150Hz filter (Z-4B) and (Z-4C) and the Stop Ramp Detector (Z-4D) (Figure 4-21). This circuit is identical to the 1000Hz filter circuit (Z-3C) and (Z-3D).

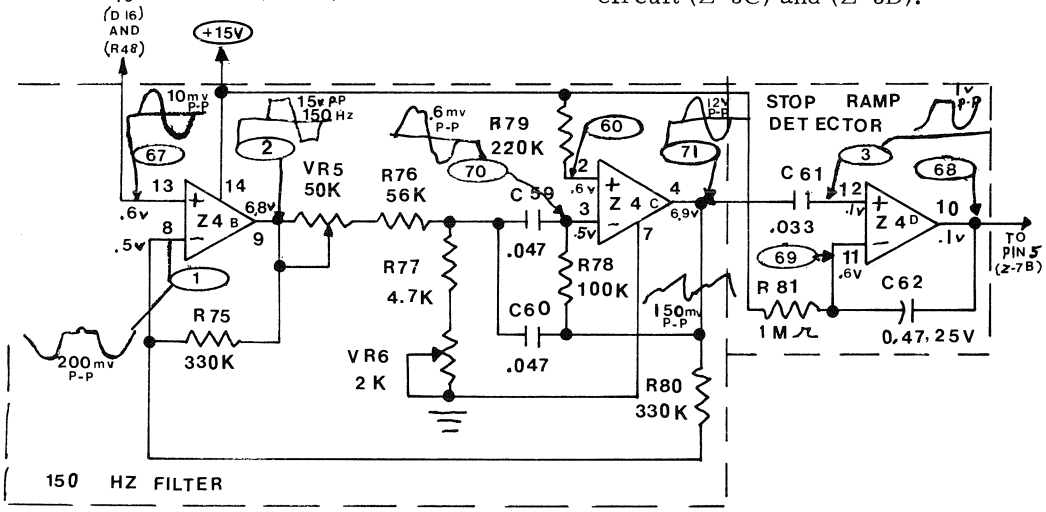

Figure 4-21 150Hz FILTER AND RAMP DETECTOR

and the advance ramp detector (Z-4A) except it is tuned to 150 Hz rather than 1000 Hz. (See Section IV, Para A.3 and Para B.1 and Figure 4-9). The output of this circuit is a gradually increasing positive voltage which will eventually turn on NOR GATE (Z-7B) (Described under Tape Drive Control Logic circuits).

The 150 Hz Stop Pulses Recorded on Channels 3 and 4 of the magnetic tape are picked up by the second channel of the tape head (H-1, Ch. 2) along with the 1000 Hz advance pulses and are fed into the Cue preamplifier (Z-3A) and (Z-3B) (Figure 4-8). The output of the Cue Preamplifier is fed through (R-45) and (C-45) to the 1000 Hz filter where the advance pulses are detected, and also through (C-46) and (R-48) to Pin 13 of (Z-4B) where the Stop pulses are detected. When a stop pulse is present on the tape, the 150 Hz filter recognizes it and produces an output at Pin 4 of (Z-4C) which causes (Z-4D) to produce its positive going output and subsequently turn on NOR GATE (Z-7B) (See Figure 4-22 for waveforms).

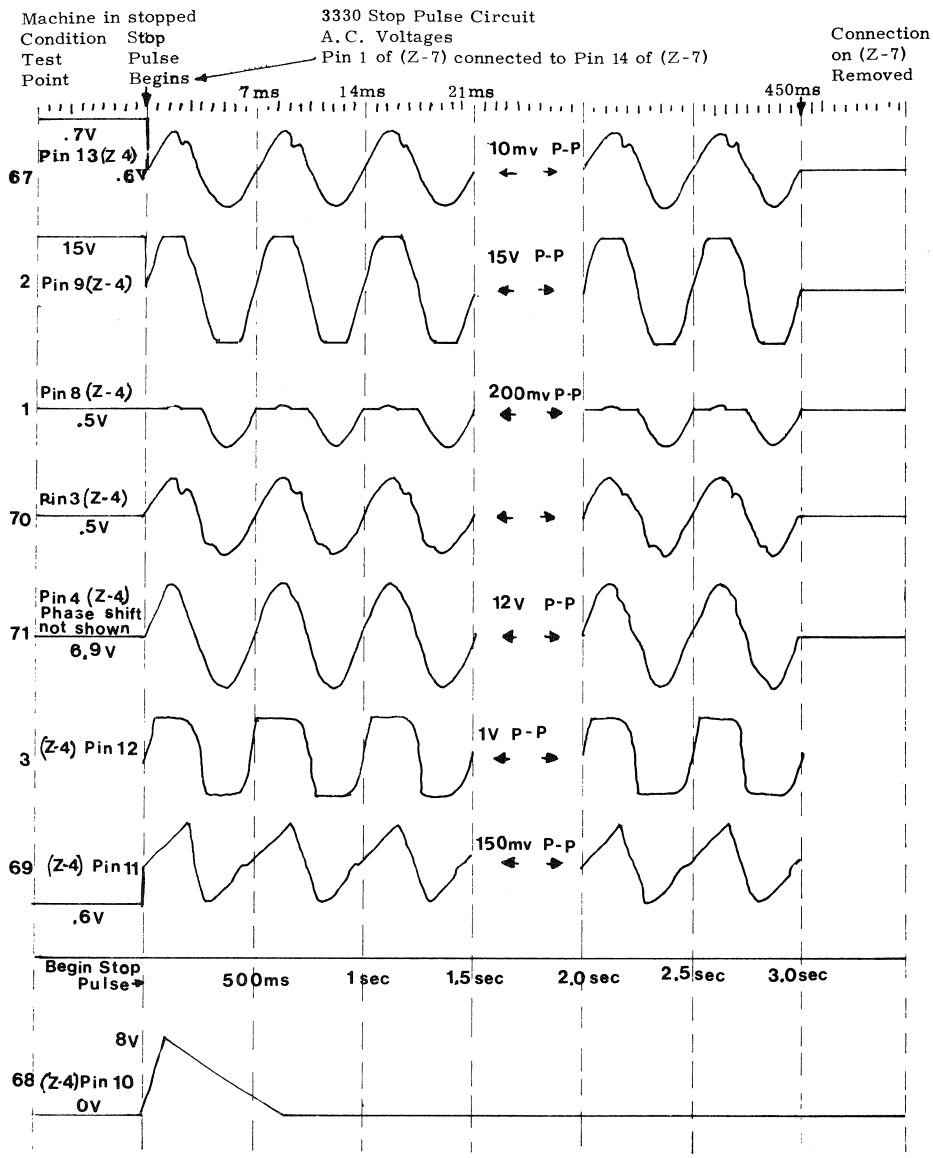

Figure 4-22. 3330 Stop Pulse Circuit Waveforms

3. TAPE DRIVE CONTROL LOGIC CIRCUIT

The Tape Drive Control Logic Circuit is used in conjunction with the Stop Pulse Detecting Circuit and the Tape Pause Restart Button to stop and start the tape drive motor (M-2)(Figure 4-23).

The heart of this circuit is the Bistable Multivibrator or "Flip-Flop" circuit (Z-7A) and (Z-7B). When power is initially applied to the projector this multivibrator must be conditioned to allow the tape drive motor (M-2) to run. This is accomplished by applying a positive pulse developed across (R-65) by (C-54) charging through it, to

Pin 9 of NOR GATE (Z-7A). This logic high produces a logic low at the output of (Z-7A), Pin 13, which is coupled back to Pin 2 of (Z-7B). Together with the lows already on Pins 3, 4 and 5 of (Z-7B) this low holds NOR GATE (Z-7B) cut off and guarantees a logic high at its output, Pin 1. The base of (Q-8) and Pin 12 of (Z-7A) are now held at a high and both conduct allowing the tape deck motor to run and maintaining a low at the output of (Z-7A), Pin 13, respectively.

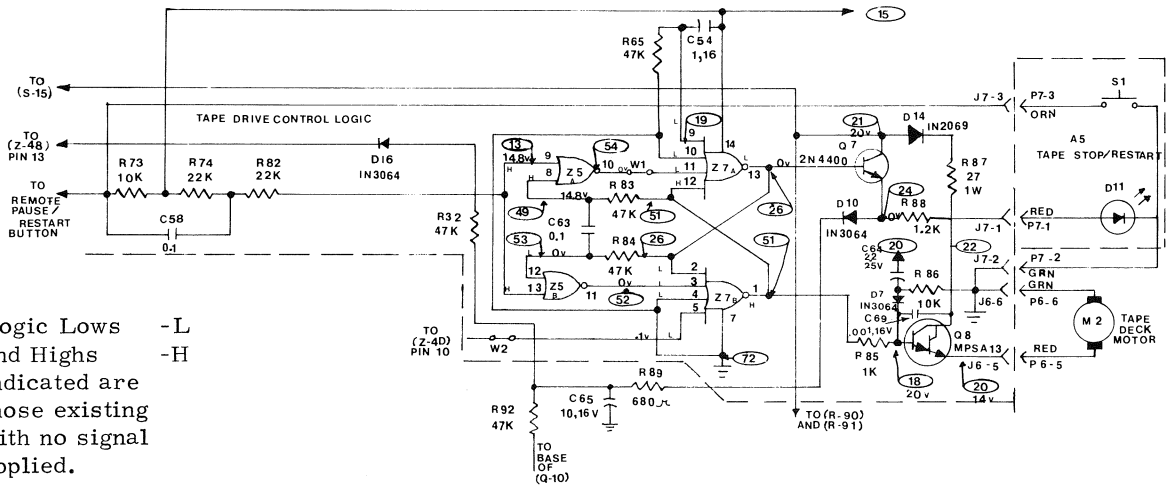

Figure 4-23. Tape Drive Control Logic

Now when a 150 Hz Stop Pulse is introduced into the projector, the Stop Ramp Detector (Z-4D) produces its positive output at Pin 10, which turns (Z-7B) on and produces a logic low at its output, Pin 1. This low cuts off both (Q-8) and (Z-7A). The tape deck motor now stops running and the output of (Z-7A) goes high. Coupling this high back to Pin 2 of (Z-7B) keeps this NOR GATE conducting and holds its output low to keep (Q-8) cut off and the tape deck motor stopped. (Figure 4-24).

The high on Pin 13 of (Z-7A) is also connected to the base of (Q-7) causing it to conduct through the red light emitting Diode (D-11) located on the front panel next to the "Tape Pause/Restart Button". The diode now lights to indicate that the tape deck motor has been stopped.

Due to its conduction, a positive voltage appears at the emitter of (Q-7) which performs two very important functions. First, it is connected through (D-10), (R-89) and (R-92) to the base of (Q-10) to keep (Q-10) conducting. Second it is connected through (D-10), (R-89), (R-32) and (D-16) to Pin 13 of (Z-4B) to force it into saturation. With the tape deck motor stopped, it is necessary to keep (Q-10) conducting to prevent the Auto-Stop Solenoid from releasing the tape transport mechanism. When the tape transport is restarted by depressing the "Tape Pause/Restart Button" and (Q-7) stops conducting (C-65) holds the base of (Q-10) positive momentarily until the tape transport comes up to speed and the tape deck spindle switch supplies the proper signal to keep (Q-10) conducting (Figure 4-24).
(See Auto-Stop Detector and Tape Drive description, (Section IV, Para A-5).

The purpose of forcing (Z-4B) into saturation is to prevent it from immediately responding to 150 Hz Stop Pulses when the tape transport mechanism is restarted. When the tape transport is restarted, (C-65) holds (Z-4B) saturated momentarily until the tape transport comes up to speed. This insures that, in the event an unusually long stop pulse had been recorded on the tape, the tape transport will not immediately stop as soon as it's restarted due to the remainder of this long pulse passing the tape head after restarting.

Restarting the tape transport after it has been stopped by a Stop Pulse is accomplished by depressing either the "Tape Pause/Restart" button located on the front control panel of the projector or the "Pause/Restart" button on the hand held Remote Control. This action puts a ground at the juction of (C-58) and (R-73) and couples a negative pulse, due to the charging action of (C-58), through (R-82) to Pin 9 of (Z-5A) and Pin 13 of (Z-5B) (Figure 24. (Z-5B) is not affected by this pulse since a high remains on Pin 12. However, (Z-5A) is turned off since Pin 8 is also low, and a positive pulse is transmitted from its output, Pin 10, to Pin 11 of (Z-7A). The output of (Z-7A), Pin 13, now goes low, turning off (Q-7) and (Z-7B). L.E.D. (D-11) goes out and the output of (Z-7B), Pin 1, goes high, holds (Z-7A) on and turns (Q-8) on to allow the tape deck motor to run. Depressing either Pause-Restart button again will momentarily turn (Z-5B) off and Reverse the condition of (Z-7A) and (Z-7B) to stop the tape deck motor and light (D-11) again. (See Figure 26 for Waveforms).
NOTE: See (Figures 4-27 and 4-28) for Manual Advance and Reverse Waveforms.

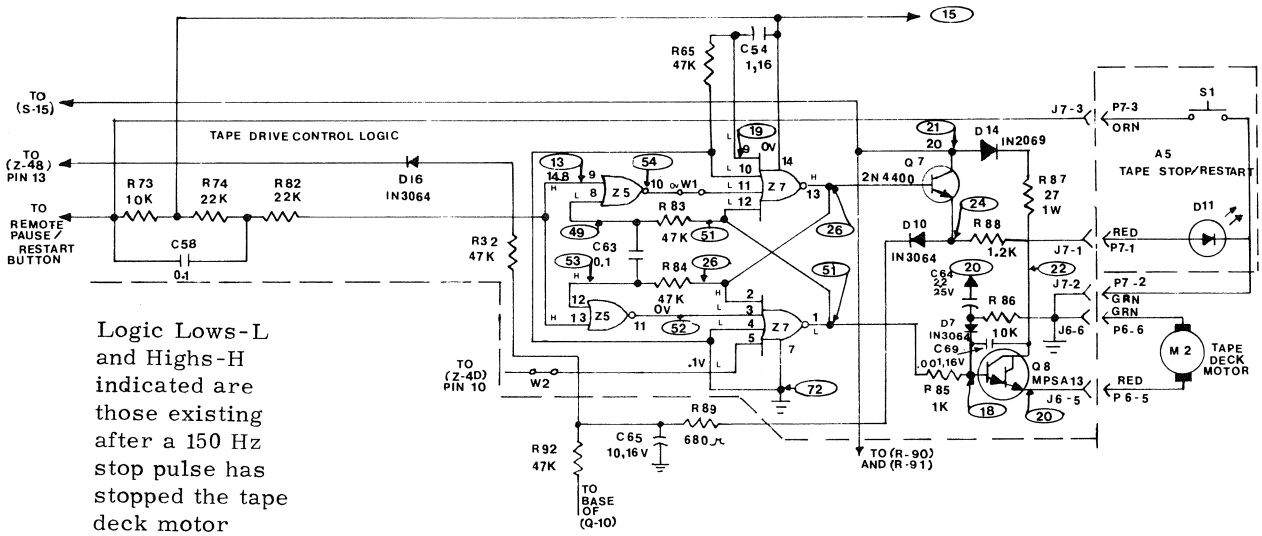

Figure 4-24 TAPE DRIVE CONTROL LOGIC

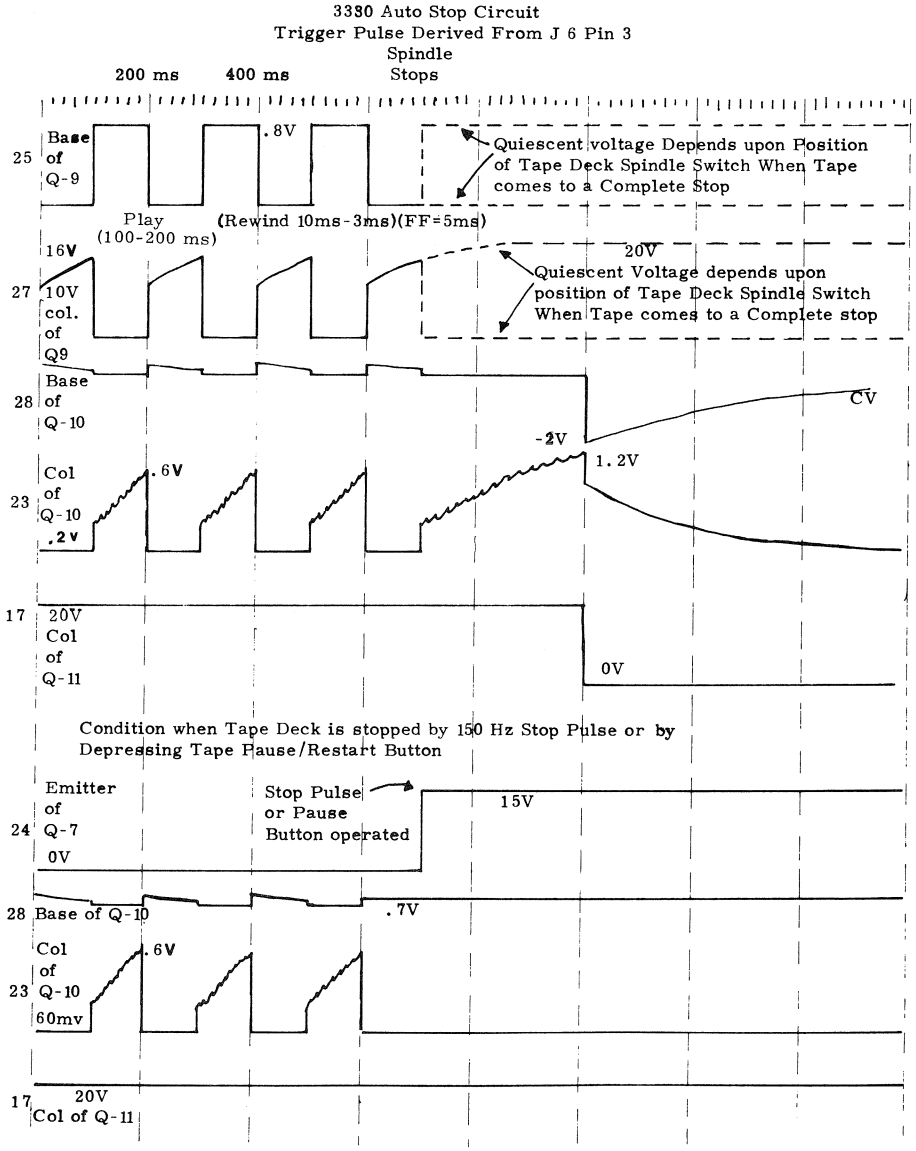

Rev B 8/80

Figure 4-25 3330 AUTO STOP CIRCUIT WAVEFORMS

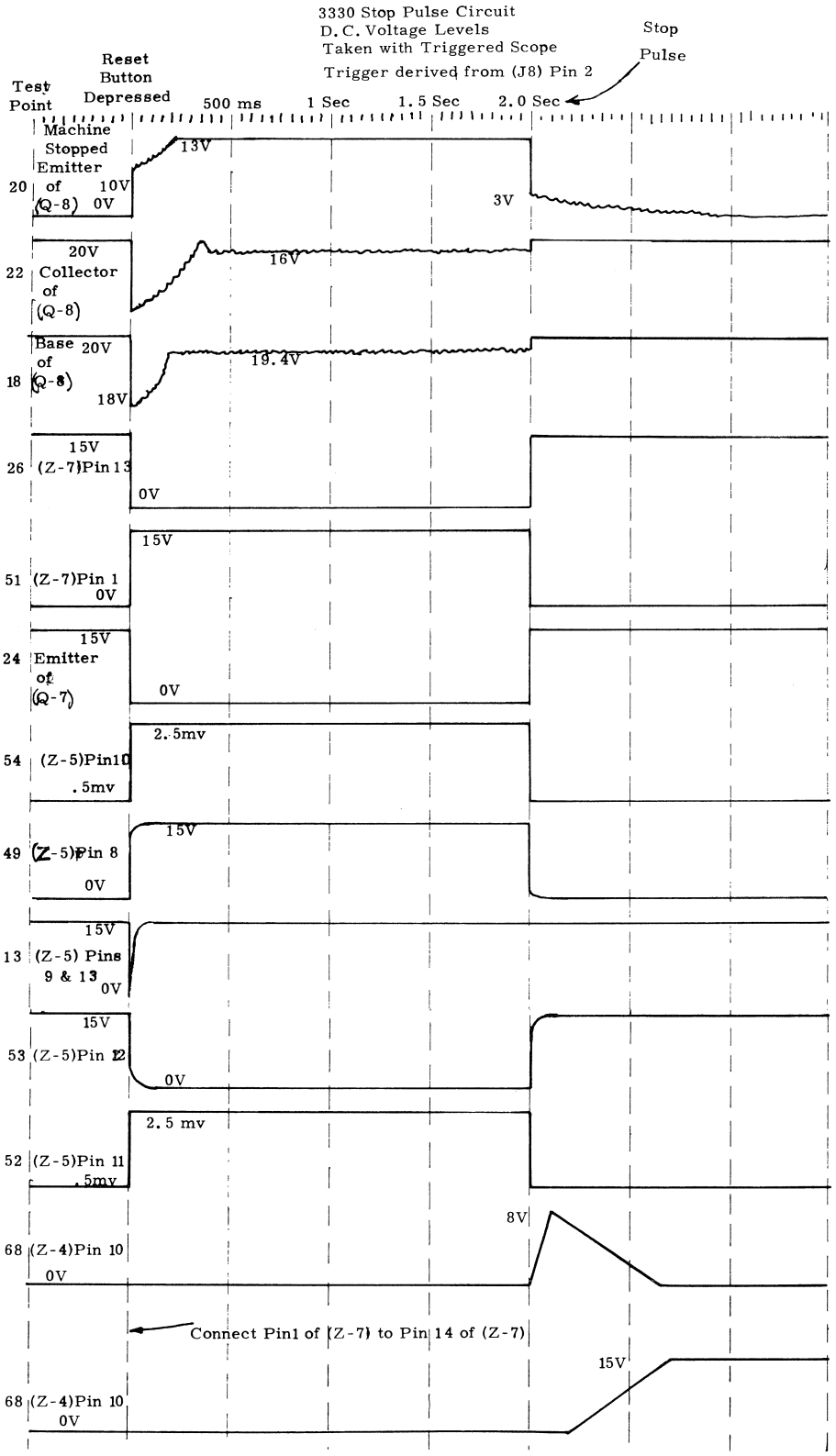

Figure 4-26 3330 STOP PULSE CIRCUIT WAVEFORMS

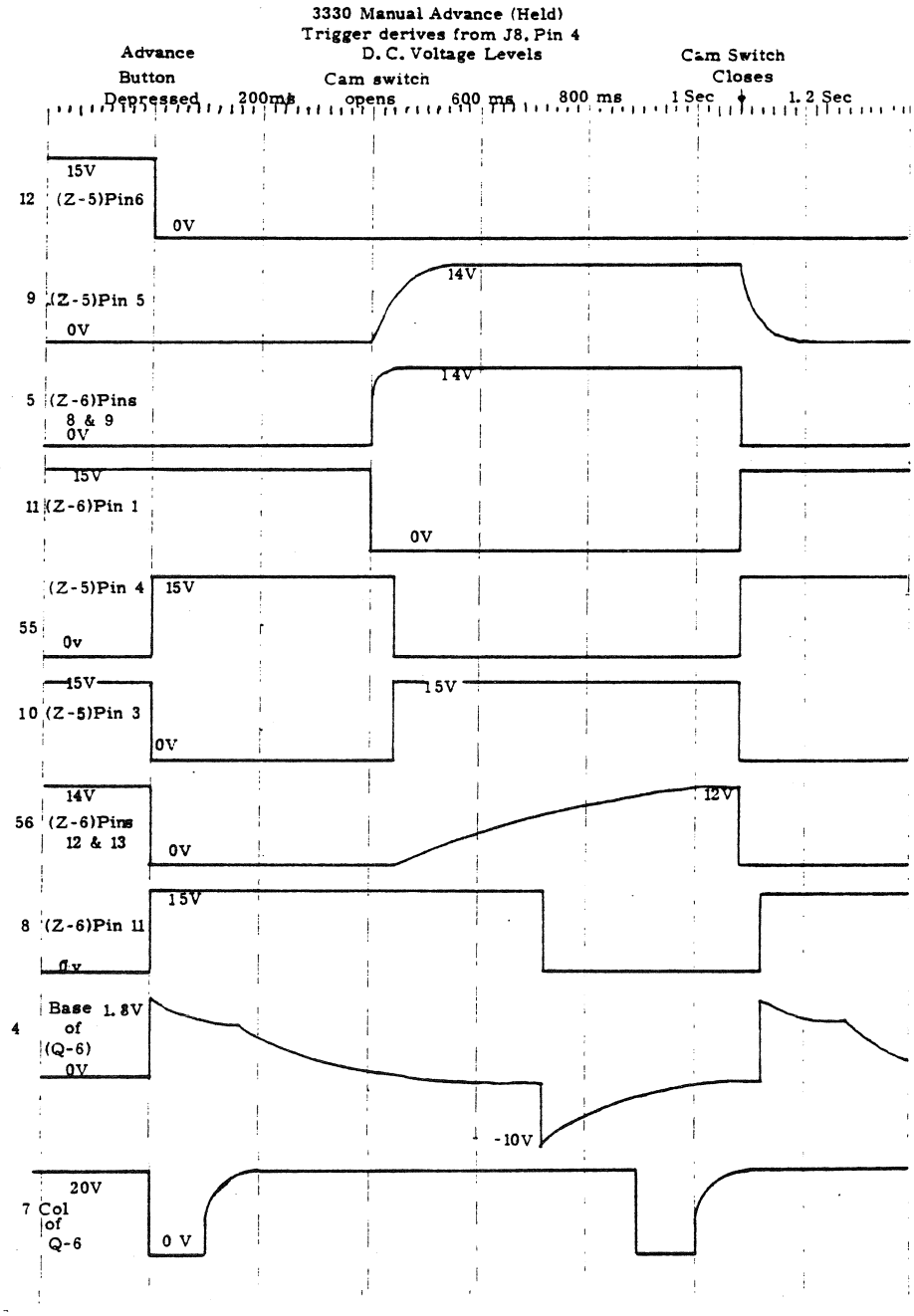

Figure 4-27 3330 MANUAL ADVANCE WAVEFORMS

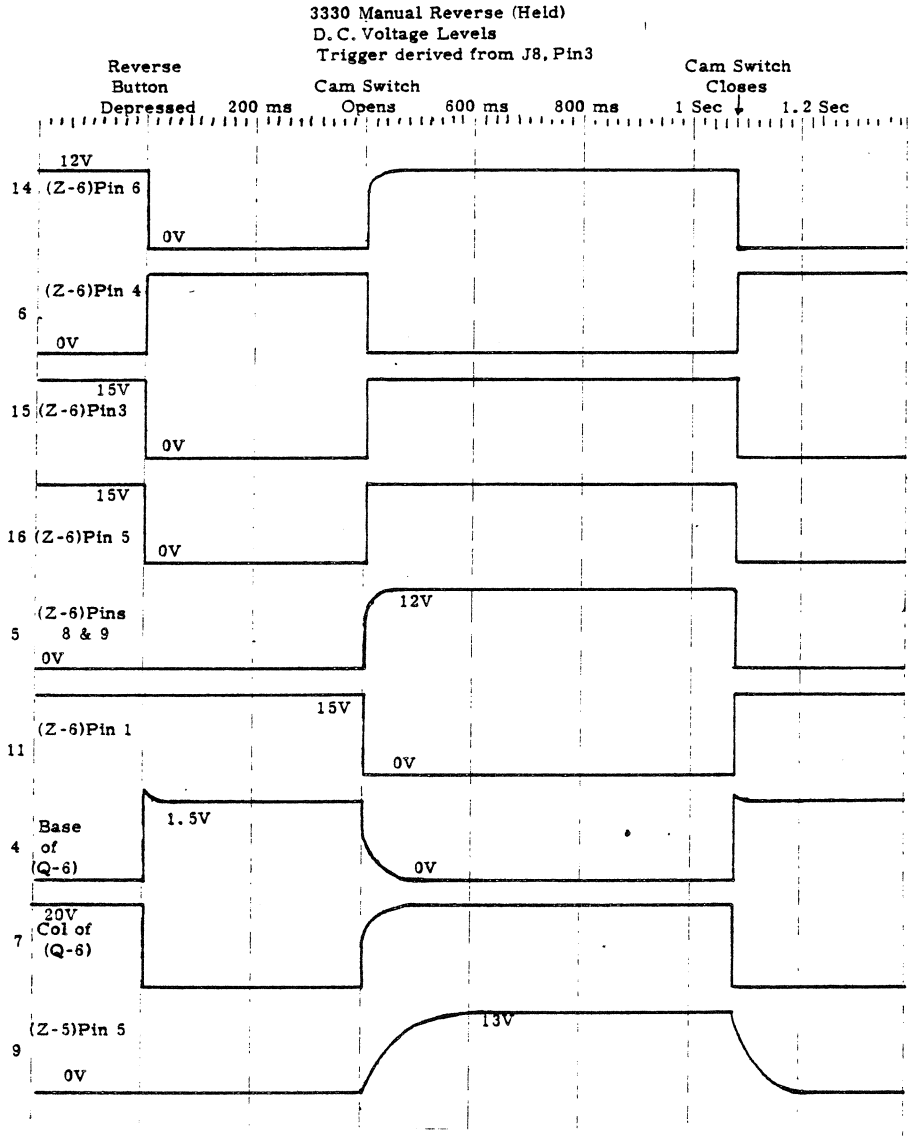

Figure 4-28. 3330 MANUAL REVERSE WAVEFORMS

C. 3350 RECORD/PLAY - WITH STOP PULSE

Circuitry in the Caramate 3350 Models is basically the same as that found in the 3320 and 3330 Models. Most of the circuitry has already been described. In this section, only circuit variations or circuits which are entirely different will be discussed.

1. POWER SUPPLY

The DC power supply in the 3350 Models Figure 4-29) is the same as that used in the 3320 and 3330 Models with the exception that it produces two unregulated voltages of +20 volts and +14 volts, and one +15 volt regulated voltage. (See 3320 PLAY ONLY-NO STOP PULSE - DC POWER SUPPLY, Figure 4-4)

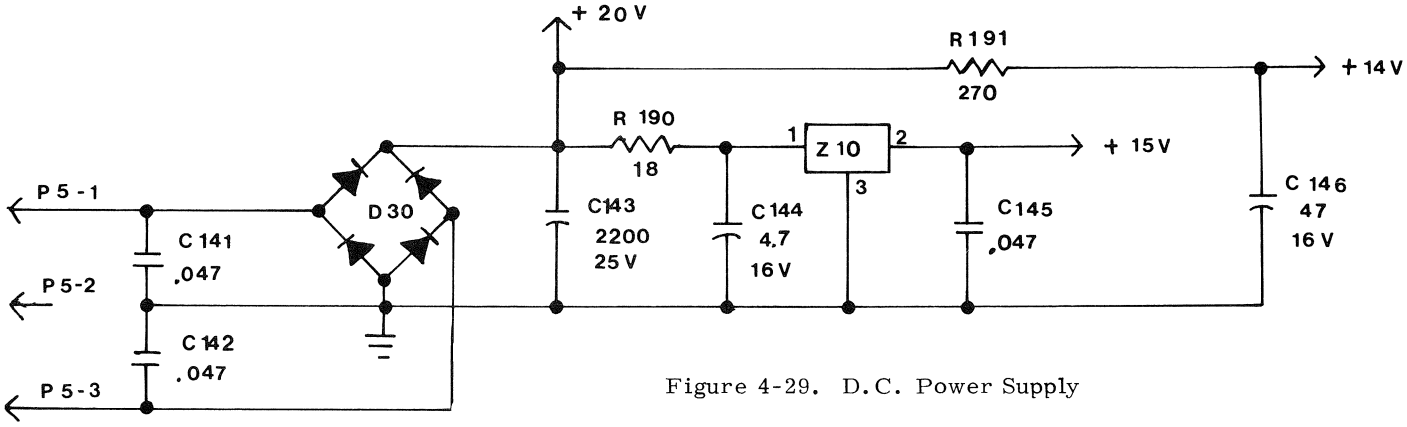

Figure 4-29. D.C. Power Supply

2. AUDIO CIRCUITS

Unlike the Audio Amplifier in the 3320 and 3330 Models, which uses discreet (Individual) components, the Audio Amplifier in the 3350 Models employs an Integrated Circuit Chip as a Preamplifier (Z-1A) and Equalizing Amplifier (Z-1C) (Figures 4-30 and 4-31). Voltage Regulator (Z-1B) provides a regulated +10 volt supply for these two stages of amplification to improve the signal-to-noise ratio when they are used in the record mode.

PLAYBACK MODE

The output from Pin 13 of (Z-1C) is fed into the high pass filter circuit (Q-2) and (Q-3), which is identical to the high pass filter used in the 3320 and 3330 Models. From the high pass filter the signal is then fed through the Volume/Tone control network to the output amplifier which is basically the same as the output amplifier used in the 3320 and 3330 Models. (Figure 4-32). See Audio Circuits, Section IV, Para A-2, 3320.

RECORD MODE

(Record and Play buttons depressed and the Microphone plugged in). All contacts of the Record switch (S-1) and the Microphone switch (S-2) transfer from the Play (P) position to the Record (R) position. (Audio recording cannot be accomplished unless both (S-1) and (S-2) are operated.) Contacts (S-1B) and (S-2D) switch the input of (Z-1A) from the Play/Record head (H-1) to the Microphone jack (J-16) (Figure 4-30). Contacts (S-1F) and (S-2F) change the equalization of the Equalization Amplifier (Z-1C) from Playback to Record Equalization and also feed the output of (Z-1C) to the Record Signal Detector (Q-1) and the Play/Record Head through (C-25), (R-60) and Switch contacts (S-1D) and (S-2E) (Figures 4-30, 4-31; and full schematics.

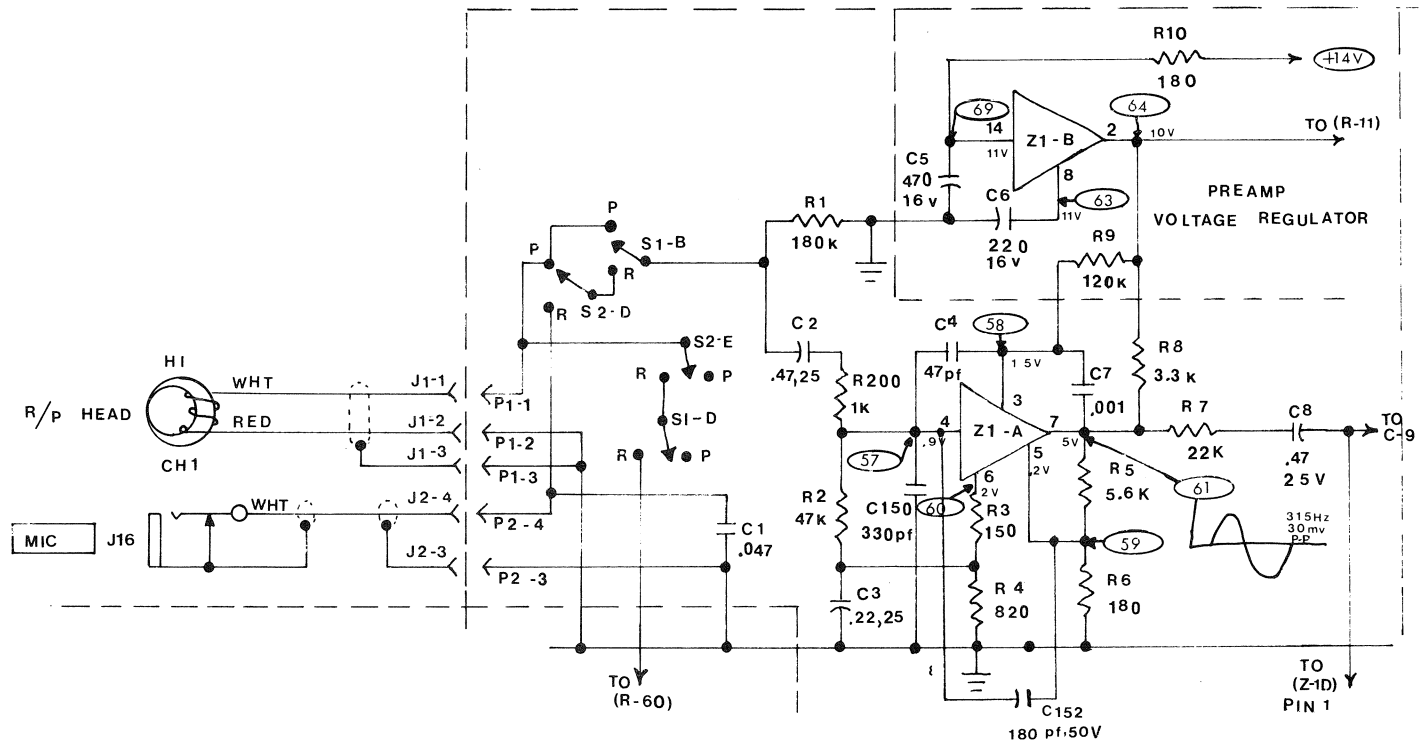

Figure 4-30. Audio Preamplifier and Voltage Regulator

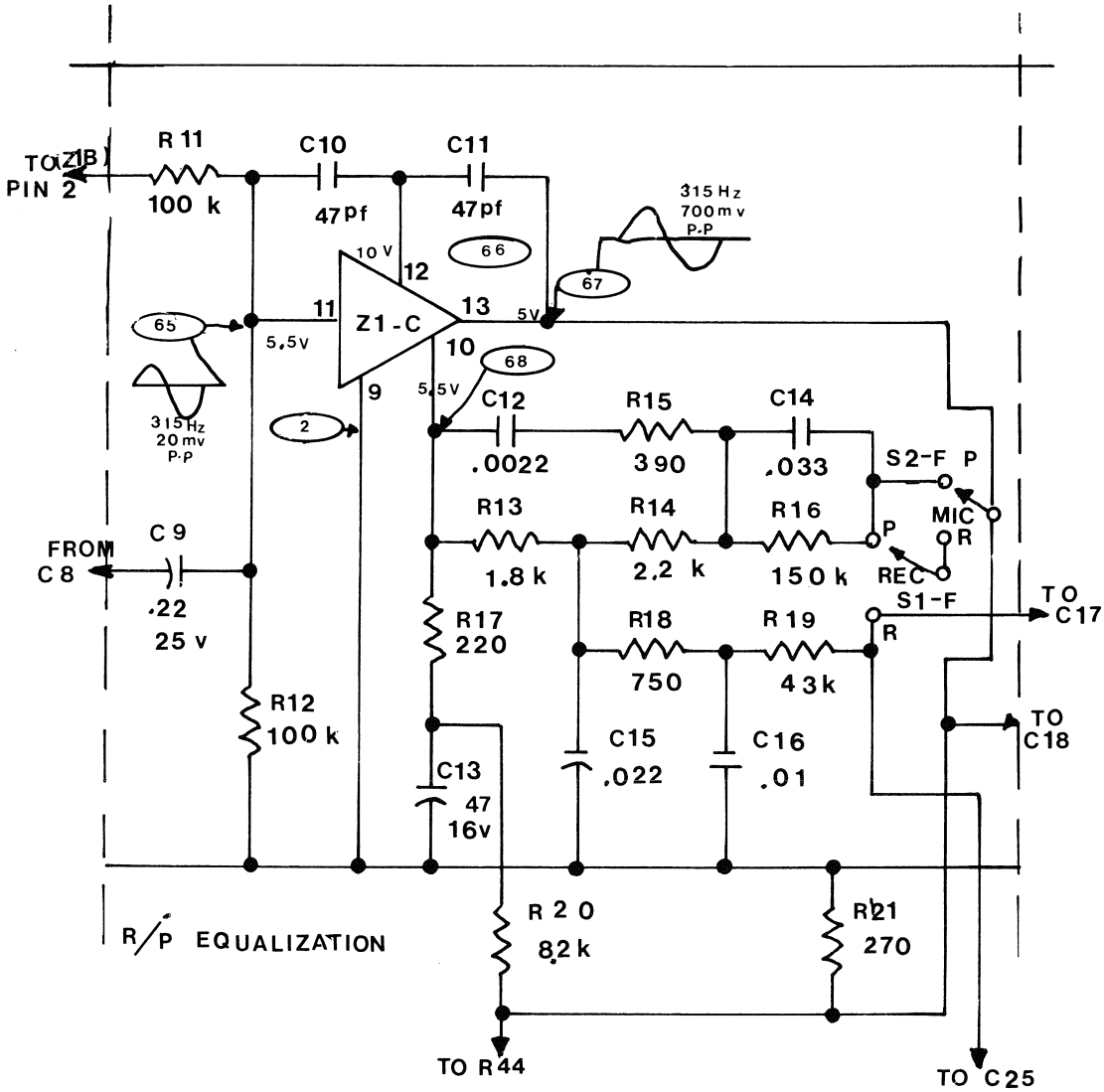

Figure 4-31. R/P Equalization Amplifier

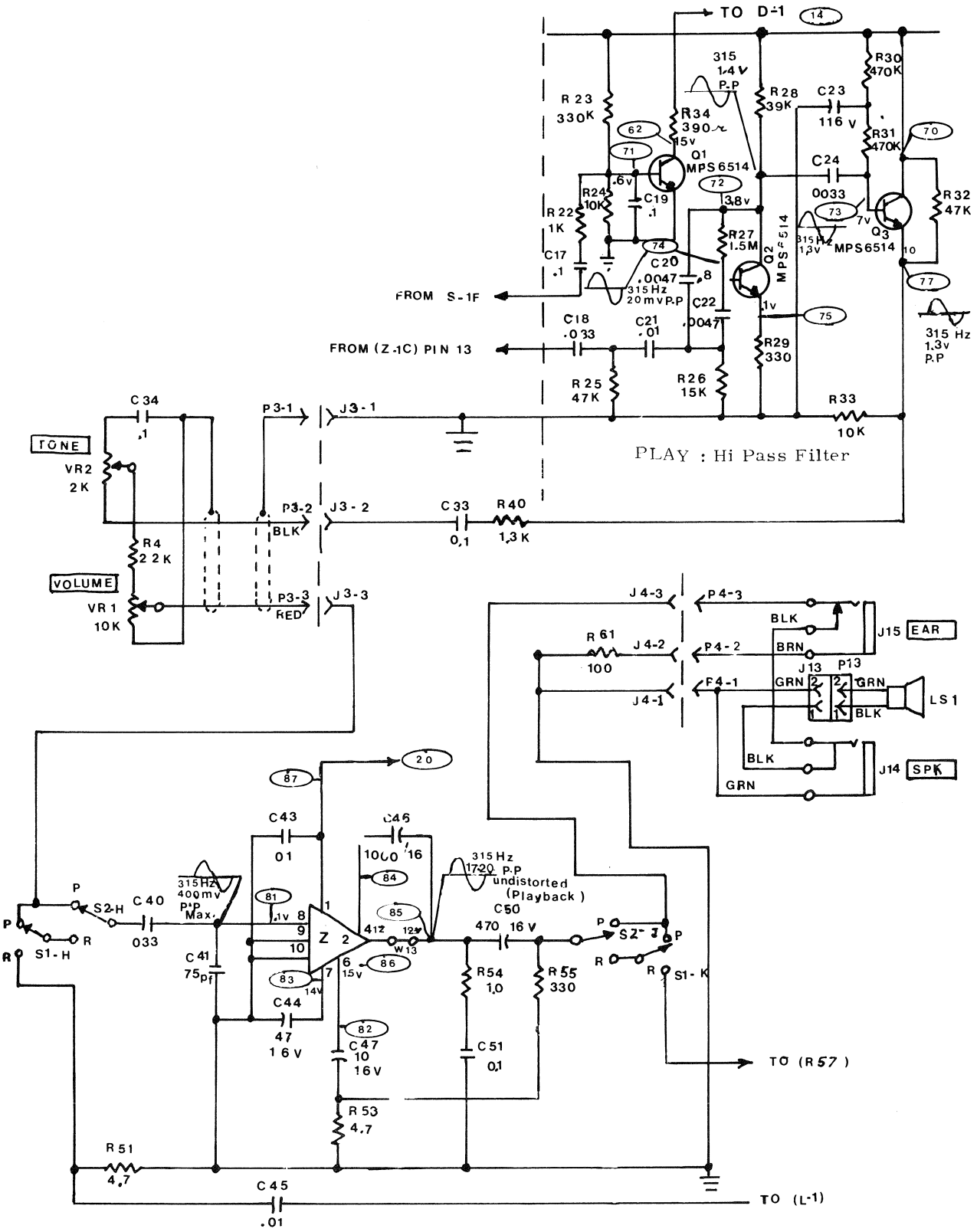

Figure 4-32. AUDIO HIGH PASS FILTER, VOLUME/TONE CONTROL AND OUTPUT AMPLIFIER.

The Record Signal Detector (Q-1) produces a variation in light intensity in the Red, Audio Record L.E.D. (D.1) which corresponds to the changes in amplitude of the input signal introduced into the amplifier through the microphone jack (J-16) (Figure 33).

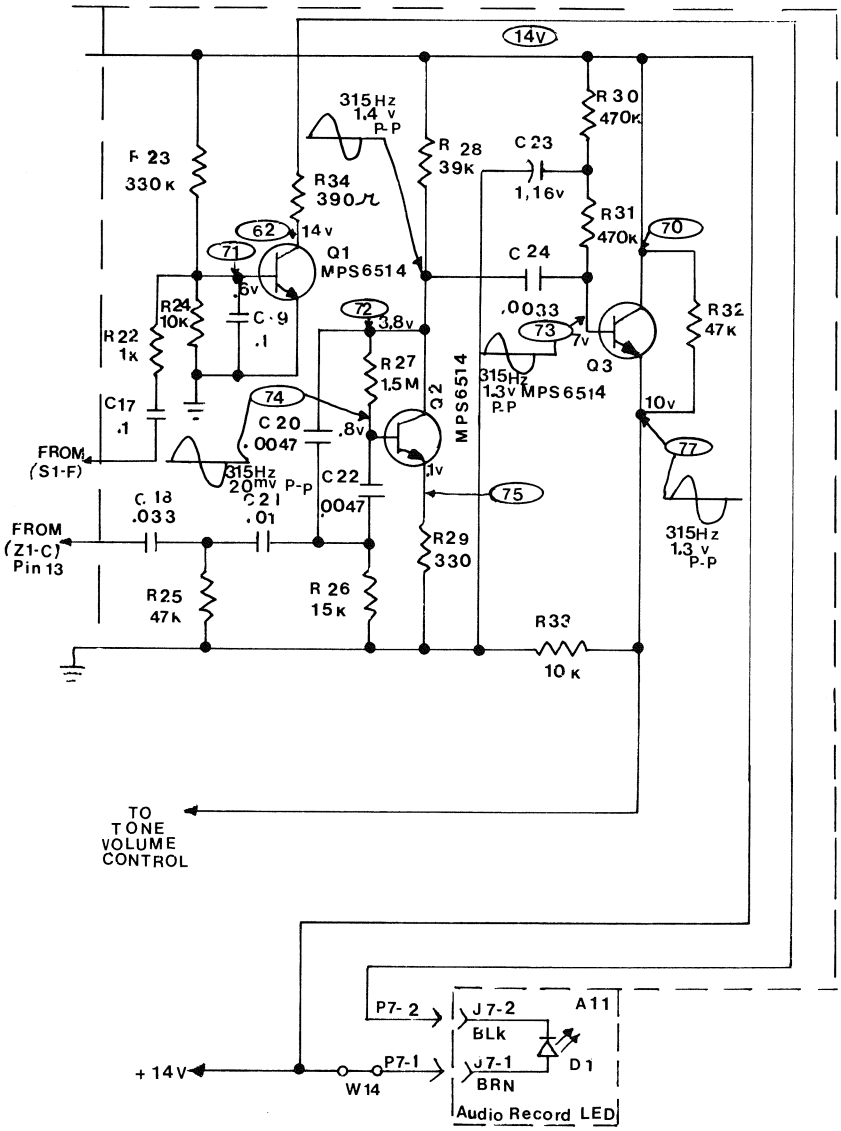

Figure 4-33. Record Signal Detector

Switch contacts (S-1A) and (S2-B) condition the Automatic Level Control Amplifier (Z-1D) to regulate the output signal level of (Z-1C) thus preventing any possible overdriving of the tape head (H-1) in the event an unusually high level signal is applied to the amplifier at the microphone jack (J-16) (Figure 4-34).

Switch contacts (S-1H), (S-2H) and (S-1K), (S-2J) condition the output amplifier (Z-2) so it functions as a bias oscillator in the record mode. The output of approximately 57K Hz is coupled to the Play/Record Head (H-1) through the bias level adjusting potentiometer (VR-3, capacitor (C-53) and switch contacts (S-1D) and (S2E). Bias frequency and level are not critical and adjustments will be covered in the Electronic Adjustments and Specifications section. (Figure 4-35).

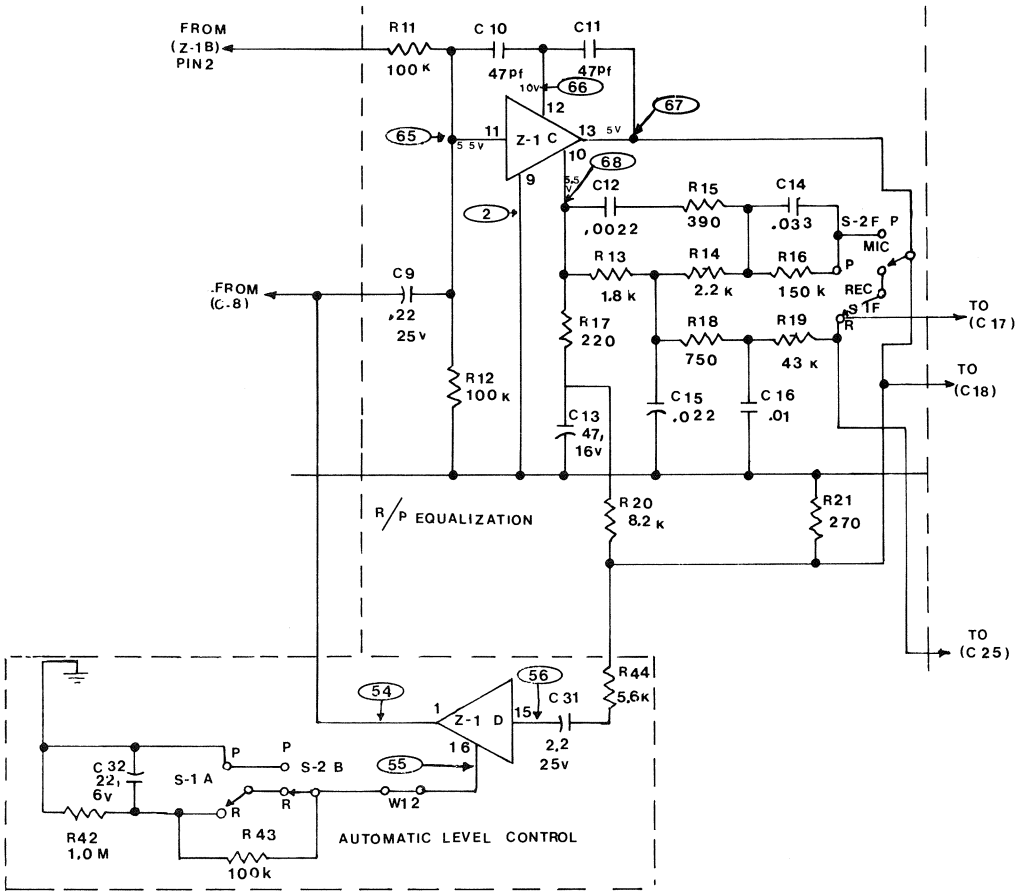

Figure 4-34. AUTOMATIC LEVEL CONTROL

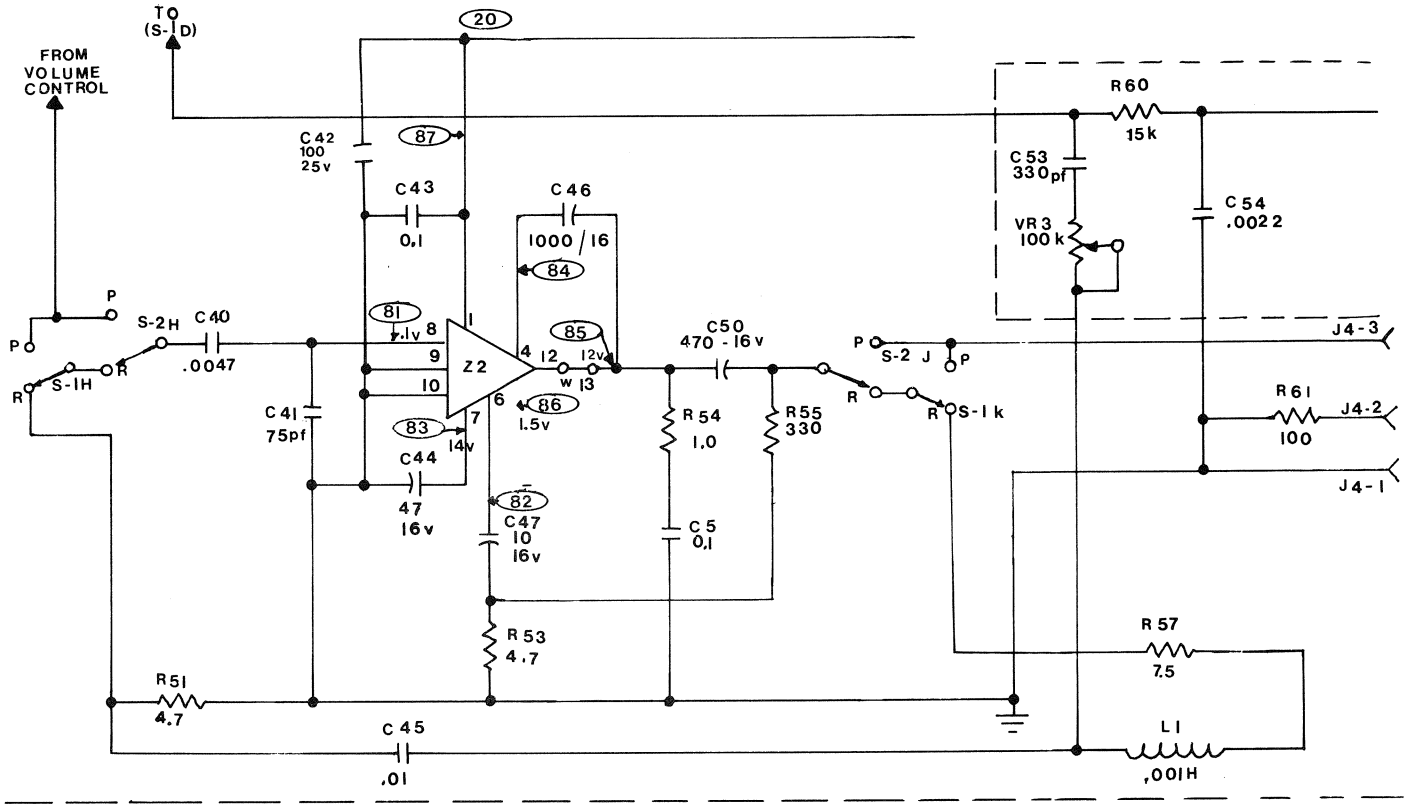

Figure 4-35. BIAS OSCILLATOR

3. TRAY CONTROL LOGIC CIRCUITS

The basic tray control logic circuits in the 3350 Models function the same as those in the 3330 Models (See Tray Control Logic Circuits, Section IV, Para. A.4., 3330). However, since the 3350 Models also must be able to record advance pulses, a timing circuit (Z-8B) and an additional NAND GATE (Z-9B) have been added. Also (Z-6A) has been wired in conjunction with (Z-9A) to form a bistable Multivibrator or Flip-flop Circuit (Figure 4-36).

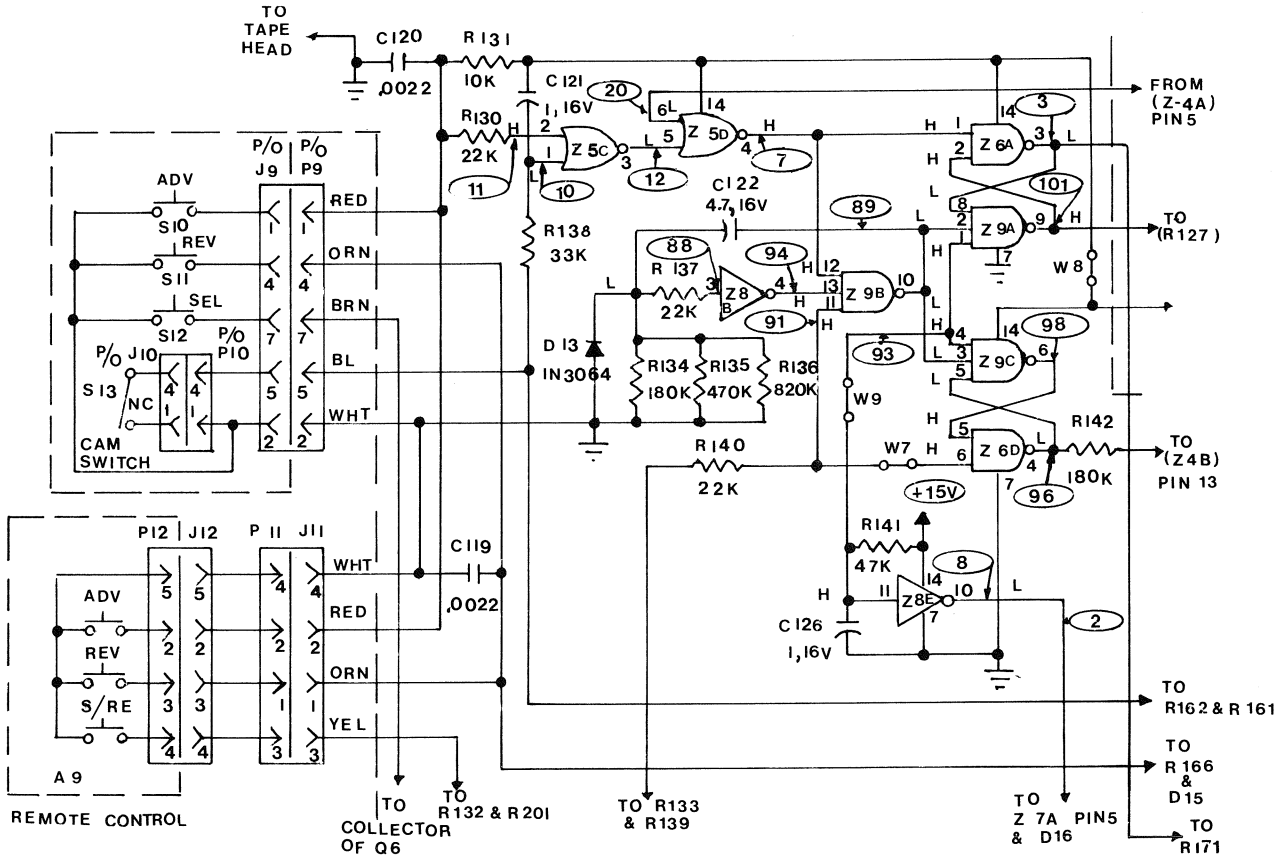

Logic Lows (L) and Highs (H) indicated are those existing with no signal applied.

Figure 4-36. Tray Logic Control

PLAYBACK MODE

The 1000 Hz Advance Pulses are processed the same as in the 3320 and 3330 Models. (See Advance Cue Detection Circuits, Section IV, Para. A.3. 3320). The positive output (Logic High) of the advance ramp Detector (Z-4A) produces a logic low at the output of (Z-5D). This low continues for about 600 ms and is applied to Pin 1 of (Z-6A) and Pin 12 of (Z-9B). As a result, both stop conducting for about 600 ms and produce logic highs at their outputs for this duration (Figure 4-37). These two highs are coupled to Pins 8 and 2 respectively of (Z-9A) and together with the logic high already on Pin 1 of (Z-9A) cause it to conduct and produce a low at its output, Pin 9. Coupled back to Pin 2 of (Z-6A), this low guarantees that (Z-6A) will remain cut off for 600 ms.

The 600 ms high at the output of (Z-6A) is also coupled through (R-171) and (C-131) to the base of (Q-6) to advance one slide (See Tray Control Logic Circuits, Section IV, Para. A.4. 3320).

When the 450 ms, 1000 Hz Cue Pulse ends and the positive voltage output from (Z-4A) drops off (Figure 4-37), a logic high reappears at the output of (Z-5D). This high cannot start (Z-6A) conducting since the logic low output from (Z-9A) is holding if cut off. However, the high does allow (Z-9B) to conduct and its output goes low. This cuts off (Z-9A) and its output goes high and now allows (Z-6A) to conduct. The output of (Z-6A) goes low and the entire circuit is now ready to respond to the next cue pulse.

During the above sequence, the logic high which had appeared at the output of (Z-9B) started the timer (Z-8B) through its cycle. However, the timer cycle is about 500 ms so it completes its cycle before the logic high reappears at the output of (Z-5D) and so has no affect in the circuit when the circuit is triggered by a 1000 Hz cue pulse.

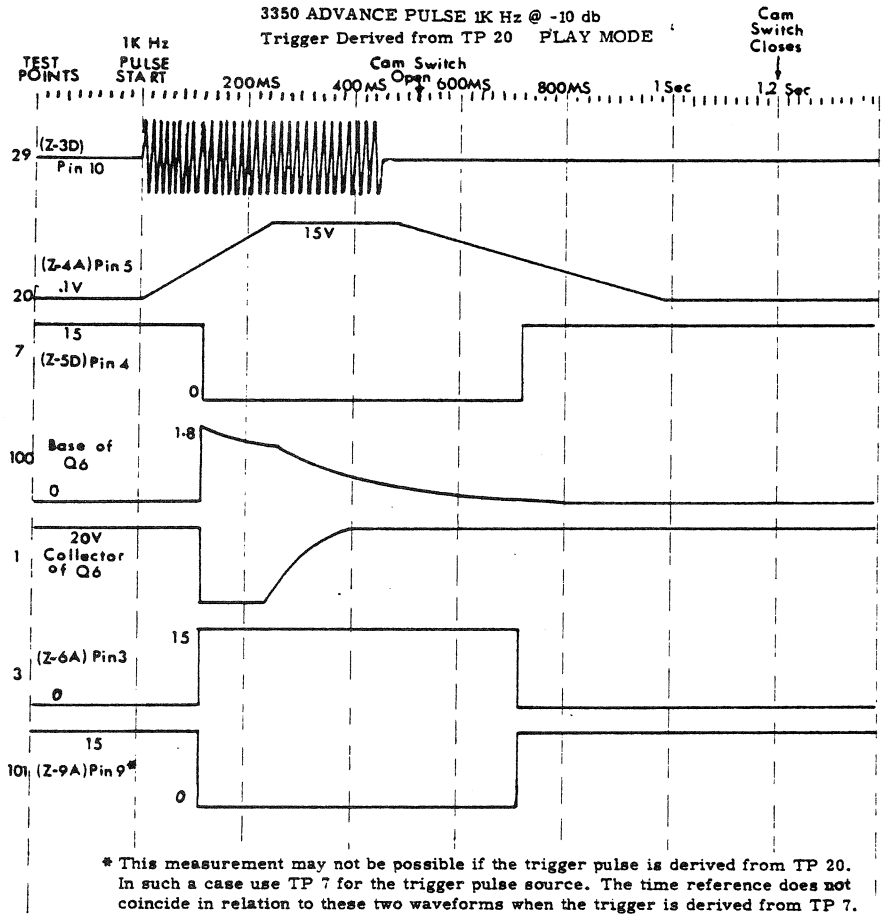

* This measurement may not be possible if the trigger pulse is derived from TP 20. In such a case use TP 7 for the trigger pulse source. The time reference does not coincide in relation to these two waveforms when the trigger is derived from TP 7.

Figure 4-37. 3350 Advance Pulse Waveforms

MANUAL ADVANCE

When advancing slides in the 3350 Models by depressing the Advance button (S-10) the timer circuit (Z-8B) does become a determining factor in the operation of the Tray Control Logic Circuit. This is because a means must exist to time advance pulses in the record mode when the advance button is depressed. Depressing the advance button (S-10) starts the same sequence of events in NOR GATES (Z-5C) and (Z-5D) as described under MANUAL ADVANCE, Section IV, Para. 4.A. 3320, with the end result that one slide advances. However, due to the 500 ms cycle time of the timer (Z-8B) and the addition of NAND GATES (Z-9B) and (Z-9A), neither the release of the advance buttons (S-10) nor the opening of the cam switch (S-13) will reset the circuit as in the 3320 and 3330 Models (Figure 4-36).

The logic low which appears at the output of (Z-5D) cuts off (Z-6A) and (Z-9B) and causes (Z-9A) to conduct and hold (Z-6A) cut off. The logic high at the output of (Z-6A) turns (Q-6) on and one slide advances.

The logic high now at the output of (Z-9B) starts the timer (Z-8B) through its cycle. A logic high appears at Pin 3 of the timer due to the coupling action of (C-122), and since (Z-8B) is an inverter, a logic low appears at its output, Pin 4. This low is coupled directly to Pin 13 of (Z-9B) and holds it cut off until (C-122) charges through (R-134), (R-135) and (R-136). The correct combination of these resistors is chosen to produce a timer cycle of about 500 ms.

When (C-122) becomes charged, the logic high on Pin 3 of (Z-8B) disappears and Pin 3 reverts to ground potential. A logic high thus appears at Pin 4 and is coupled to Pin 13 of (Z-9B). Since a high exists on Pin 11 of (Z-9B) and Pin 12 has gone high by now, either by the release of the advance button (S-10) or by the opening of the cam switch (S-13), (Z-9B) conducts and puts out a logic low which cuts off (Z-9A). The output of (Z-9A) now goes high and allows (Z-6A) to conduct. Its output goes low and the circuit is now ready to respond to the next advance signal (Manual or Cue Pulse) (Figure 4-38).

The important thing to remember is that this entire cycle has taken place in approximately 500 ms. In other words, a logic high appears at the output of (Z-6A) for about 500 ms and a logic low appears at the output of (Z-9A) for about 500 ms, all as a result of the action of the timer (Z-8B).

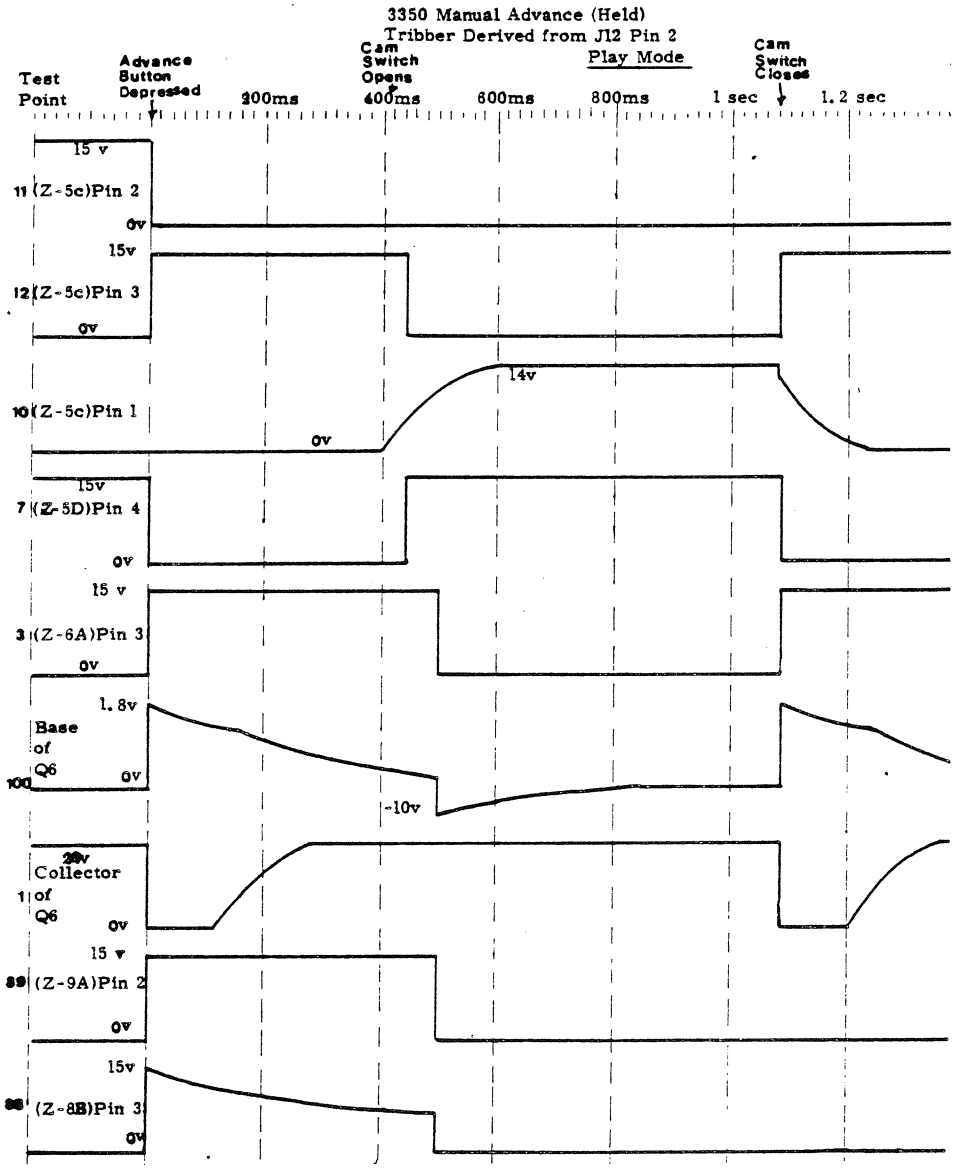

Figure 4-38. Manual Advance Waveforms

RECORD MODE

(Record and Play Buttons depressed). The tray control logic circuit functions identically in the record mode as in the playback mode. However, it is used to determine the length of the 1000 Hz advance pulses to be recorded on the tape. Depressing the Manual Advance button (S-10) produces a 500 ms logic low at the output of (Z-9A) as described above. This 500 ms low is what initiates the action to produce the 500 ms advance pulse.

The 1000 Hz Advance Cue Pulses are generated in the 1000 Hz filter-oscillator (Z-3C) and (Z-3D). This circuit is conditioned to be an oscillator by (S-1E) section of the record switch when the record button is depressed and the contact moves from the (P) position to the (R) position. (Figure 4-39).

Record switch section (S1J) also moves from the (P) position to the (R) position. This removes the +15 supply voltage from the input of (Z-8A) (Coupled there through D-9) and transfers the control of the input of (Z-8A) to the output of (Z-9A).

Now when the 500 ms low appears at the output of (Z-9A), it is coupled through (R-127) to Pin 9 of inverter (Z-8A) producing a logic high at its output, which is in turn coupled to Pin 13 of (Z-3C). This causes the 1000 Hz filter-oscillator to oscillate at 1000 Hz for 500 ms. Its output is coupled through (R-118) to the base of the emitter-follower (Q-5). The output of (Q-5) is coupled through (C-103), (R-103) and (S-1C)(R) contact to the cue channel Record/Play Head (H-1)(CH-2). The result is the recording of one 500 ms, 1000 Hz cue pulse on the tape each time the advance button (S-10) is depressed.

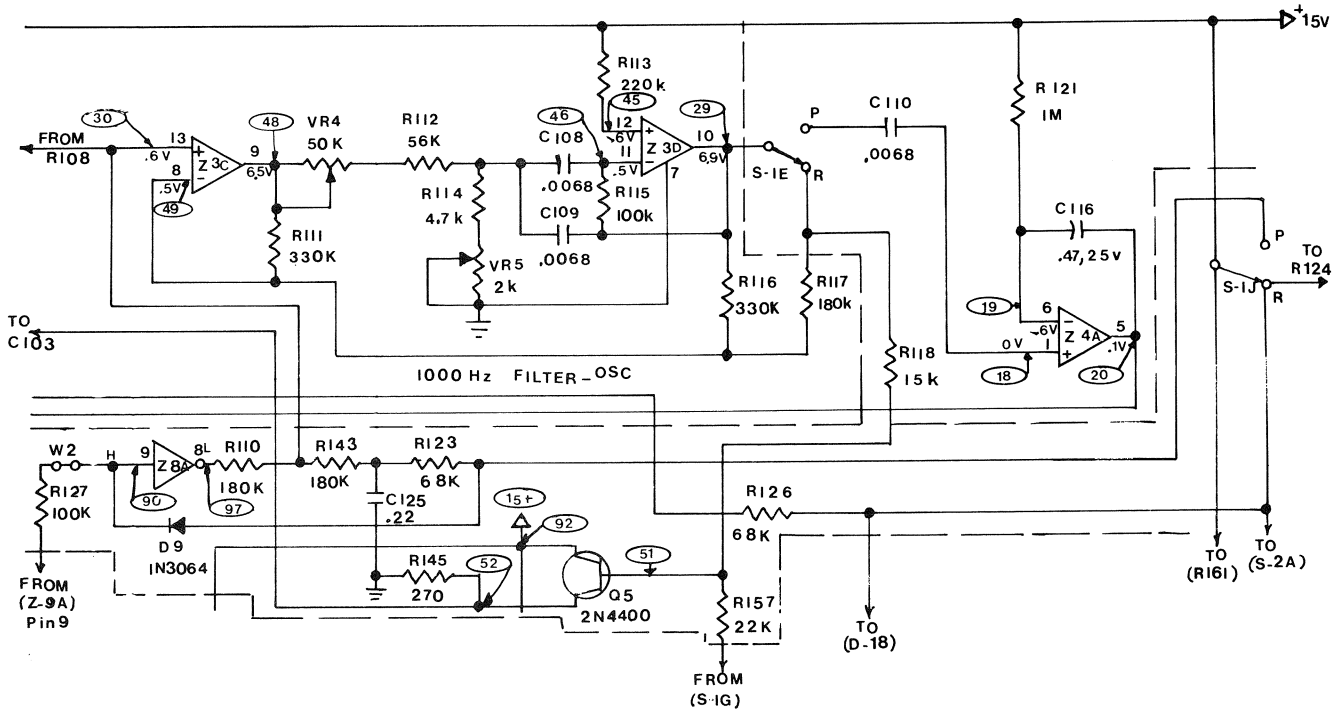

Figure 4-39. 1000 Hz Oscillator

MANUAL REVERSE

The Manual Reverse Circuit in the 3350 Models is identical in operation to that in the 3320 and 3330 Models, (See Manual Reverse, Section IV, Para. A.4.b. 3320). The only difference in these circuits is the use of Inverter (Z-8C) in place of NAND GATE (Z-6D). This is because (Z-6D) is now needed in the bistable multivibrator used to control the timing of the Stop Pulses in the Record Mode, and (Z-8C) is not needed for any other function (Figure 6-17), manual Reverse functions either in the Playback or Record Mode.

4. TAPE DRIVE CONTROL CIRCUIT

The basic tape drive control circuit in the 3350 Models functions exactly the same as that in the 3330 Models. (See Tape Drive Control Logic Circuit, Section IV, Para. B.3. 3330). The primary difference is the addition of inverter (Z-8D), Capacitor (C-132) and Resistor (R-175) which are used in conjunction with the microphone ON/OFF function. (Figure 4-40).

When the microphone is plugged in, the ON/OFF switch in the microphone is inserted in place of the normally closed contacts of the microphone jack (J-17). With the switch in the "ON" position, a ground (Logic Low) is connected to Pin 11 of (Z-7B). Since Pins 9, 10 and 12 are also low, the output of (Z-7B) is a logic high which allows (Q-8) to conduct permitting the tape drive motor to run. When the switch is in the "OFF" position, the ground is removed from Pin 11 and the +15 supply voltage is coupled to it through (R-164) and (R-175). This logic high causes (Z-7B) to conduct and provide a logic low at its output, which cuts off (Q-8) and stops the tape drive motor. The logic low is also coupled to Pin 2 of (Z-7A) and along with the lows on Pins 3, 4 and 5 cuts it off to produce a logic high at its output. (Q-7) now conducts, the Red LED (D-20) lights, and the Auto-Stop circuit is over-ridden by the positive voltage to the base of (Q-10) from the emitter of (Q-7). Thus, even though the tape stops, the Auto-Stop Solenoid does not release the tape drive mechanism.

When the Microphone ON/OFF switch is now operated to the "ON" position, the ground is reconnected to Pin 11 of (Z-7B). However, (Z-7B) will not be cut off by this ground since a high is held on Pin 12 by the output of (Z-7A). Therefore a means must be employed to turn (Z-7A) on and change its output to a low to cut off (Z-7B) and allow (Q-8) to conduct again so the tape drive motor can run. This is where the inverter (Z-8D), Capacitor (C-132) and Resistor (R-175) come in.

The ground which is introduced into the circuit above is also immediately coupled to Pin 13 of (Z-8D) through (R-175) and (C-132). This logic low is inverted to a logic high by (Z-8D) and applied to Pin 3 of (Z-7A) causing it to conduct and produce the desired logic low at its output to cut (Z-7B) off and make its output go positive. Eventually (C-132) charges fully, the logic high reappears at the input of (Z-8D), is inverted to a logic low at its output and conditions (Z-7A) to respond to the next stop information.

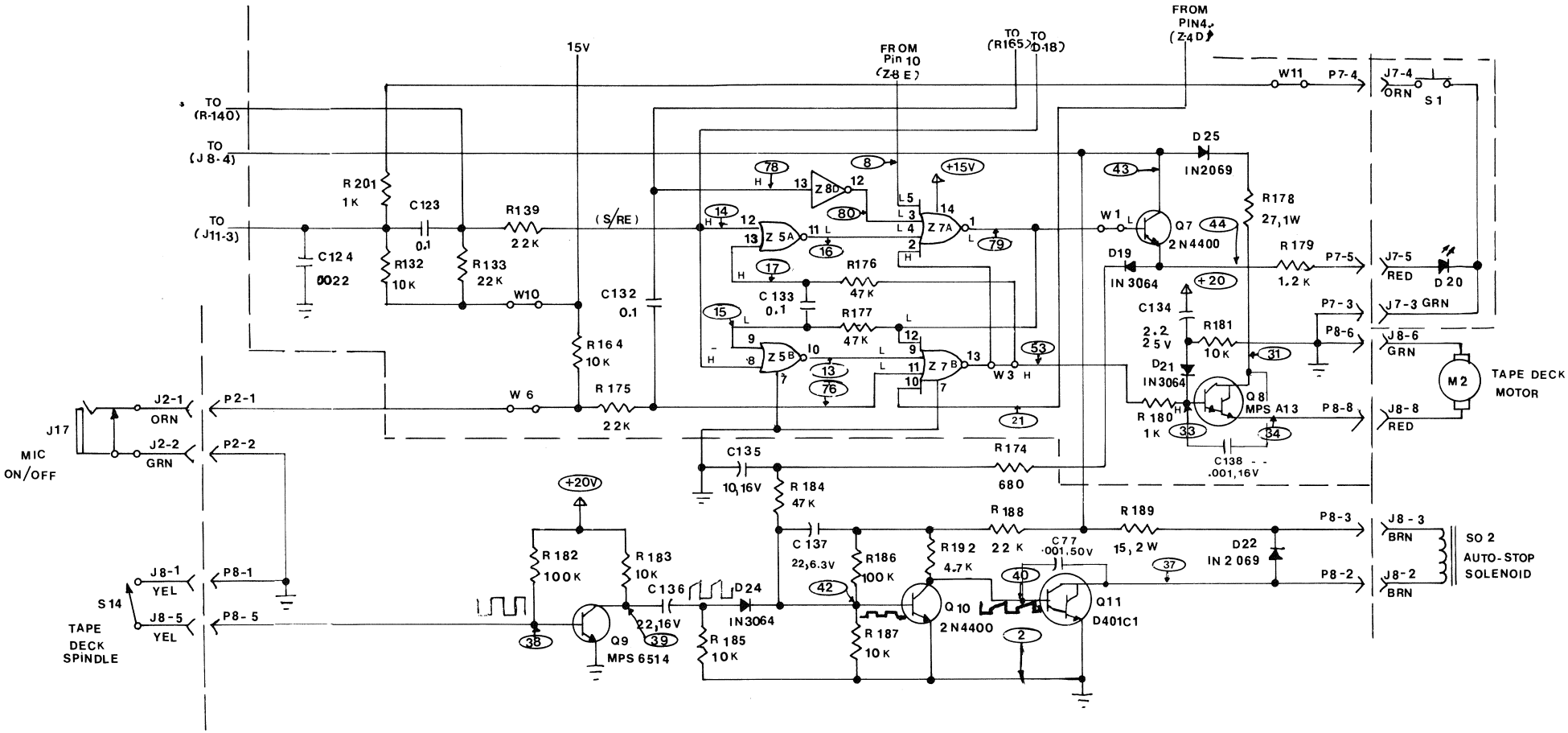

Figure 4-40. TAPE DRIVE CONTROL

RECORD MODE

The Stop/Restart button (S-1) is what initiates the action which results in Stop pulses being recorded on the tape. Since this is the case, the tape drive control circuit must be disabled in the record mode so the tape deck motor won't stop each time the Stop/Restart button (S-1) is depressed to record a Stop Pulse. This is accomplished by connecting the +15 supply voltage through the (S1J) (R) contact of the Record switch and diode (D-18) to Pins 12 and 8 of (Z-5A) and (Z-5B) respectively. (Figure 4-39). This continuous logic high overrides the Stop/Restart Pulses which are normally applied there when the Stop/Restart button is depressed.

5. STOP PULSE DETECTION CIRCUIT

PLAYBACK MODE

In the Playback Mode, the stop pulse detection circuit in the 3350 Models functions identically as that in the 3330 Models. The 150 Hz pulses which are amplified by the cue preamp (Z-3A) and (Z-3B) are fed through (C-107) and (R-109) to Pin 13 of (Z-4B). The output of (Z-4C) is fed through the (P) contact of Record Switch Section (S-1G) to the Stop Ramp Detector (Z-4D) which converts the signal to a positive going voltage for triggering (Z-7B) (Figure 6-17).

One difference exists in the way the stop pulse detecting circuit is disabled when the machine is started with the Stop/Restart button. As will be described under Record Mode below, the Stop/Restart button triggers a timer which causes (Z-6D) to put out a logic high for 500 ms. This high is coupled to Pin 13 of (Z-4B) and drives it into saturation so it will not respond to any stop pulse signals for 500 ms after the Stop/Restart button is depressed. As is the case in the 3330 Models this is done to prevent the Stop Pulse Detecting Circuit from immediately responding to 150 Hz Stop Pulses when the tape transport mechanism is restarted.

RECORD MODE

In the Record Mode, record switch section (S-1G) transfers from the (P) to the (R) contact, which conditions the 150 Hz Filter-Oscillator to be an oscillator. The circuit will oscillate at 150 Hz when a logic high is introduced on Pin 13 of (Z-4B). This logic high is produced by the bistable multivibrator (Z-9C) and (Z-6D) when the Stop/Restart button is depressed. It remains on Pin 13 of (Z-4B) for approximately 500 ms. A 500 ms, 150 Hz Stop Pulse is thus produced by the oscillator and is coupled through the (R) contact of (S-1G) and R-157) to the base of emitter-follower (Q-5). From the emitter of (Q-5) the 150 Hz, 500 ms Stop Pulse is coupled through (C-103), (R-103) and the (R) contact of (S-1C) to the cue channel tape head where it is recorded on tape.

As mentioned above, the bistable multivibrator is started through its 500 ms cycle by depressing the Stop/Restart button, which introduces a momentary logic low on Pin 6 of (Z-6D). The momentary low is also applied to Pin 11 of (Z-9B). The result is that both of these NAND GATES stop conducting and their outputs go high. Both highs are coupled to inputs of (Z-9C) (Pins 3 and 5) causing it to conduct and produce a logic low at its output (Figures 4-36 and 4.40). This low is coupled back to Pin 5 of (Z-6D) to hold it cut off, maintaining the logic high at its output.

The logic high at the output of (Z-9B) also starts the timer (Z-8B) through its cycle as described under Section IV, Para. A.4.a, Tray Control Logic Circuits, Manual Advance. The timer holds (Z-9B) cutoff for approximately 500 ms sustaining the logic high at its output for this duration.

When the timer completes its cycle, a logic high re-appears on Pin 13 of (Z-9B) allowing it to conduct resulting in a logic low at its output. This low cuts off (Z-9C), its output goes high and allows (Z-6D) to conduct so its output goes low.

The result of this sequence of events is the sustaining of (Z-9C) conducting and (Z-6D) cut off for 500 ms after which time they return to their normal condition. The 500 ms logic high on the output of (Z-6D) causes the 150 Hz oscillator (Z-4B) and (Z-4C) to produce one 500 ms, 150 Hz Stop Pulse for recording on the tape as described above.

6. ERASE AND CUE CHANNEL BIAS

A DC Erase Circuit is used for erasing information from both the Audio and Cue Channels. Biasing for the cue channel Record/Play Head is also DC.

DC Erase Current for the Cue Channel is supplied when the Record button is depressed and the contacts on the Record switch, Section (S-1J) transfer from (P) to (R). This connects the +15 supply voltage across (R-124), (D-12) and the Cue Channel Erase Head (H-2). (D-12) is a green L.E.D. which lights on the front of the projector to indicate that the Record button has been depressed and current is flowing in the Cue Channel Erase Circuit. (Figure 41).

DC bias current is supplied for the cue channel Record/Play Head by the same switch contacts through (R-126) and the Record switch section (S-1C).

DC erase current for the Audio channel is supplied through Record switch Section (S-1J) and Microphone switch Section (S-2A) when the microphone is inserted in the microphone jack (J-16) and (J-17).

It is possible to erase and record cue pulses, both advance and stop, without affecting audio already recorded on channels 1 and 2 of the tape. This is accomplished by leaving the microphone unplugged and depressing the "Play" and "Record" buttons. Advance pulses are then recorded by depressing the Manual advance button, and Stop Pulses by depressing the Stop/Restart button.

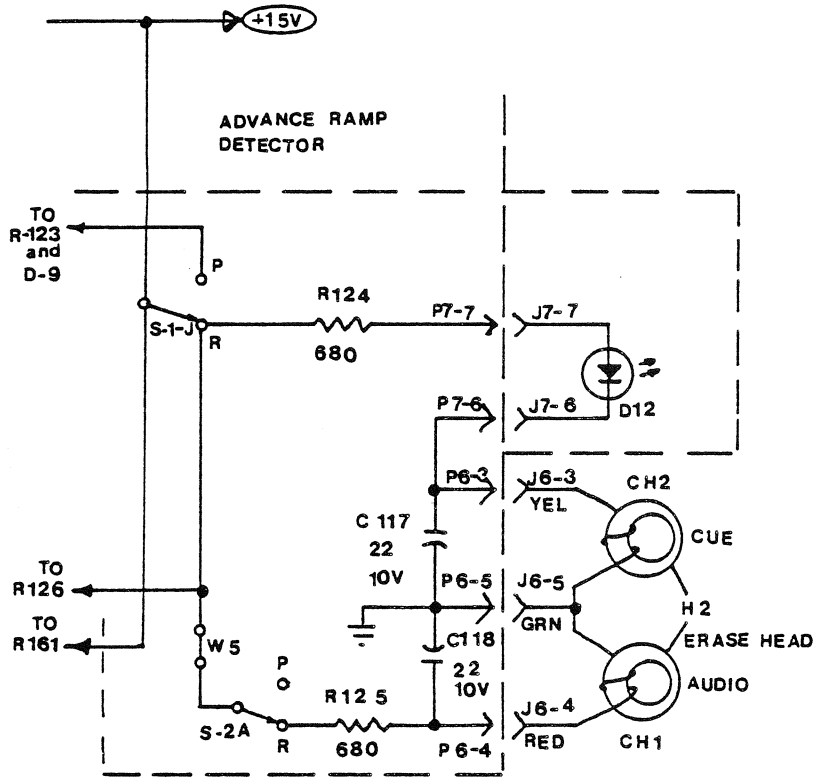

Figure 4-41. Erase Circuit

7. PRECONDITIONING CIRCUIT

The advance multivibrator (Z-6A)-(Z-9A) and stop pulse multivibrator (Z-6D)-(Z-9C) (Figure 4-36), the reverse multivibrator (Z-6B)-(Z6C) (Figure 6-17), and the tape drive control multivibrator (Z-7A)-(Z-7B) (Figure 4-40) must be all preconditioned when the projector is first turned on to insure that it won't immediately advance one slide, reverse one slide or stop. Preconditioning is accomplished by inverter (Z-8E).

When power is initially turned on, pin 11 of (Z-8E) initially feels a momentary ground (logic low) due to the charging action of (C-126). This results in a momentary high at its output, Pin 10. These two logic levels perform all preconditioning of the above four multivibrators.

The momentary low is connected directly to Pin 4 of (Z-9C) and Pin 1 of (Z-9A). This insures that neither of these NAND GATES will conduct and guarantees a logic high at their outputs. This also guarantees a logic low at the output of (Z-6D) and (Z6A) respectively. Thus these two multivibrators are properly preconditioned when the projector is initially turned on.

The momentary high at the output of (Z-8E) is connected to Pin 5 of (Z-7A), and through (D-16) to Pin 8 of (Z-6B) and Pin 11 of (Z-6C). The high on these three gates insures that a logic low will be at the outputs of (Z-7A) and (Z-6B) and a logic high at the outputs of (Z-7B) and (Z-6C) respectively. Thus these multivibrators are properly preconditioned when the projector is initially turned on.

When (C-126) becomes fully charged, Pin 11 of (Z-8E) goes high since it is connected to the +15 supply voltage through (R-141), and the output of (Z-8E) goes low. These logic levels establish the operating characteristics of three of the four multivibrators in question. The reverse multivibrator is unaffected by the low output of (Z-8E) as it is blocked by (D-16).

D. 3340 RECORD/PLAY - NO STOP PULSE

Circuitry in the Caramate 3340 Models is virtually identical to that in the other Caramate Models and has already been explained. The following table lists the various circuits under the model where the explanation appears.

Circuit	Model and Section			
	3320	Section	3350	Section
AC Power Supply	X	1		
Advance Cue Detection	X	3	X	3
Advance Ramp Detector	X	4		
Auto-Stop Detector and Tape Drive	X	5		
DC Power Supply			X	1
Audio Circuits			X	2
Tray Control Logic			X	3
Erase and Cue Channel Bias			X	6
Preconditioning Circuit			X	7

Within the above listed circuits, there are three Minor Variations that involve the Advance Cue Detector Circuit, the Advance Ramp Detector and the Auto-Stop Detector and Tape Drive.

1. ADVANCE CUE DETECTION CIRCUIT

The basic difference in the Advance Cue Detection Circuit is found in the logic circuit which conditions the 1000 Hz filter-oscillator (Z-3C) and (Z-3D) in the playback and record models. In the Caramate 3350 models this conditioning is done by inverter (Z-8A) (Figure 4-39) while it is accomplished by a NOR GATE (Z-5A) in the Caramate 3340 Models, (Figure 4-42).

PLAYBACK MODE. A continuous logic high is applied to Pin 13 of NOR GATE (Z-5A) from the +15 supply voltage through the (P) contact of the record switch section (S-1J). This is coupled through (R-110) to Pin 13 of (Z-3C) to condition it to respond to incoming 1000 Hz cue pulses.

RECORD MODE. When the Record and Play buttons on the front of the projector are depressed, the contact of the Record switch section (S-1J) transfers from (P) to (R). This removes the logic high from Pin 13 of (Z-5A) and allows it to go low. Now control over (Z-5A) reverts to the output of (Z-9A), and (Z-5A) functions as an inverter. The circuit now functions identically as (Z-6A), (Z-9A) and (Z-8A) in the Caramate 3350 Models.

2. ADVANCE RAMP DETECTOR

The only difference between the Advance Ramp Detector in the Caramate 3340 Models and that in the Caramate 3320 Models is in the use of Inverters (Z-8D) and (Z-8A) (Figure 42) in place of NOR GATES (Z-5A) and (Z-5B) (Figure 10) wired as Inverters. The function of the circuit is identical.

3. AUTO-STOP DETECTOR AND TAPE DRIVE CIRCUIT

The microphone ON/OFF feature is the area of difference in the Auto-Stop Detector and Tape Drive Circuit in the Caramate 3340 Models (Figure 4-43).

A ground is supplied for the Tape Drive Motor (M-2) Circuit through the normally closed contacts of the microphone ON/OFF Jack (J-17). When a microphone is inserted into this jack, the ON/OFF switch on the microphone is substituted for these contacts. In the "ON" position, the contacts of the microphone switch are closed and the ground is supplied to allow the tape Drive Motor (M-2) to run. In the "OFF" position, the Microphone Switch contacts open, removing the ground and stopping the Tape Drive Motor (M-2).

At the same time, the positive voltage felt on the Emitter of (Q-8) is coupled through the Tape Drive Motor (M-2) and (R-184) to the base of (Q-10). The positive voltage sustains conduction of (Q-10) holding its collector at a very low voltage and thus preventing (Q-11) from conducting through the Auto-Stop Solenoid (SO-2). The effect of this is to prevent this Solenoid from releasing the Tape Drive Mechanism when the Tape Drive Motor (M-2) is stopped by means of the microphone "ON/OFF" switch.

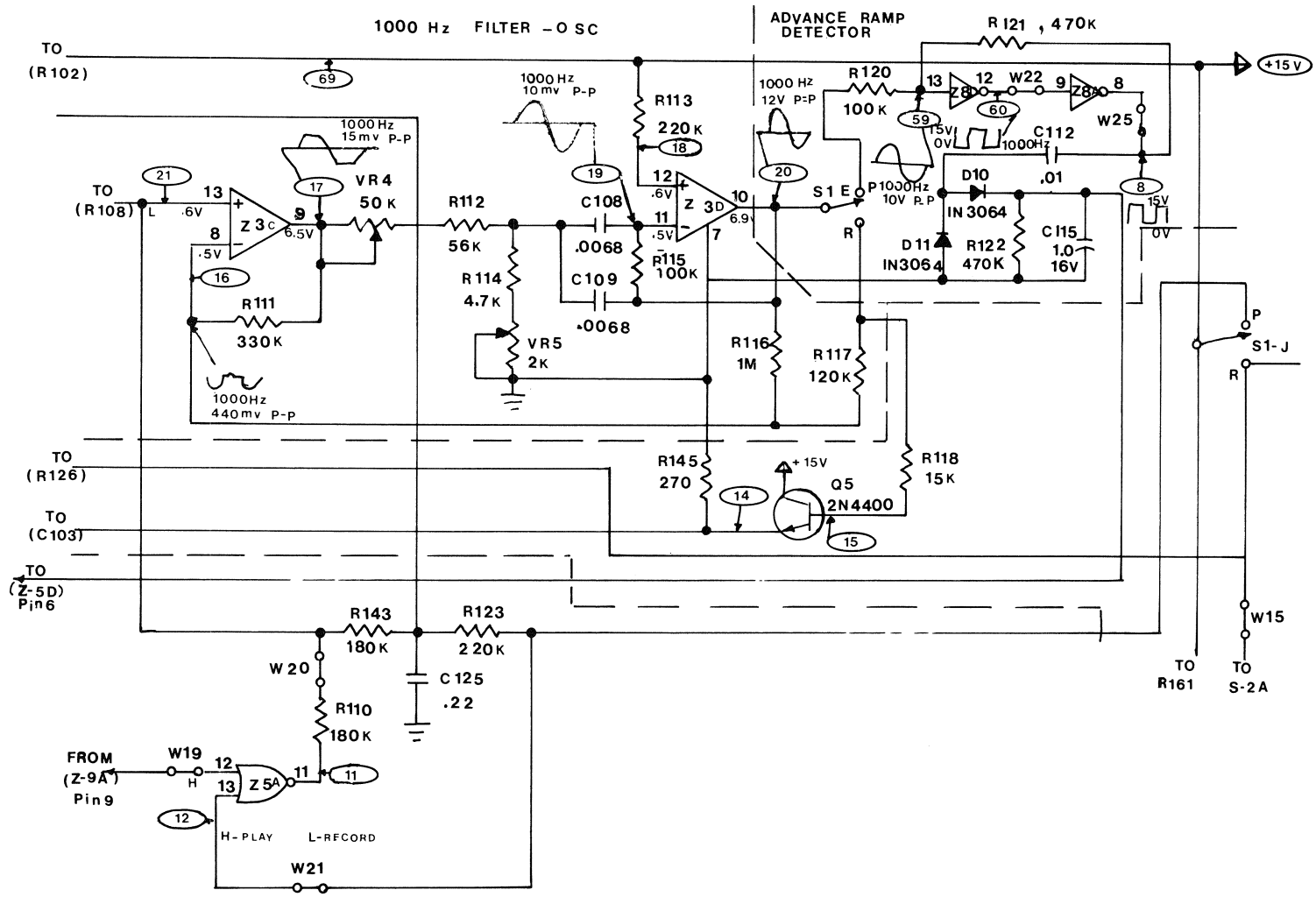

Figure 4-42. 1000Hz FILTER/OSCILLATOR, ADVANCE RAMP DETECTOR AND CONDITIONING CIRCUIT.

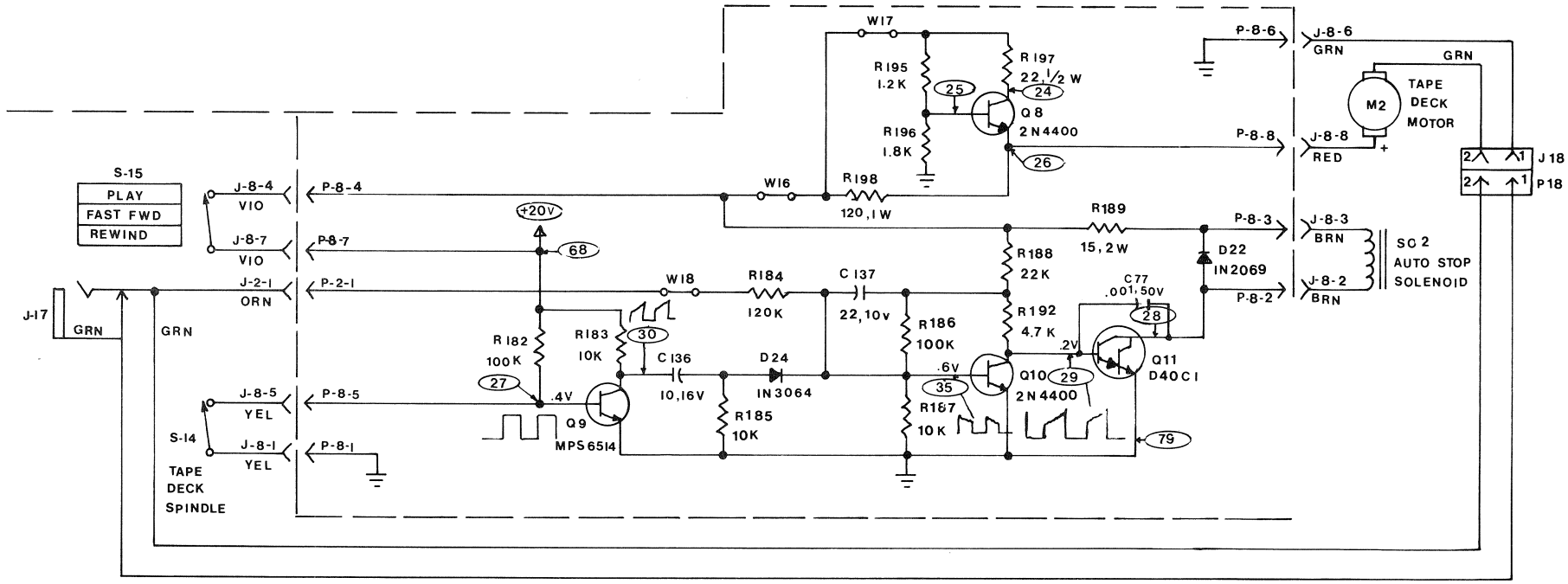

Figure 4-43. TAPE DRIVE CONTROL

SECTION V

5. ELECTRONIC ADJUSTMENTS & SPECIFICATIONS

The electronic adjustments and specifications are subdivided into two sections.

1. Operational test - Performed with Specially Programmed Singer Test Tapes (Kit SS 345). These tapes provide all cue pulse and audio frequencies and levels required to adjust and check the operation of the Caramate 3300 Projectors without the need of additional signal generators.

NOTE: All Singer Education Systems Test Tapes have been held to extremely rigid Quality Control Specifications. It is therefore suggested that only these tapes be used for tests and adjustments as levels on other standard test tapes may vary by as much as 3db.

2. Circuit Tests-Are provided in the event that difficulty is experienced meeting operational test requirements. These tests will allow the technician to check and adjust electronic circuitry apart from other functions of the machine. They will also be helpful in troubleshooting the electronic circuits.

A. OPERATIONAL TESTS

1. Azimuth Adjustment - The Azimuth adjustment is most easily made before disassembling any part of the Caramate 3300 Projectors by utilizing a test speaker or dummy 8ohm load (preferably the speaker). If a test speaker is not available, an alternate method is described in Section A. 2.

a. Insert an Azimuth Test Tape (Philips TC-A 6.3 Azimuth test 6300 Hz. or equivalent) in the tape deck.

b. Plug an 8ohm Test Speaker (or 8ohm dummy load) into the speaker jack (J-14) on the left side of the projector.

c. Connect an AC VTVM or an oscilloscope across the test speaker.

d. Remove the plug from the left side panel exposing the Azimuth adjusting screw.

e. Operate the "ON/OFF" Switch (S-4) on the front of the projector to "ON".

f. Depress the "PLAY" button on the front of the projector.

g. Adjust the volume and tone controls for comfortable audio output from the test speaker.

h. With a #0 Phillips Screwdriver, adjust the Azimuth adjusting screw for a maximum reading on the VTVM or oscilloscope. After adjustment , apply a drop of Glyptal (Part No. 39490P1) to the head of the Azimuth Screw to lock it in place.

j. Depress the "Stop/Eject" button twice and remove the Azimuth Test Tape.

k. Replace the plug removed in Step(d).

In order to make the remaining tests and adjustments in this section, access must be gained to the Circuit Board in the Caramate 3300 Projectors. This is accomplished as follows:

1. Remove seven screws from the back panel and remove the back panel.

2. Slide the left side panel toward the rear of the machine until the tabs on the top of the side panel line up with the notches in the upper housing. Tip the top of the side panel out and lift it up slightly to remove it from the main housing of the projector.

2. AZIMUTH ADJUSTMENT (ALTERNATE METHOD)

a. Connect an AC VTVM or an oscilloscope to the tip and sleeve connections of the speaker jack (J-14).

b. Perform steps (a) and (d) through (k) of the Azimuth adjustment procedure above.

NOTE: If the advance and stop cue circuits in the Caramate 3300 under consideration are in definite need of adjustment, Sections A. 3. and A. 4. will provide the necessary details for doing so. However, if the projector seems to be functioning properly and is only in need of checking, refer to step level evaluation tests, Section A. 6.

3. ADVANCE CUE PULSE TUNING AND SENSITIVITY - 1000 HZ

a. Insert Singer Education Systems Test Tape (SS 345C) into the tape deck.

b. Connect an AC VTVM or an oscilloscope between ground and the output of the 1000Hz filter circuit by referring to the Chart below for the specific model involved.

Circuit	Test Points			
	3320	3330	3340	3350
Ground	54	72	79	2
1000Hz Filter Output	44	31	20	29

c. Operate the "ON/OFF" Switch (S-4) on the front of the projector to "ON".

d. Depress the "PLAY" button on the front of the projector.

Note: The first 3½ minutes of recorded information on this tape are continuous 50 Hz signals which will have no affect on Caramate 3300 projectors.

The next three minutes of recorded information is a continuous 1000Hz signal recorded at -10db on tracks 3 and 4. This signal is used for adjusting the advance cue pulse tuning and sensitivity on the Caramate 3300 Projectors.

e. The following chart is a breakdown of the Potentiometers used for adjusting the sensitivity and tuning of the advance cue pulse circuit in the various Caramate 3300 Models.

Adjustment	Potentiometer			
	3320	3330	3340	3350
Sensitivity	VR 3	VR 3	VR 4	VR 4
Tuning	VR 4	VR 4	VR 5	VR 5

f. Adjust the sensitivity Potentiometer for a minimum reading on the VTVM or Oscilloscope connected in step b.

g. Adjust the tuning Potentiometer for a maximum reading on the VTVM or Oscilloscope.

h. Adjust the sensitivity Potentiometer for a reading of 4 volts RMS (12 volts peak-to-peak) on the VTVM or Oscilloscope.

j. Depress the "STOP/EJECT" button on the front of the projector.

k. If the model being adjusted has no Stop Pulse feature, or if the Stop Pulse feature is functioning properly and not in need of adjustment, rewind the tape. Depress the "STOP/EJECT" button, remove the tape and proceed to Step Level Evaluation Tests, Section A. 6. Otherwise, proceed with Stop Cue Pulse Tuning and Sensitivity, Section A. 4.

Note: See Alternate Method for Adjusting Advance Cue Pulse Tuning and Sensitivity Record Models, Section A. 7.

4. STOP CUE PULSE TUNING AND SENSITIVITY

a. Immediately following the three minutes of continuous 1000 Hz signal recorded on tracks 3 and 4 of the test tape (SS-345C) are two minutes of a continuous 150Hz signal recorded at -10db on tracks 3 and 4. This signal is used for adjusting the stop cue pulse tuning and sensitivity on the Caramate 3300 Projectors.

b. Operate the "ON/OFF" switch (S-4) on the front of the projector to "OFF".

c. Connect the VTVM or Oscilloscope between ground and the output of the 150Hz filter circuit by referring to the chart below for the specific model involved.

Circuit	Test Point	
	3330	3350
Ground	72	2
150Hz Filter Output	71	27

d. Connect a jumper from the output of the Tape Drive Control Logic Circuit to the +15 supply voltage according to the chart below.

Circuit	Test Point	
	3330	3350
TDCL Circuit Output	51	53
+15 Supply Voltage	66	92

e. Operate the "ON/OFF" switch (S-4) on the front of the projector to "ON".

f. Depress the "PLAY" button on the front of the projector.

g. The following chart is a breakdown of the Potentiometers used for adjusting the sensitivity and tuning of the stop cue pulse circuit in the 3330 and 3350 Models.

Adjustment	Potentiometer	
	3330	3350
Sensitivity	VR 5	VR 6
Tuning	VR 6	VR 7

h. Adjust the sensitivity Potentiometer for a minimum reading on the VTVM or Oscilloscope connected in Step c.

j. Adjust the tuning Potentiometer for a maximum reading on the VTVM or Oscilloscope.

k. Adjust the sensitivity Potentiometer for a reading of 4 volts RMS (12 volts peak-to-peak) on the VTVM or Oscilloscope.

m. Depress the "STOP/EJECT" button on the front of the projector.

n. Remove the jumper installed in Step (d) above.

p. If no further tests are to be made, rewind the test tape. Depress the "STOP/EJECT" button on the front of the machine. Remove the test tape and proceed to Step Level Evaluation Tests, Section 6 Otherwise, proceed to Audio Tests and Requirements Section A. 5.
Note: See Alternate Method for Adjusting Stop Cue Pulse Tuning and Sensitivity - Record Models, Section A. 7.

5. AUDIO TESTS AND REQUIREMENTS

a. Immediately following the two minutes of continuous 150 Hz signal recorded on tracks 3 and 4 of the test tape (SS-345C) are two continuous signals of 1000 Hz @ -6db & 150 Hz @ -6db, each about 20 to 30 seconds long, recorded on tracks 3 and 4 of the test tape. These are reference signals which correspond to the ANSI Standard Nominal Level for Advance & Stop pulses. Caramate 3300 projectors should advance once during the 1000 Hz signal and stop during the 150 Hz signal. If restarting is attempted, the projector will immediately stop again and will continue doing so until the entire 20 seconds of 150 Hz has finally passed by the tape head with this stopping and starting action.

b. Connect the AC VTVM or Oscilloscope to the tip and sleeve connections of the speaker jack (J-14).

NOTE: A test speaker or dummy load may be used for these tests by following the procedure under azimuth adjustment (A., 1., (b) and (c).

c. Depress the "PLAY" button on the front of the projector.

d. Immediately following the 20 seconds of the 150 Hz recorded on tracks 3 and 4 are 5 reference signals of 20 second duration recorded on tracks 1 and 2. They are 150 Hz @ -6db, 1000 Hz @ -6db, 315 Hz @ -4db, 50 Hz @ -10db and 50 Hz @ -6db.

e. The 150 Hz signal will have no significant affect on the audio circuits.

f. The 1000 Hz signal at -6db should be audible from the speaker and undistorted output of 6.4 to 7.1 volts RMS (18 to 20 volts P-P) should be obtainable by varying the volume and tone controls.

g. The third signal of 315 Hz @ -4db is the ANSI Standard Reference Level for audio. It should be audible from the speaker and able to produce an undistorted output of 6.4 to 7.1 volts RMS (18 to 20 volts P-P) with the adjustment of the volume and tone controls.

h. The fourth and fifth signals of the 50 Hz will also have no affect on the audio circuits.

j. Depress the "STOP/EJECT" button on the front of the projector and rewind the tape by depressing the rewind button. Remove the tape from the projector.

6. STEP LEVEL EVALUATION TESTS

a. Insert Singer Education Systems test tape (SS-345A) into the tape deck.

b. Depress the "PLAY" button on the front of the projector.

c. The first two signals are 10 second reference signals recorded on tracke 3 and 4 which provide an immediate check of the advance pulse circuits. Caramate 3300 projectors should advance once with each of these two 1000 Hz advance signals.

If desired, a quick check of the advance circuits can be made at this time by making all test connections specified in the Advance Cue Pulse Tuning and Sensitivity 1000Hz, Section A. 3.

d. The next 10 seconds of recorded information is a 315 Hz signal recorded at -4db on tracks 1 and 2. This is the ANSI Standard Reference Level for audio. If desired, a quick check of the audio circuits can be made at this time by making all test connections specified in the Audio Tests and Requirements, Section A. 5.

e. The next information is a series of 1000 Hz pulses, each 440 milliseconds long but decreasing in level, recorded on tracks 3 and 4. There are three pulses recorded at -3db, three at -9db, three at -12db and so on in 3db steps down to- 30db. These pulses are followed by another three pulses at -3db. The Caramate 3300 projectors should advance one slide on all pulses through the -21db level but should not from -24db to -30db.

f. Refine the adjustment on the sensitivity potentiometer to achieve this requirement. This may require rewinding and playing this tape several times and adjusting the sensitivity potentiometer in increments until this requirement is met.

g. Following the 1000 Hz pulses at -3db, fifteen pulses are recorded which check the machine's marginal operating characteristics. These are three "Long-Strong" pulses of -3db for 520 milliseconds, three nominal level-short duration pulses of -6db for 380 milliseconds and three " Short-Weak" pulses of -9db for 380 milliseconds, followed by six pulses, three of 950 Hz at -10db for 380 milliseconds and three of 1050 Hz at -10db for 380 milliseconds, which check the bandwidth of the 1000 Hz cue pulse detecting circuitry. Caramate 3300 projectors should advance once for each of the fifteen pulses.

h. The next 15 pulses are 150 Hz and are used to check the sensitivity and bandwidth of the Stop Pulse Detecting Circuitry ONLY (the projector will not advance with these pulses). The first 3 pulses are "Long-Strong" pulses of 150Hz at -3db for 520 ms. These are followed by 3"Short -Weak" pulses of 150 Hz at -9db for 380 ms. Following these are 3 pulses of 150 Hz at -30db for 520 ms. After these are 3 pulses of 142 Hz at -10db for 380 ms and 3 pulses of 158 Hz at -10db for 380 ms. Caramate 3300 projectors should stop on each of these pulses except the three 150 Hz pulses at -30db for 520 ms.

j. The next three signals on this tape are 1000 Hz at -10db, 150 Hz at -10db and 150 Hz at -6db, each 20 to 30 seconds in duration, recorded on tracks 3 and 4. These signals may be used for checking and adjusting the advance and stop circuits according to Sections A. 3. and A. 4. respectively of these instructions.

k. The last two signals are ANSI Standard Reference signals of 315 Hz @ -4db recorded on tracks 1 and 2 and 1000 Hz @ -6db recorded on tracks 3 and 4. These may be used for a final verification of the audio and advance circuits respectively.

7. ALTERNATE METHOD FOR ADJUSTING ADVANCE CUE PULSE TUNING AND SENSITIVITY - RECORD MODELS

a. This procedure allows the technicians to adjust the Advance Cue Pulse Circuitry in Record Models Only without the use of special test tapes or signal generating equipment. However, a frequency meter will be required to make the following adjustments.

b. Insert a dummy Record cassette or blank record tape in the tape deck.

c. Connect Pin 5 of plug (P-9) to ground.

d. Connect the frequency meter and a VTVM or Oscilloscope between ground and the output of the 1000Hz Filter/Oscillator (Z-3D) by referring to the chart below.

Circuit	Test Point	
	3340	3350
Ground	79	2
Filter/Osc. Output	20	29

e. Depress the "PLAY" and "RECORD" buttons on the front of the projector.

f. Depress and hold the Manual Advance Button on the upper left side of the projector.

g. Adjust (VR-4) for a minimum reading on the VTVM or Oscilloscope connected in Step (d).

h. Adjust (VR-5) for a reading of 1000Hz on the frequency meter connected in Step (d)

j. Adjust (VR-4) for a reading of 4 volts RMS (12 volts peak-to-peak) on the VTVM or Oscilloscope.

k. Depress the "STOP/EJECT" button on the front of the projector.

m. If the Stop Cue Pulse Tuning and Sensitivity are to be adjusted, proceed to Alternate Method for Adjusting Stop Cue Pulse Tuning and Sensitivity-Record Models, Section A. 8.

Otherwise, depress the "STOP/EJECT" button, remove the dummy cassette or blank tape and proceed to Step Level Evaluation Tests, Section A. 6.

8. ALTERNATE METHOD FOR ADJUSTING STOP CUE PULSE TUNING AND SENSITIVITY - RECORD MODELS

a. This procedure allows the technician to adjust the Stop Cue Pulse Circuitry in Record Models Only without the use of special test tapes or signal generating equipment. However, a frequency meter will be required to make the following adjustments.

b. Insert a dummy record cassette or blank record tape in the tape deck.

c. Connect test point 98 to ground.

d. Connect the frequency meter and a VTVM or Oscilloscope between ground and test point 27 (output of the 150Hz filter/ Oscillator).

e. Depress the "PLAY" and "RECORD" buttons on the front of the projector.

f. Adjust (VR-6) for a minimum reading on the VTVM or Oscilloscope connected in Step (d).

g. Adjust (VR-7) for a reading of 150Hz on the frequency meter connected in Step (d).

h. Adjust (VR-6) for a reading of 4 volts RMS (12 volts peak-to-peak) on the VTVM or Oscilloscope.

j. Depress the "STOP/EJECT" button on the front of the projector twice and remove the dummy cassette or blank tape. Proceed to Step Level Evaluation Tests, Section A. 6.

9. RECORD BIAS OSCILLATOR ADJUSTMENT

a. Insert a dummy Record cassette or blank Record tape in the tape deck.

b. Connect a VTVM or Oscilloscope between ground and test point "B".

c. Depress the "PLAY" and "RECORD" buttons on the front of the projector.

d. Move the "MIC" switch on the left side of the projector in the direction of the arrow molded on the switch and hold it operated.

Note: A dummy microphone plug may be inserted in the microphone jack to hold the "MIC" switch in the above position. The plug should be a shorted plug to prevent noise from being introduced into the amplifier.

e. Adjust the bias level potentiometer (VR-3) for a reading of 10.5 to 12.4 volts RMS (30 to 35 volts peak-to-peak) on the VTVM or Oscilloscope connected in Step (b).

Note: The bias Oscillator frequency is approximately 50KHz and can be determined by measuring it at test point "B" with a frequency meter or lissajous pattern on the Oscilloscope. The frequency is not critical.

B. CIRCUIT TESTS

CAUTION: In making Circuit Tests, the technician will be injecting his own signals into the circuitry of the Caramate 3300 Models. Since the input amplifiers are very high gain amplifiers, extreme care should be taken that stray signals which could cause erroneous results are not picked up on input leads and fed into the amplifiers. Lead positioning and placement is often critical.

Proper grounding of all test equipment is also very critical to prevent this from happening.

1. ADVANCE CUE PULSE TUNING SENSITIVITY 1000Hz

a. Connect a voltage dividing network of 220,000ohms and 220ohms across the output of a signal generator.

b. Disconnect the cue channel input connector from the main circuit board according to the chart below.

Models	Cue Channel Input Connector
3320 & 3330	J1
3340 & 3350	J6

c. Connect the output from the 220ohm portion of the above voltage divider to the circuit board according to the chart and diagram

Circuit	Model, Jack and Pin			
	3320 & 3330		3340 & 3350	
	Jack	Pin	Jack	Pin 1
Cue Channel Input	J 1	5	J 6	1
Ground	J 1	4	J 6	2

d. Adjust the signal generator for an output of 1000Hz at 300 millivolts. This will apply a signal to the Caramate Advance Cue Circuit of 1000Hz at approximately 300 microvolts.

e. Connect an AC VTVM or an Oscilloscope between ground and the output of the 1000Hz filter circuit by referring to the chart below for the specific model involved.

Circuit	Test Point			
	3320	3330	3340	3350
Ground	54	72	79	2
1000Hz Filter Output	44	31	20	29

f. Operate the "ON/OFF" switch (S-4) on the front of the projector to "ON". (Record models must be in the PLAYBACK Mode).

g. Adjust the sensitivity Potentiometer for a minimum reading on the VTVM or Oscilloscope connected in Step e. (The chart following is a breakdown of the correct Potentiometers to adjust for the various Caramate 3300 Models).

Adjustment	Potentiometer			
	3320	3330	3340	3350
Sensitivity	VR 3	VR 3	VR 4	VR 4
Tuning	VR 4	VR 4	VR 5	VR 5

h. Adjust the tuning Potentiometer for a maximum reading on the VTVM or Oscilloscope.

j. Adjust the sensitivity Potentiometer for a reading of 4 volts RMS (12 volts peak-to-peak) on the VTVM or Oscilloscope.

k. If no tests are to be made on the Stop Cue Pulse Circuits, turn power "OFF". Remove the test equipment connected in Step e. replace the connector removed in Step b and perform Step Level Evaluation Tests, Section A.6. Otherwise, leave all test equipment connected and proceed to the next section, Stop Cue Pulse Tuning and Sensitivity - 150Hz. Make sure power is turned off before proceeding.

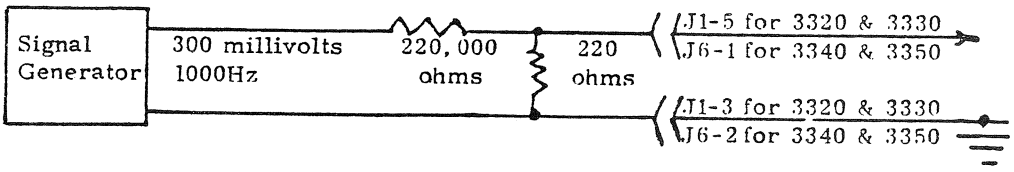

2. STOP CUE PULSE TUNING AND SENSITIVITY 150Hz

a. If not already done, establish the test set-up outlined in steps (a) through (c) of section B.1. (Advance Cue Pulse Tuning and Sensitivity - 1000Hz)

b. Adjust the signal generator for an output of 150Hz at 300 millivolts. This will apply a signal to the Caramate Stop Cue Circuit of 150Hz at approximately 300 Microvolts.

c. Connect an AC VTVM or an Oscilloscope between ground and the output of the 150Hz filter circuit by referring to the chart below for the specific model involved.

Circuit	Test Point	
	3330	3350
Ground	72	2
150Hz Filter Output	71	27

d. Operate the "ON/OFF" Switch (S-4) on the front of the projector to "ON".

e. Adjust the sensitivity Potentiometer for a minimum reading on the VTVM or Oscilloscope. (The chart below is a breakdown of the correct Potentiometers to adjust the various Caramate 3300 Models).

Adjustment	Potentiometer	
	3330	3350
Sensitivity	VR 5	VR 6
Tuning	VR 6	VR 7

f. Adjust the tuning Potentiometer for a maximum reading on the VTVM or Oscilloscope.

g. Adjust the sensitivity Potentiometer for a reading of 4 volts RMS (12 volts peak-to-peak) on the VTVM or Oscilloscope.

h. Operate the "ON/OFF" switch to "OFF". Remove the test equipment connected in step (a) and replace the cue channel input connector removed in step (a).

j. Perform Step Level Evaluation Tests, Section A.6.

3. AUDIO TESTS AND REQUIREMENTS

a. Connect A voltage dividing network of 220,000ohms and 220ohms across the output of a signal generator.

b. Disconnect the audio channel input connector (J1 on all models)

c. Connect the output from the 220ohm portion of the above voltage divider to the circuit board according to the diagram below.

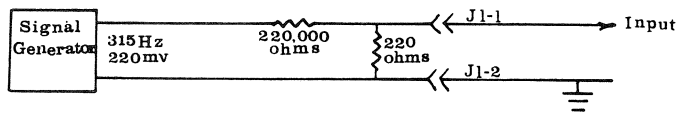

d. Adjust the signal generator for an output of 315Hz at 220 millivolts. This will apply a signal to the Caramate Audio Circuit of 315Hz at 220 microvolts.

e. Connect an AC VTVM or Oscilloscope to the tip and sleeve connections of the speaker jack (J14).

Note: A test speaker or dummy 8ohm load may be plugged into the speaker jack (J-14) for this test.

f. Operate the "ON/OFF" switch (S-4) on the front of the projector to "ON". (Record models must be in the PLAY-BACK Mode.)

g. Adjust the volume control for 6.2 volts RMS (17 volts peak-to-peak) on the VTVM or Oscilloscope. Only slight distortion should be evident in an Oscilloscope pattern. (maximum distortion 5%).

h. Operate the "ON/OFF" switch to "OFF".

j. Remove all test equipment and replace the connector removed in Step (b).

k. Proceed to Operational Tests, Section A.1. Azimuth Adjustment.

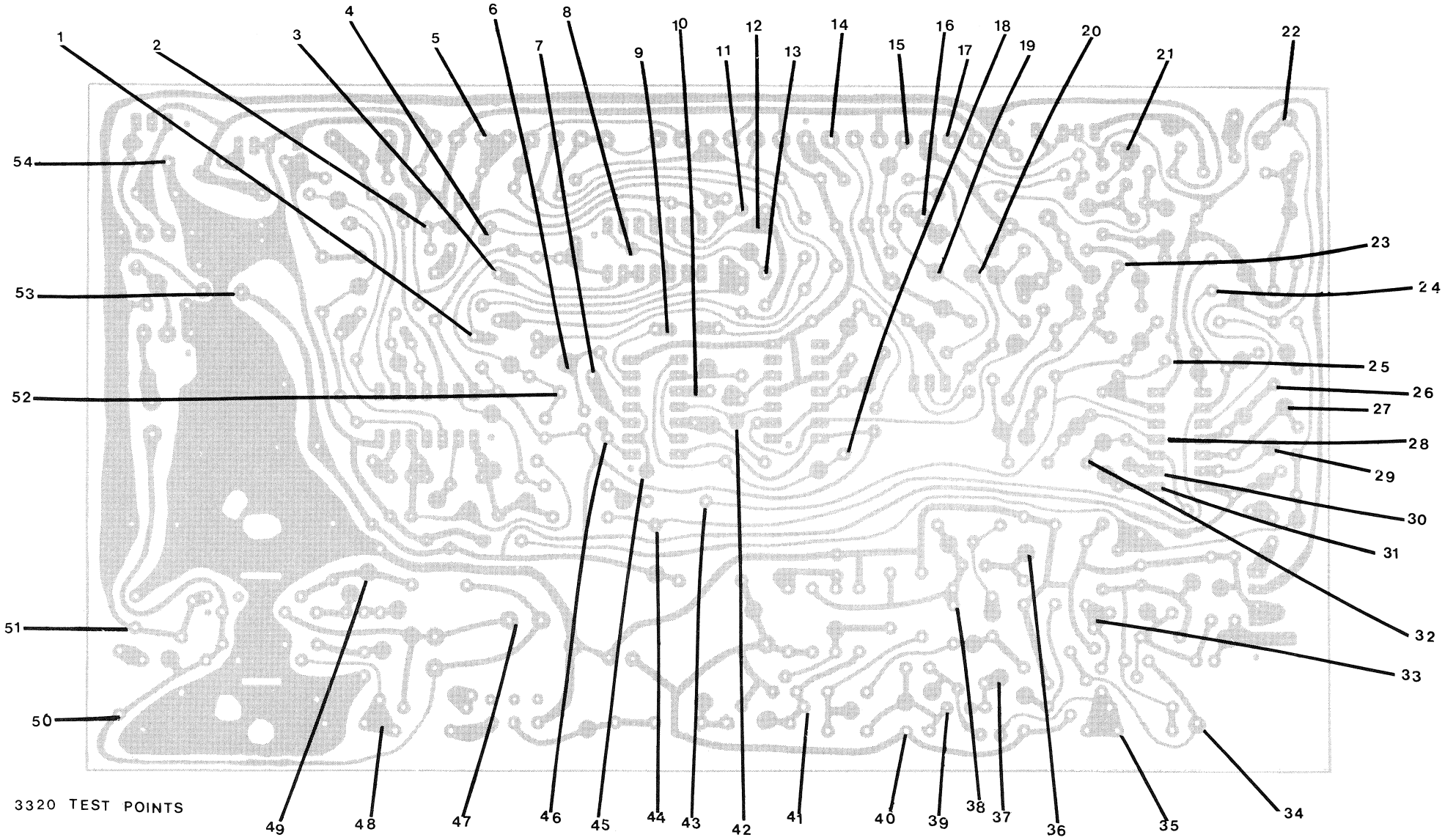

TEST POINTS 3320

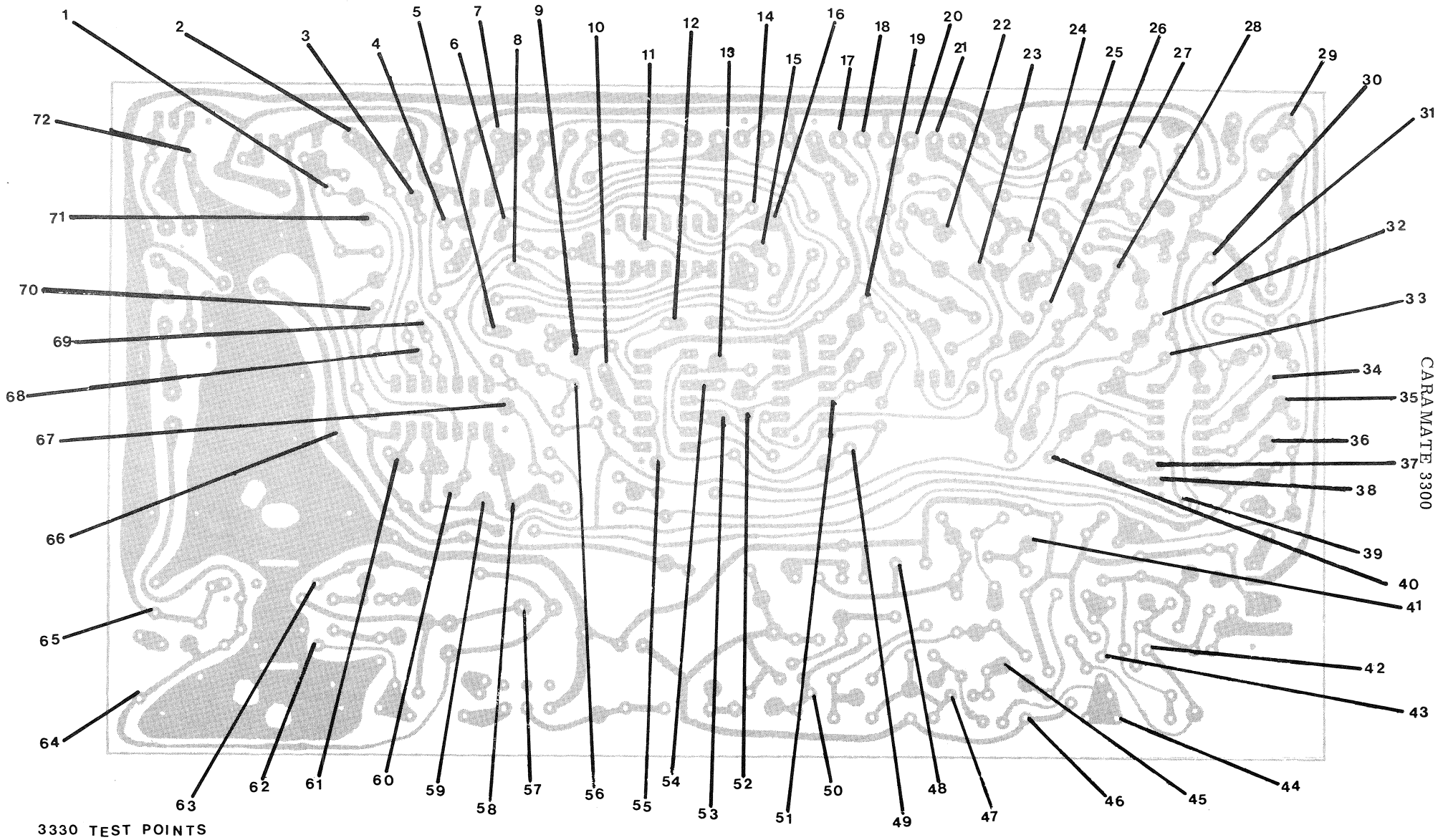

CARAMATE 3300

TEST POINTS 3330

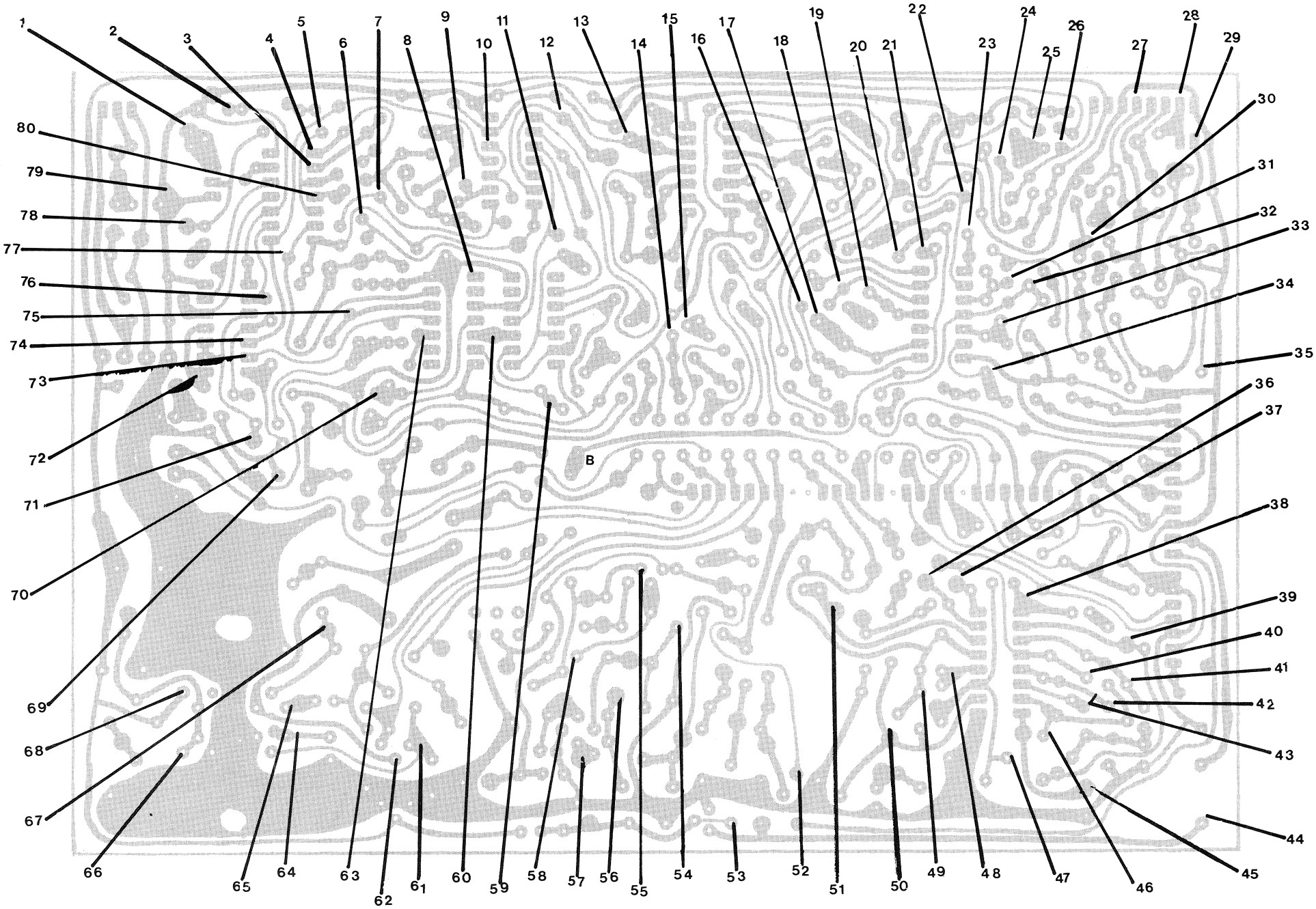

3340 TEST POINTS

TEST POINTS 3340

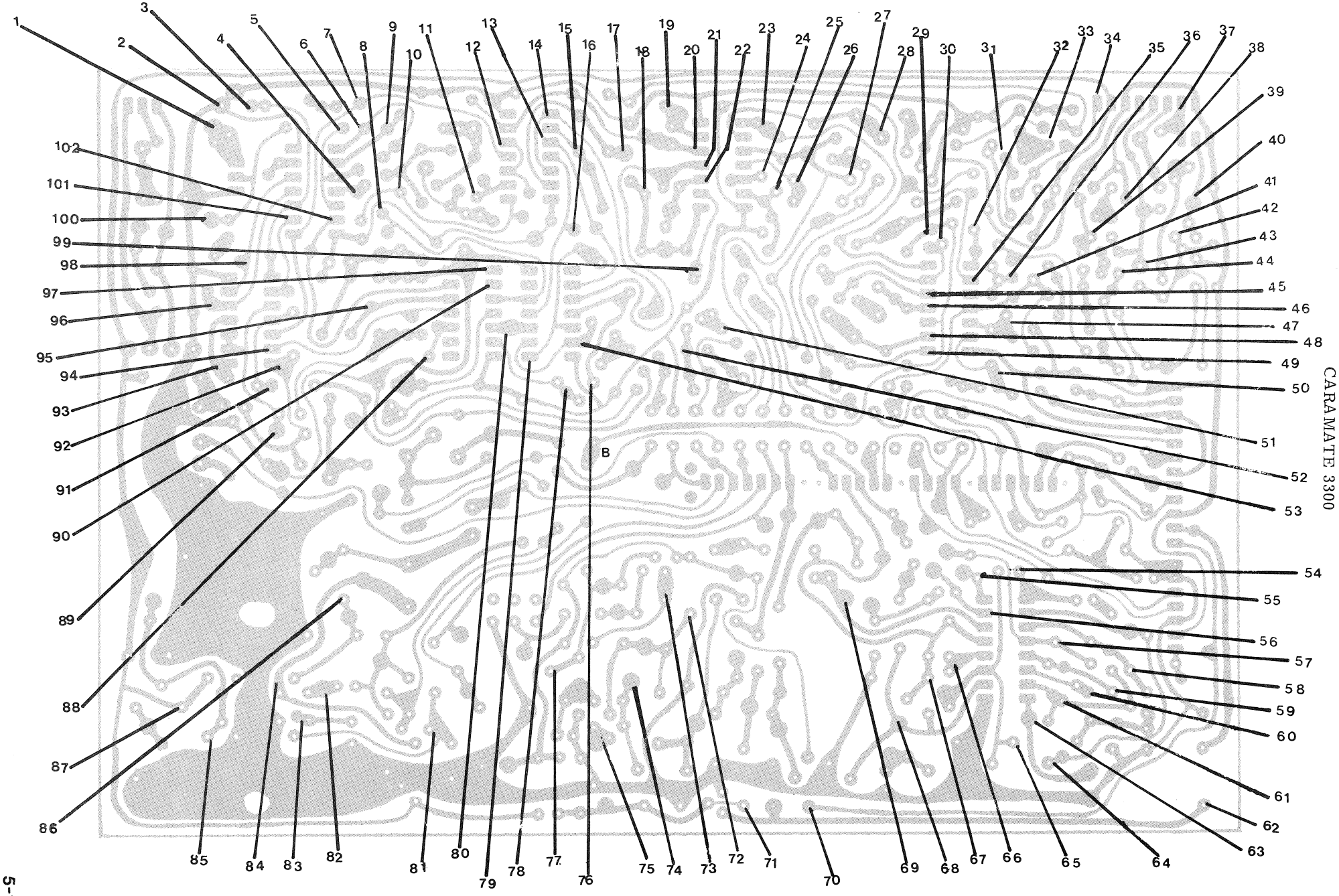

TEST POINTS 3350

CARAMATE 3300

SECTION VI TROUBLESHOOTING

SECTION VI. TROUBLESHOOTING

Before troubleshooting the CARAMATE 3300 PROJECTOR, make sure the following conditions exist.

1. The tape deck will transport a general purpose cassette without binding or damaging tape. (This will insure against damaging an expensive test tape).
2. The tape head is clean and demagnetized.
3. The azimuth adjustment is correct.
4. The tape contains the proper cue pulse frequencies.
5. There are no loose or missing screws or parts that are binding because of misalignment or lack of lubrication.
6. Evaluation tape SS345A has been played to determine the approximate operating condition of the machine (see description of test tape, Section V, Para. A, 6.)

When all of the above conditions are verified and the machine still exhibits trouble, consult the following.

A. TROUBLE AND REMEDY CHARTS

The purpose of the following table is to list commonly encountered troubles and to indicate corrective repairs and adjustments. Disassemble only as far as needed for repair. Electrical troubleshooting will be facilitated by referring to the Troubleshooting Aid Charts and the Wiring and Schematic diagrams.

The table is divided into Two Sections. Section One covers Projector Electrical Problems, while Section Two covers Projector Mechanical Problems. The schematic diagram indicates typical AC signal and DC bias voltages for cases requiring more extensive circuit analysis.

TROUBLE	PROBABLE CAUSE	REMEDY
1. PROJECTOR, ELECTRICAL		
a. All functions inoperative	Circuit breaker shut off or tripped (Line fuse blown)	Turn circuit breaker on (Replace line fuse)
	Power switch defective	Replace
	Power cord defective	Replace
	Connector loose or disconnected	Reconnect
	Thermal cutoff, in fan motor or lamp housing defective	Replace
	Thermal cutoff open due to overheating	Check operation of fan motor, Check for air flow obstruction, Check for high line voltage.
b. Lamp does not light	Defective lamp	Replace
	Defective lamp switch	Replace
	Connector loose or disconnected	Reconnect
c. No audio, all other functions O.K.	Defective board component	Insert 315 Hz Test Signal (From Test Tapes or Signal Generator) Trace signal with Oscilloscope or VTVM. Replace defective component.

TROUBLE	PROBABLE CAUSE	REMEDY
c. No audio, all other functions O.K.	Defective speaker	Replace
d. No audio, no advance or stop. Lamp and blower O.K.	Azimuth out of adjustment	Adjust (Refer to Section 5, A.1.)
	Tape head dirty	Clean
	Blown fuse in transformer	Replace
	Defective Cassette	Replace
e. Tape not being transported	Play switch (S-15) defective	Replace
	Defective board component	Replace
	Defective tape drive motor	Replace
	Defective cassette	Replace
	Loose or defective connector	Replace
	Defective tape head	Replace
f. Low audio output	Azimuth out of adjustment	Adjust (Refer to Section 5, Para. A.1.)
	Volume control dirty or defective	Clean or replace
	Defective board component	Insert 315 Hz Test Signal (from test tapes or signal generator) trace signal with oscilloscope or VTVM. Replace defective component.
	Defective tape head	Replace
g. No advance from cue pulses on tape, audio O.K.	Azimuth out of adjustment	Adjust (Refer to Section 5, Para. A.1.)
	Tape head dirty	Clean
	Defective board component	See Troubleshooting chart.
h. No tone control	Tone/Volume control plug reversed	Remove plug from board, turn plug around and plug back in.
	Azimuth out of adjustment	Adjust (Refer to Section 5, Para. A.1.)
	Defective tone control	Replace
j. Slide tray remains in select	Defective board component	Replace (Q-6), (Z-6)
	Mechanical bind in slide advance mechanism	Repair
k. Auto-Stop inoperative	Defective board component	Replace (Q-11), (Q-10) (Q-9), (D-12), (Q-7) or (SO-2)
m. Auto-Stop trips when tape stops with stop pulse or manual stop/reset button	Defective board component	Replace (Q-7), (D-10)

TROUBLE	PROBABLE CAUSE	REMEDY
n. No stop from cue pulse on tape, audio seems O.K.	Azimuth out of adjustment	Adjust (Refer to Section 5, Para. A.1).
	Tape head dirty	Clean
	Defective board component	See Troubleshooting chart
o. No record, playback O.K.	Record and/or mic switch out of adjustment	Adjust
	Defective contacts on record switch or mic switch	Clean contacts or replace switch
	Defective solder connection	Repair
	Defective microphone	Replace
	Breakout tabs out of Cassette	Use Cassette with breakout tabs intact
p. Noisy playback	Record & playback head dirty or scratched	Clean or replace
	Defective contacts on record switch or mic switch	Clean contacts or replace switch.
	Record & playback head connections open or intermittent	Repair
	Dirty volume control	Clean
2. PROJECTOR, MECHANICAL		
a. Screen illuminated when no slide is in projector	Shutter out of adjustment Shutter dirty	Adjust (Section 3, Para. J) Clean
b. Screen is not illuminated when slide is in projector, projection lamp O.K.	Shutter not opening	Check springs or operation interference.
c. Screen illumination weak or low	Projection lens, mirrors or projection screen dirty	Clean (Refer to Section 2, (Para. F.)
d. Projected image not centered on screen	Primary mirror out of adjustment	Adjust (Refer to Section 2, Para. A & B)
	Defective slide, not dropping	Remount slide
e. Projector does not cycle	Solenoid out of adjustment	Adjust (Refer to Section 3, Para. F)
	Clutch spring broken	Replace
	Slides jammed	Replace (Slide mounting)
	Side clamp interference at top of frame	Adjust (Refer to Section 3, Para. J.)
f. Slide tray will not rotate manually when select is depressed.	Lifter out of adjustment	Adjust (Refer to Section 3, Para. G.)

TROUBLE	PROBABLE CAUSES	REMEDY
g. Slide tray will not advance	Index arm jammed	Adjust forward or reverse cam Refer to (Section 3, Para E)
	Tray defective	Replace
	Defective board component	Refer to Troubleshooting charts
h. Magna-Frame binds or will not shift	Mechanical interference or disconnected	Repair
j. Projector continues to cycle	Solenoid misaligned	Adjust (Refer to Section 3, Para. 3)
k. Wow or flutter	Cassette defective	Test with another cassette. Replace if necessary
	Pinch roller surfaces dirty	Clean
	Flywheel or pinch roller bearings dirty	Clean
	Dirty capstan, rotates slowly	Clean
	Pinch roller spring defective	Replace
	Drive rollers worn or nicked	Replace
	Drive belt loose or worn	Replace
m. Cassette tape damaged by unit	Take-up torque low	Replace tape deck assembly
	Rollers gummy or dirty	Clean

B. TROUBLESHOOTING AID CHARTS

The Troubleshooting Aid Charts are included as a logical approach to a Troubleshooting procedure. They are by no means the final word on how troubles should be traced, but they are designed to eliminate as much duplication of effort as possible. Simply follow the direction of the arrow describing the condition existing during any given test. Suggested component replacement represents components most likely to fail. If following arrows results in a closed loop, then a trouble most likely exists in that circuit and further testing of other components in that circuit is recommended.

1. Remove the tape deck side panel by removing the seven screws which hold the back panel in place, removing the back panel and sliding the side panel toward the rear of the projector and tipping it out at the top. (See Section 3, Para A.)

2. Make sure all plugs and connectors are making good contact.

3. Verify that all DC supply voltages are correct on the circuit board. Refer to test point charts (Section 5, Para B. 3).

Models	Test Points				
	Ground	+20 volts	+15 volts	+14 volts	+13 volts
3320	54	51	53		40
3330	72	65	66		46
3340	79	68	69	52	
3350	2	87	92	70	

EXAMPLE

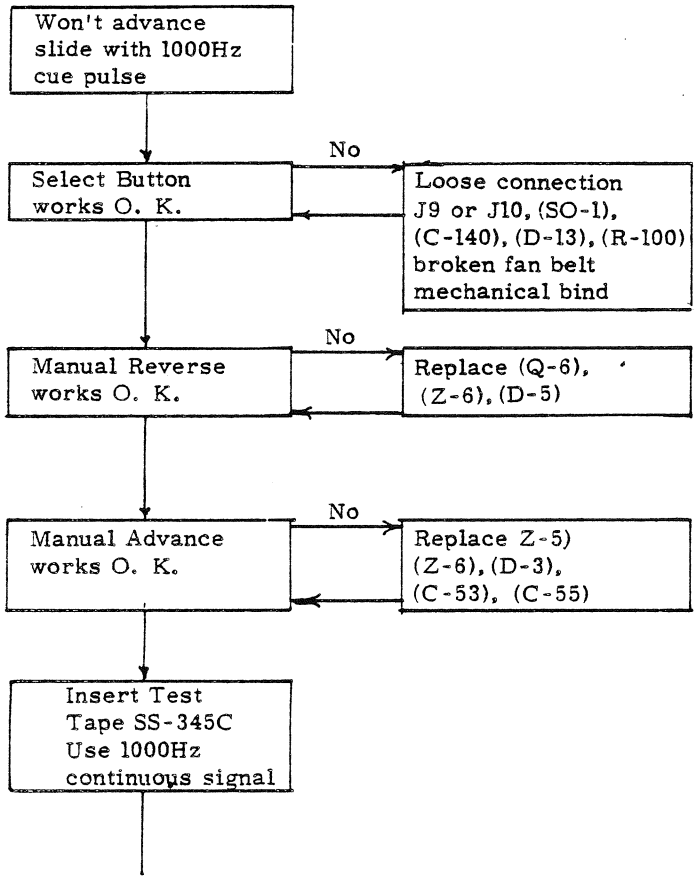

Test	Condition	Action Required
Select Button Works O.K.	No	Check for Loose Connectors, Broken Belt, Mechanical bind or component failure
Select Button Works O.K.	Yes	Go on to manual Reverse works O.K.
Manual Reverse Works O.K.	No	Replace one at a time (Q-6) (Z-6), D-5)
Manual reverse works O. K.	No	Continue testing in manual reverse circuit

Consulting the trouble and remedy chart will also assist in locating troubles.

3320 Troubleshooting Aid Chart

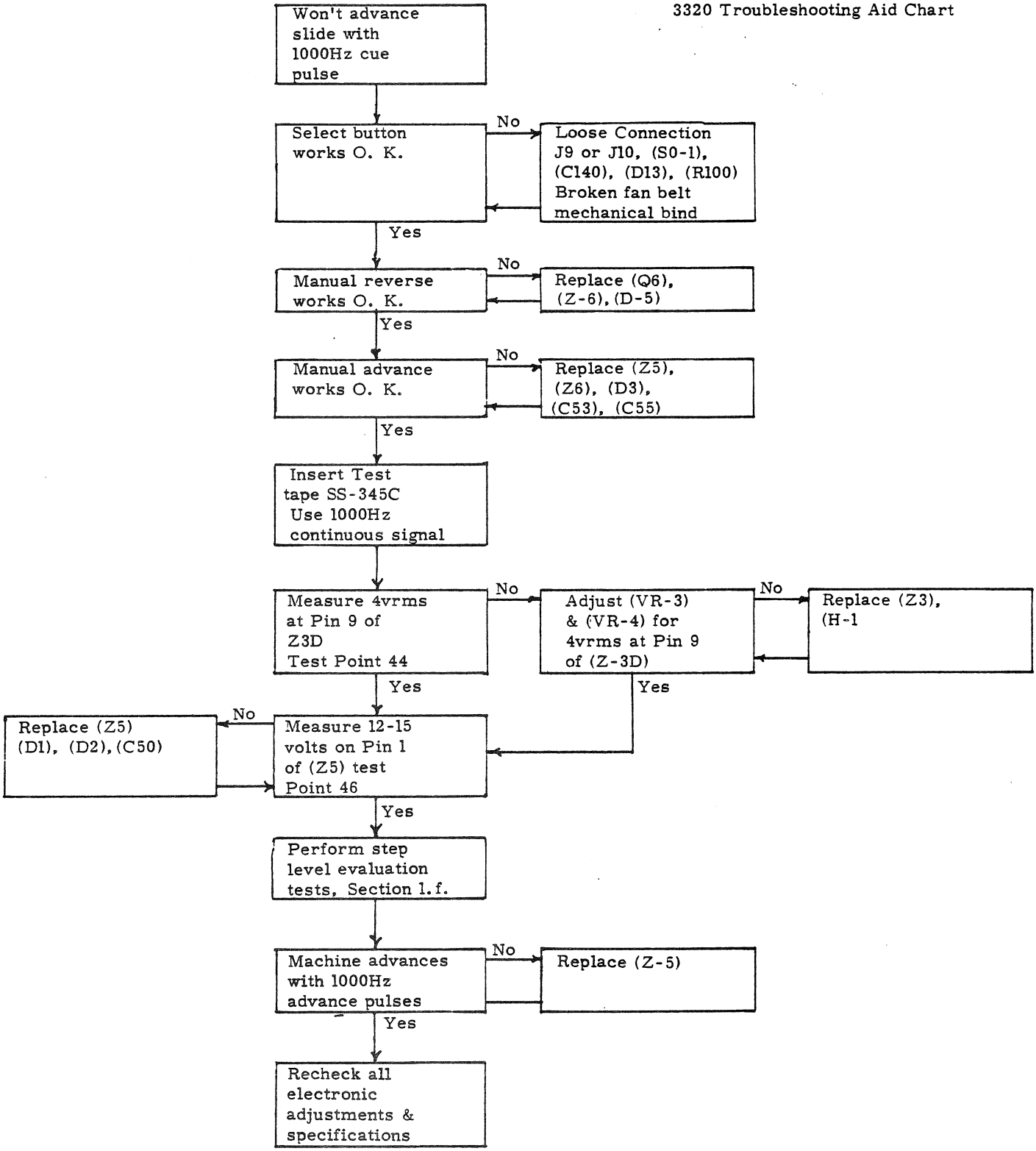

3330 Troubleshooting Aid Chart

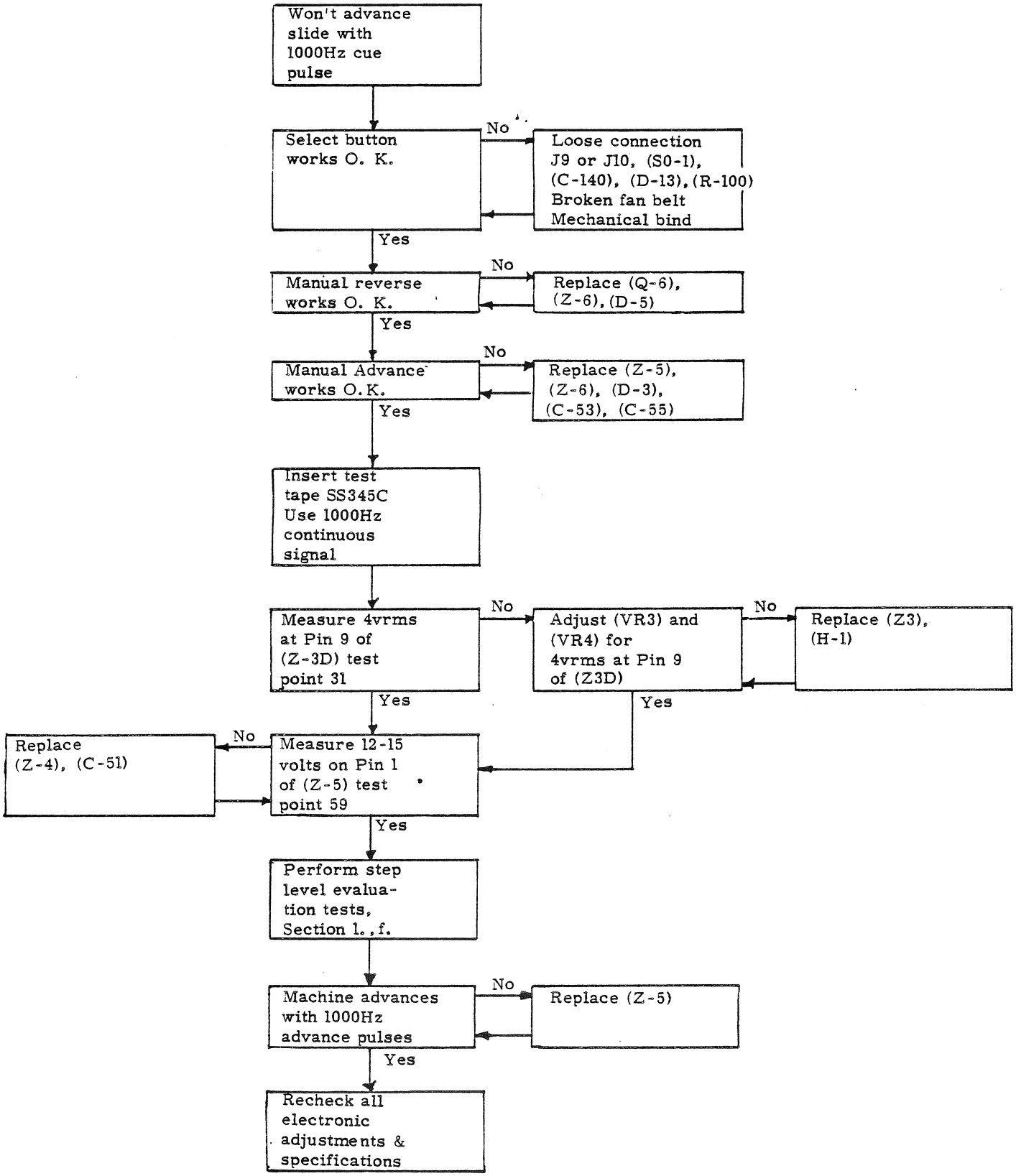

3330 Troubleshooting Aid Chart

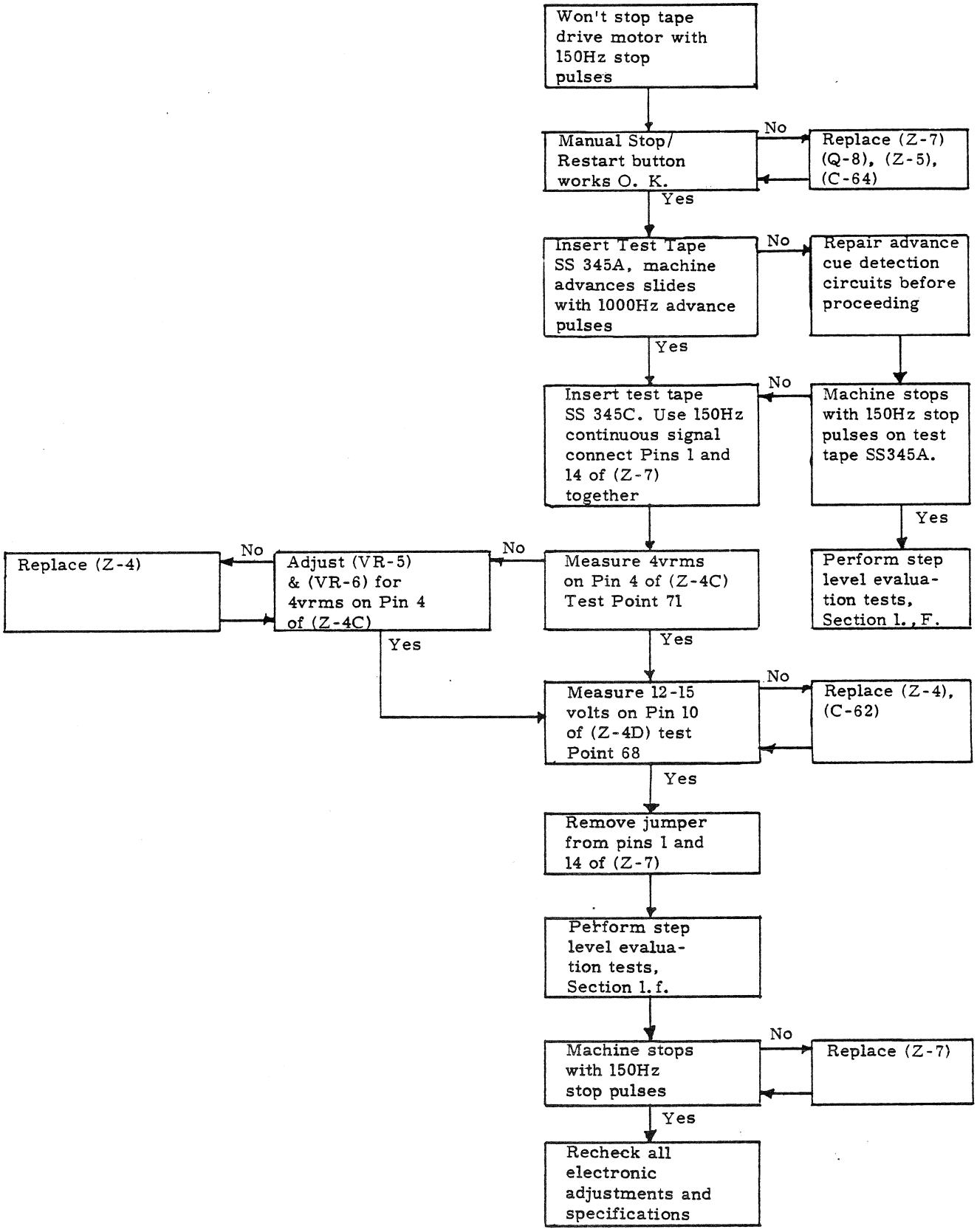

3340 Troubleshooting Aid Chart

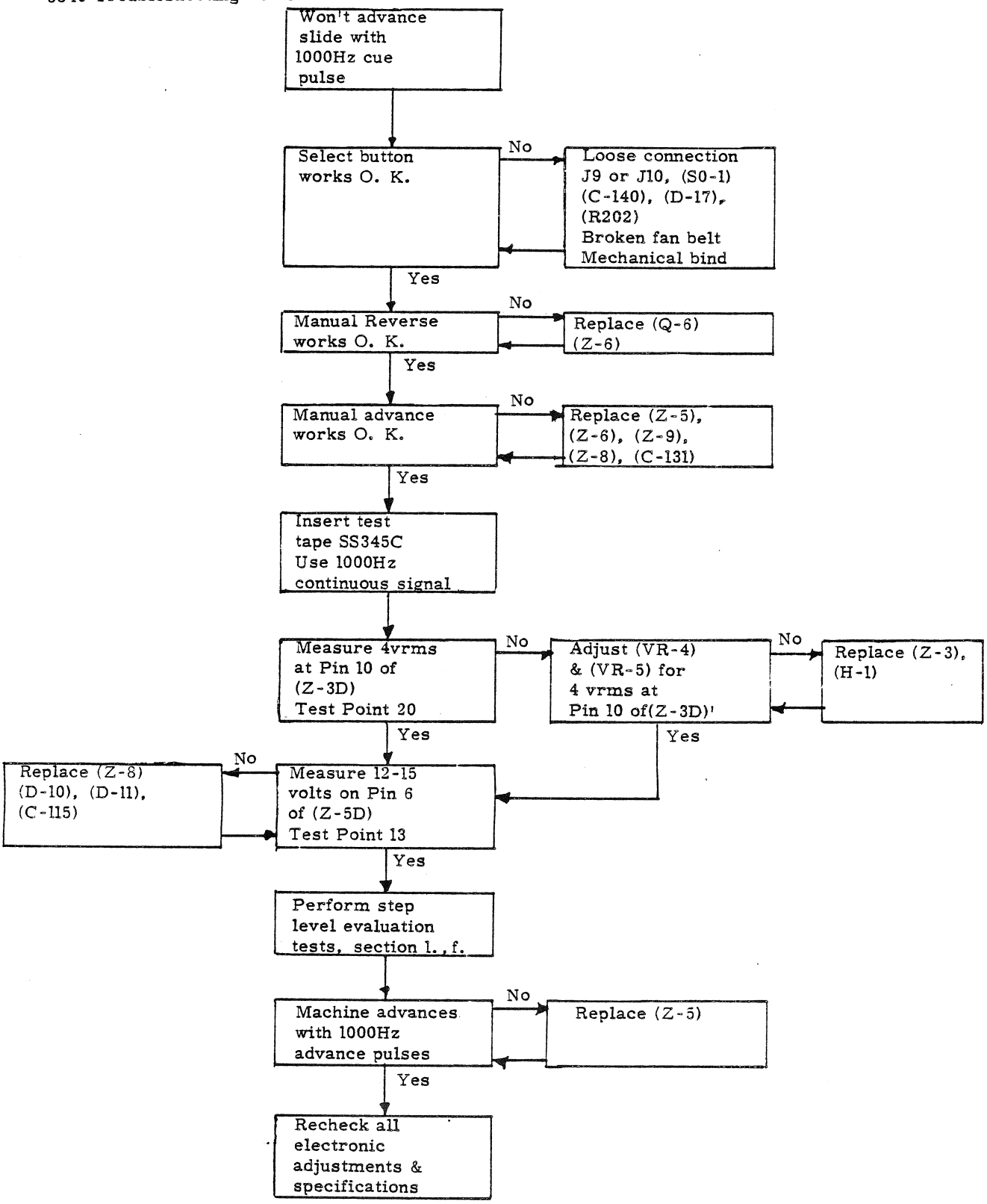

3350 Troubleshooting Aid Chart

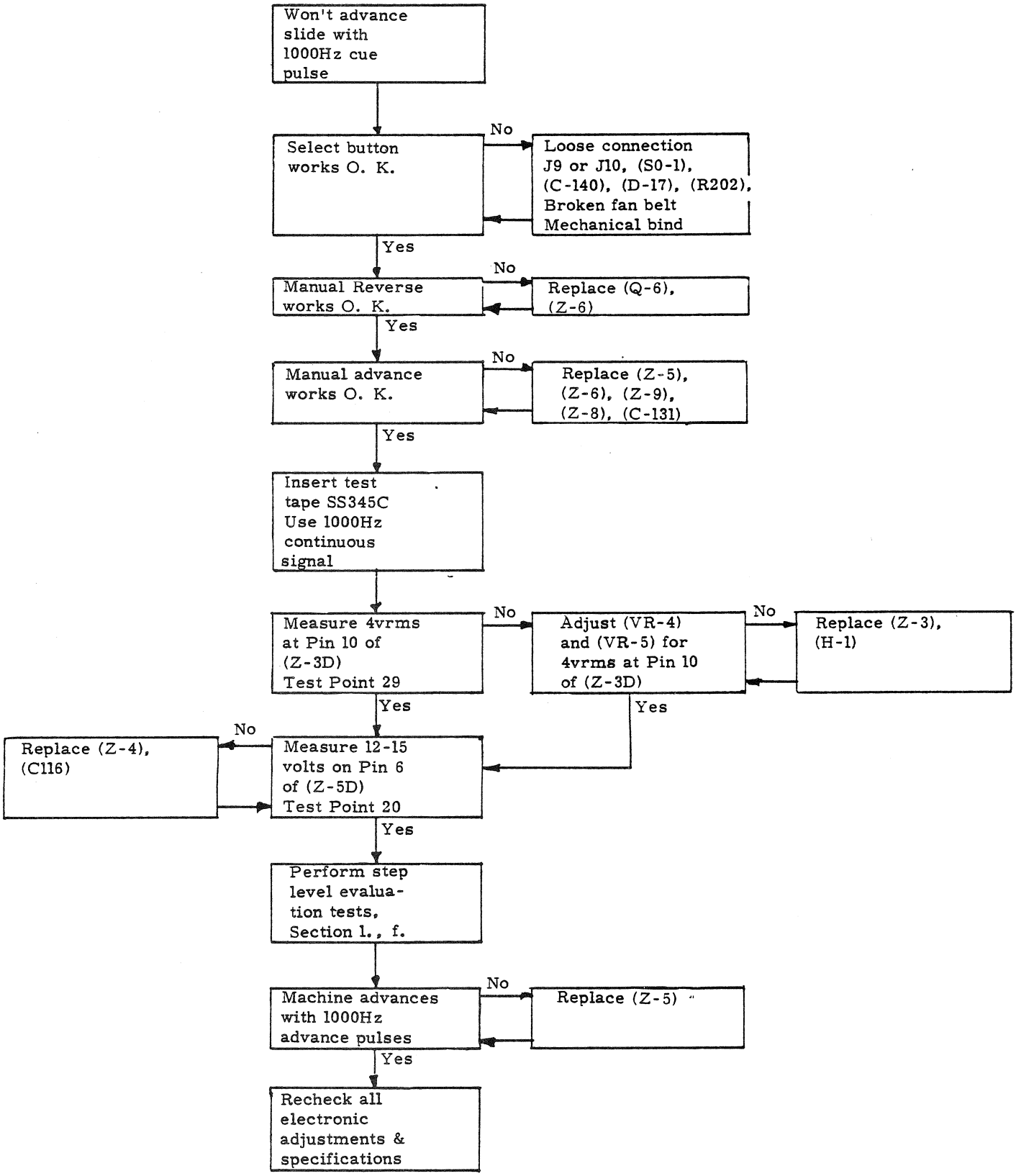

3350 Troubleshooting Aid Chart

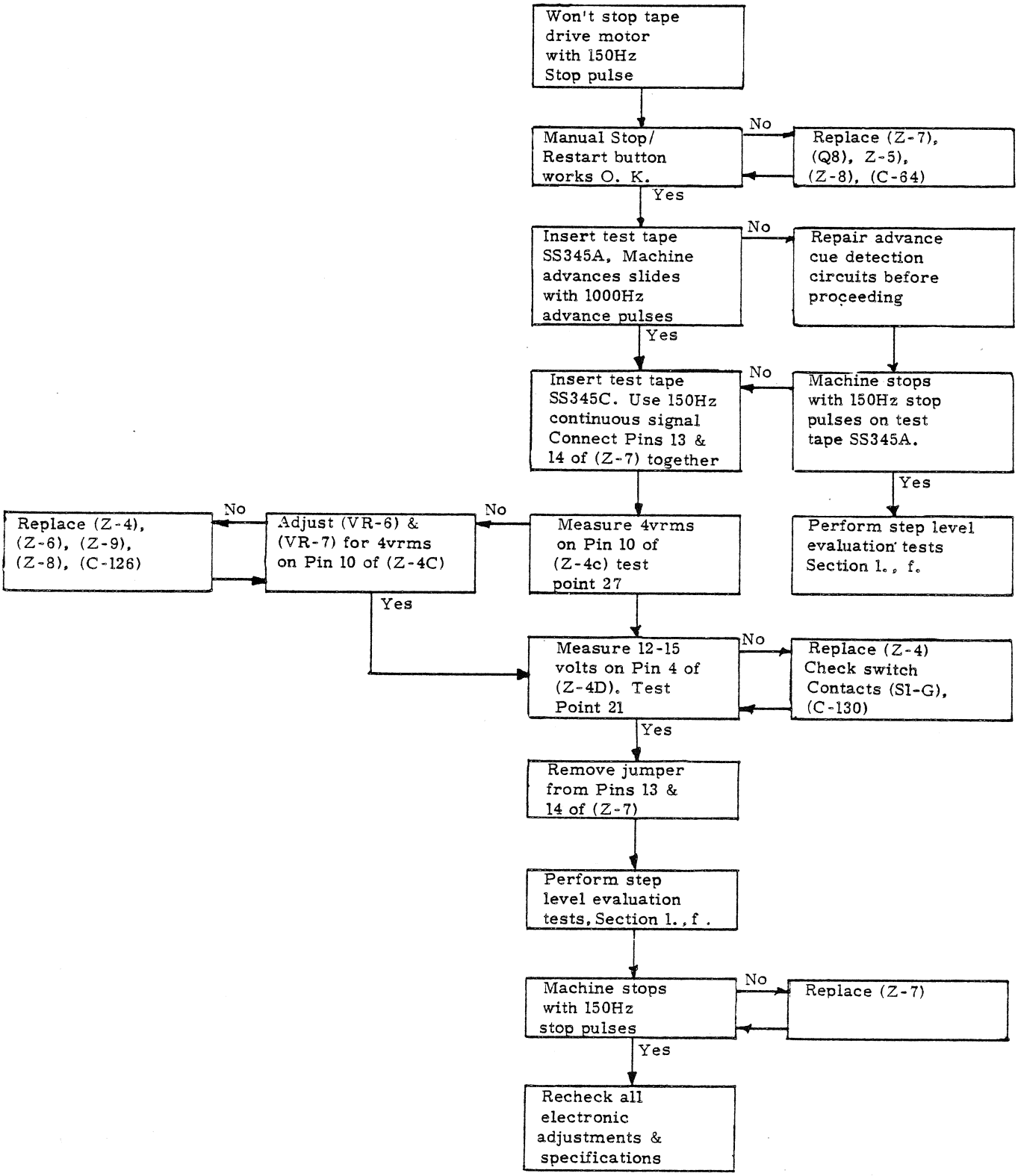

PARTS MANUAL

CARAMATE SERIES 3300 PROJECTORS

TELEX®

TELEX COMMUNICATIONS, INC.

9600 Aldrich Ave. So., Minneapolis, MN 55420 U.S.A.

VOLUME 3300B

Litho in U.S.A.

November, 1985

ILLUSTRATED PARTS LIST INTRODUCTION

To aid in the repair and replacement of component parts, breakdown of assemblies and subassemblies are arranged in disassembly order. The relationship of the assemblies, subassemblies and detail parts is shown by indent. All parts common to a given assembly, or subassembly, are indented one space and listed directly under the item.

The column titled "Figure and Index No." contains the index number in disassembly order of the items illustrated. Do not use the figure or index number in correspondence - - Specify the Catalog or Part Number and Name.

The column entitled "Description" lists item nomenclature on the drawing. The code "AR" will indicate the quantity is "as required" to meet dimensional or performance characteristics. The code "NHA" will indicate a part is not available; procure "Next Higher Assembly". The code "LP" indicates "Local Purchase".

Catalog #	Description
3350	Projector Complete, 120V, 60 Hz. P/R-SP
3330	Projector Complete, 120V, 60 Hz. P- SP
3340	Projector Complete, 120V 60 Hz. P/R
3320	Projector Complete, 120V 60 Hz. P
3354	Projector Complete, 220V, 50 Hz. P/R-SP
3334	Projector Complete, 220V, 50 Hz. P-SP
3344	Projector Complete, 220V, 50 Hz. P/R
3324	Projector Complete, 220V, 50 Hz. P
3356J	Projector Complete, 100V, 50 Hz. P/R-SP
3336J	Projector Complete, 100V, 50 Hz, P-SP
3346J	Projector Complete, 100V, 50 Hz, P/R
3326J	Projector Complete, 100V, 50 Hz, P
3395	Remote Control (SP)
3392	Remote Control

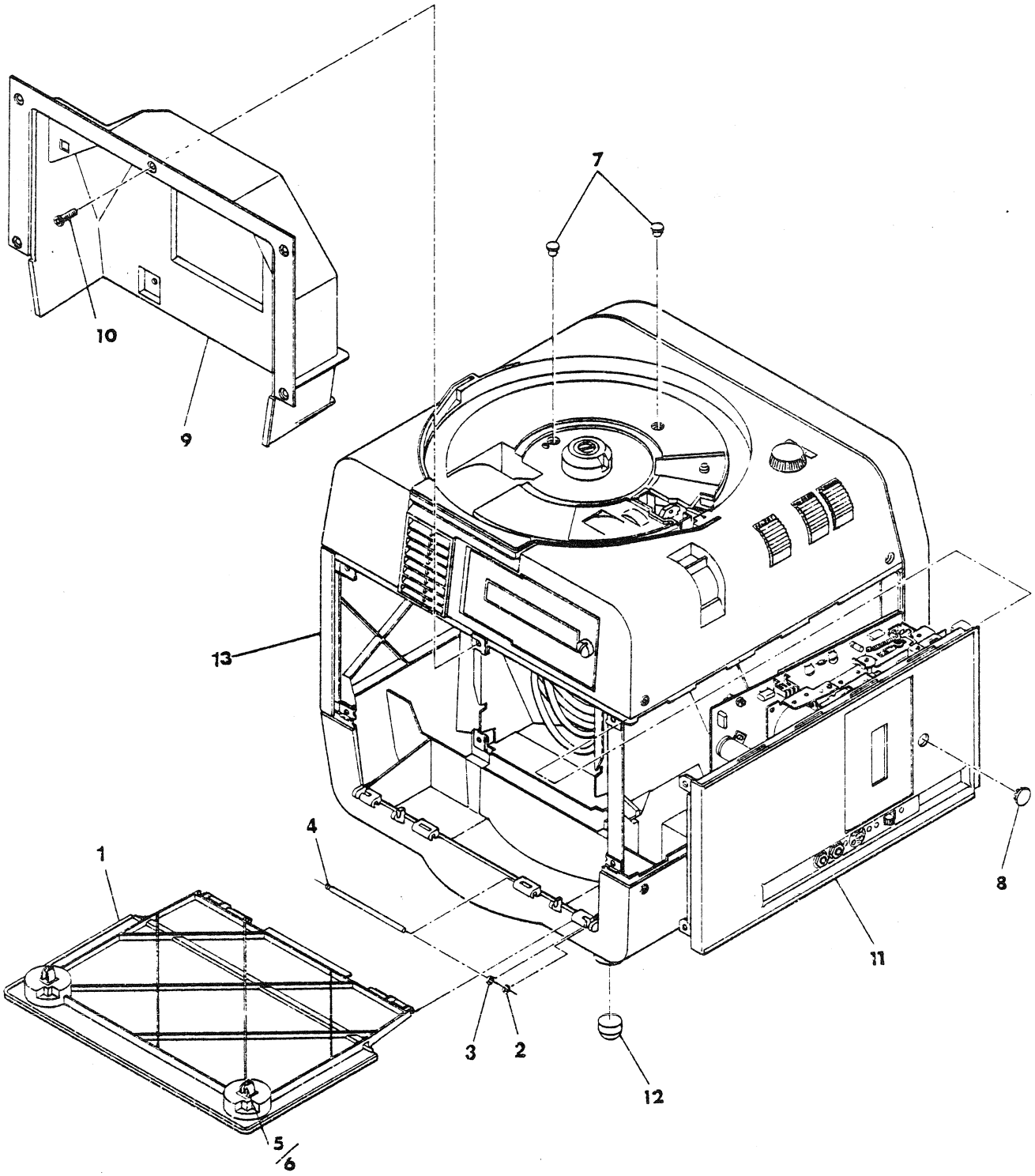

Figure 1. PROJECTOR COMPLETE

FIG. & INDEX NO.	PART NUMBER	DESCRIPTION	Rev	QTY	MODELS USED ON
1-	45300-G1	PROJECTOR COMPLETE (P/R) SP	M	REF	3350
	45300-G2	PROJECTOR COMPLETE (P) SP	M	REF	3330
	45300-G3	PROJECTOR COMPLETE (P/R)	M	REF	3340
	45300-G4	PROJECTOR COMPLETE (P)	M	REF	3320
	45670-G1	PROJECTOR COMPLETE (P/R) SP (INT)	D	REF	3354
	45670-G2	PROJECTOR COMPLETE (P) SP (INT)	D	REF	3334
	45670-G3	PROJECTOR COMPLETE (P/R) INT	D	REF	3344
	45670-G4	PROJECTOR COMPLETE (P) INT	D	REF	3324
	46130-G1	PROJECTOR COMPLETE (P/R) SP (Japan)	F	REF	3356J
	46130-G2	PROJECTOR COMPLETE (P) SP (Japan)	F	REF	3336J
	46130-G3	PROJECTOR COMPLETE (P/R) Japan	F	REF	3346J
	46130-G4	PROJECTOR COMPLETE (P) Japan	F	REF	3326J
-1*	45628-G1	. DOOR ASSEMBLY		1	All
**	45521-P2	. DOOR		1	All
		ATTACHING PARTS			
-2*	251-7-1	. RING, Retaining		1	All
-3**	38473-P1	. WASHER, Flat 0.250 x 0.128 x 0.101			
-4	45386-P1	. PIN, Hinge		2	All
		---***---			
-5	45627-P2	. LATCH		2	All
-6	45627-P3	. HANDLE		2	All
-7	245-11	. PLUG		2	All
-8	42677-P4	. PLUG		1	All
-9	45520-P1	. PANEL, Back		1	3350, 3330, 3340, 3320
	45520-P4	. PANEL, Back		1	3354, 3334, 3344, 3324
	45520-P5	. PANEL, Back		1	3356J, 3336J, 3346J, 3326J
		ATTACHING PARTS			
-10	40921-P12L	. SCREW, Self Threading No. 8 x 5/8 Pan hd		7	All
		---***---			
-11		. PANEL COMPLETE, Left (Figure 3)		REF	All
-12	45053-P1	. FOOT		2	All
-13		. PROJECTOR ASSEMBLY (Figure 2)		REF	All
	46156-G1	. MICROPHONE SET		1	3350, 3340, 3354, 3344, 3356J, 3346J
	SK-2721-P2	. SHIELD, Tray (used on projectors Prior to code C-9)			

NOTE * Used on projectors Prior to Code EOW

** Used on projectors Starting Code EOW

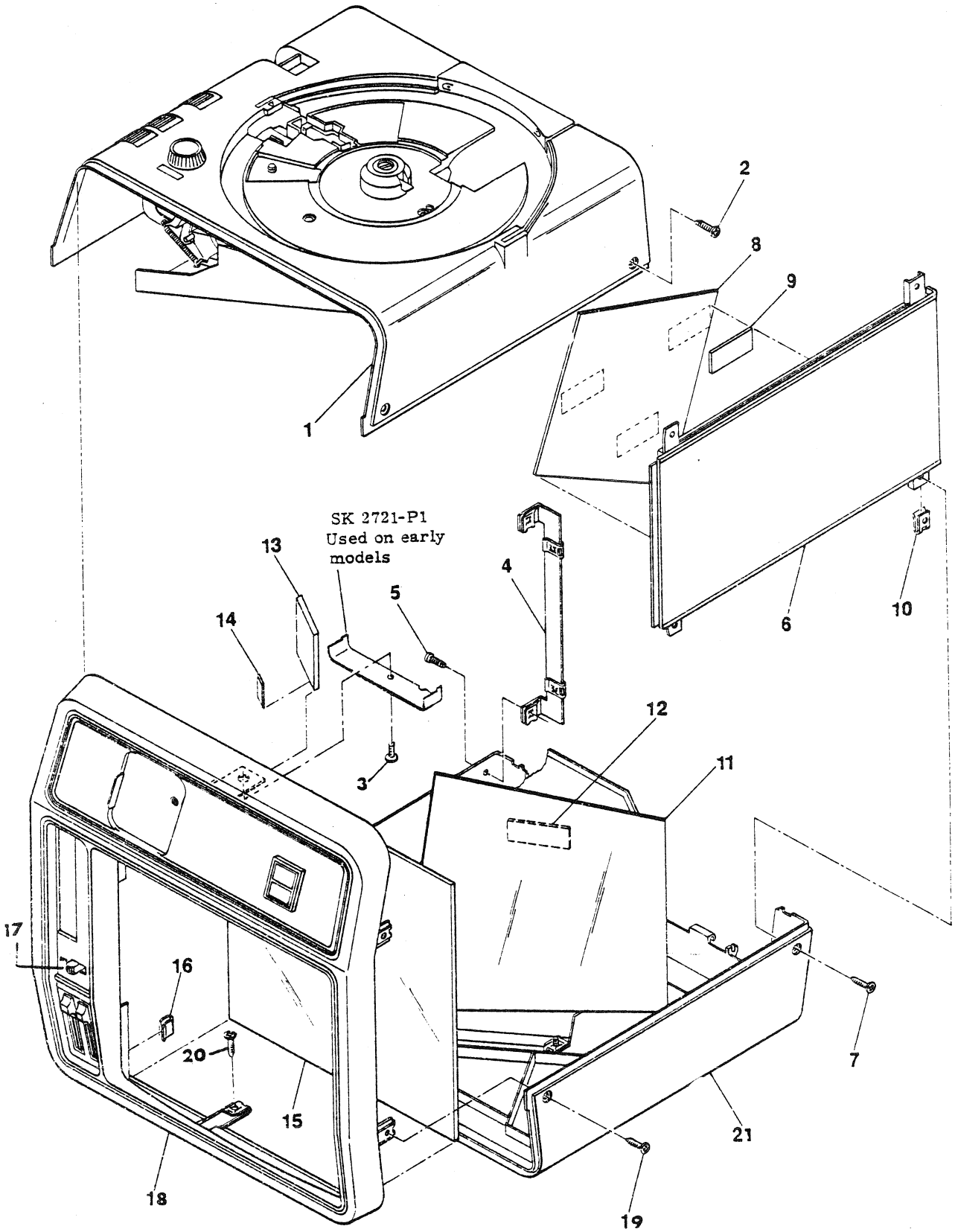

Figure 2. PROJECTOR ASSEMBLY

FIG. & INDEX NO.	PART NUMBER	DESCRIPTION	Rev	QTY	MODELS USED ON
2-	45301-G1	PROJECTOR ASSEMBLY (P/R) SP	S	REF	3350
	45301-G2	PROJECTOR ASSEMBLY (P) SP	S	REF	3330
	45301-G3	PROJECTOR ASSEMBLY (P/R)	S	REF	3340
	45301-G4	PROJECTOR ASSEMBLY (P)	S	REF	3320
	45671-G1	PROJECTOR ASSEMBLY (P/R) SP (INT)	K	REF	3354
	45671-G2	PROJECTOR ASSEMBLY (P) SP (INT)	K	REF	3334
	45671-G3	PROJECTOR ASSEMBLY (P/R) INT.	K	REF	3344
	45671-G4	PROJECTOR ASSEMBLY (P) INT	K	REF	3324
	46131-G1	PROJECTOR ASSEMBLY (P/R) SP (Japan)	J	REF	3356J
	46131-G2	PROJECTOR ASSEMBLY (P) SP (Japan)	J	REF	3336J
	46131-G3	PROJECTOR ASSEMBLY (P/R) Japan	J	REF	3346J
	46131-G4	PROJECTOR ASSEMBLY (P) Japan	J	REF	3326J
-1		. HOUSING COMPLETE, Upper (Figure 4)		REF	All
		ATTACHING PARTS			
-2	121-8R-8L	. SCREW, Self Threading No.8 x 1/2 Pan hd		4	All
-3	116-8R-4L	. SCREW, Machine 8/32 x 1/4 Pan hd		1	All
		---***---			
-4	45478-G1	. STRAP ASSEMBLY (p/o Item 21)		1	All
		ATTACHING PARTS			
-5	121-8R-8L	. SCREW, Self Threading No.8 x 1/2 Pan hd		1	All
		---***---			
-6	45463-G3	. PANEL ASSEMBLY, Right		1	All
		ATTACHING PARTS			
-7	121-8R-8L	. SCREW, Self Threadin g No.8 x 1/2 Pan hd		1	All
		---***---			
-8	45477-P1	. . MIRROR		1	All
-9	46464-P1	. . TAPE (4416 3M Co). 9 yd roll		AR	All
-10	45476-P1	. . NUT, Spring		4	All
-11	45480-P1	. MIRROR, Final		1	All
		ATTACHING PARTS			
-12		. TAPE (4416 3M Co, 9 yd roll)		LP	All
		---***---			
-13	45498-P1	. MIRROR, First		1	All
		ATTACHING PARTS			
-14	46464-P1	. TAPE (4416 3M Co 9 yd roll)		AR	All
		---***---			
-15	43846-P1	. SCREEN, Viewing		1	All
		ATTACHING PARTS			
-16	43847-P1	. CLIP		8	All
		---***---			
-17 *	46141-P1	. SWITCH (Rocker Type)		1	3350, 3330, 3340, 3320
	45679-P1	. SWITCH (Rocker Type)		1	3354, 3334, 3344, 3324, 3356J, 3336J, 3346J, 3326J
-18		. BEZEL COMPLETE (Figure 5)		REF	All
		ATTACHING PARTS			
-19	121-8R-8L	. SCREW, Self Threading No.8 x 1/2 Pan hd		2	All
-20	121-8R-8K	. SCREW, Thread Forming No.8 x 1/2 Pan hd		1	All
		---***---			
-21		. HOUSING, Lower (Figure 6)		REF	All

* NOTE: Switch (45389-P1) Slide Type used on Early Models.

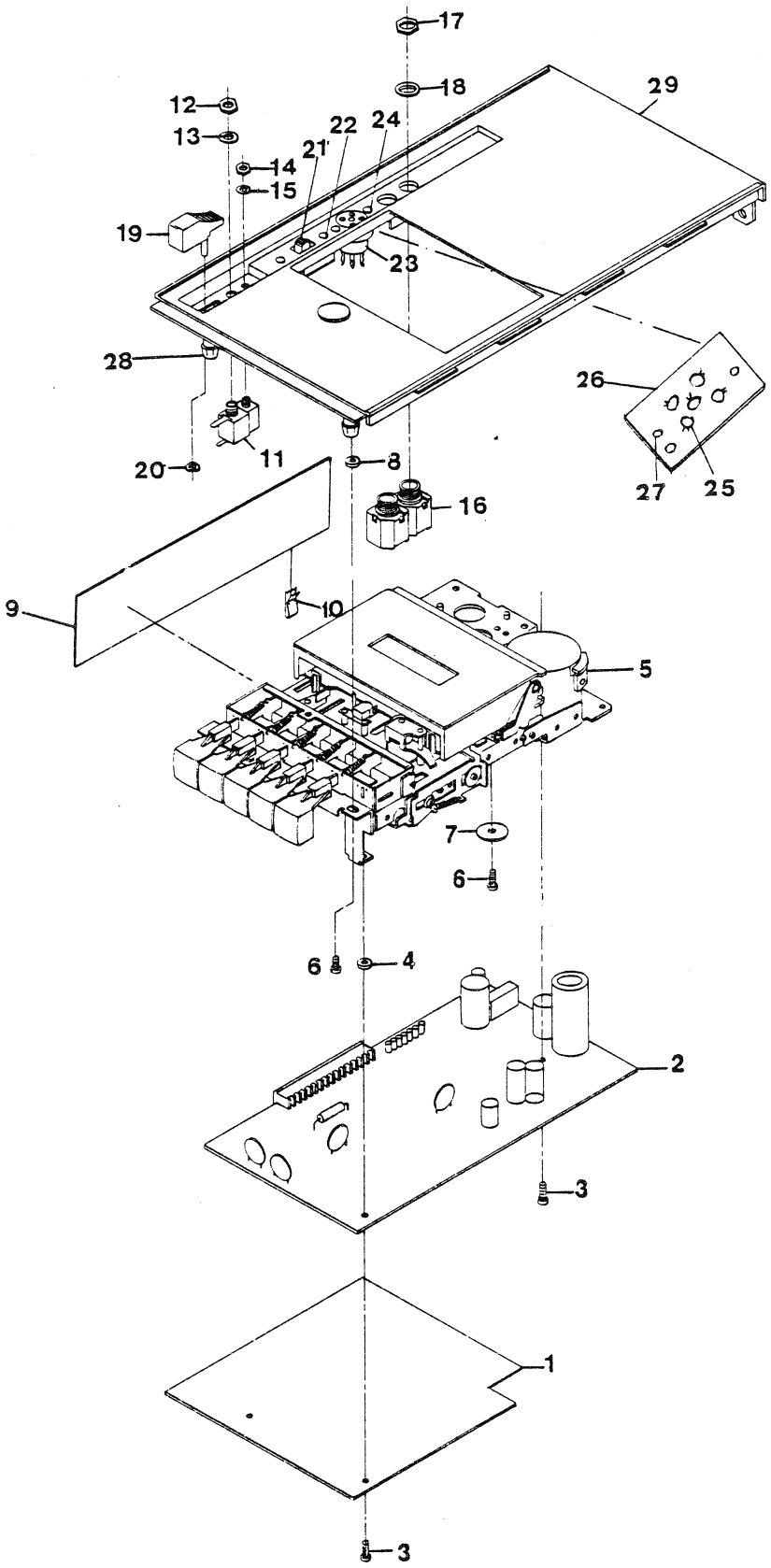

Figure 3. LEFT PANEL COMPLETE

FIG. & INDEX NO.	PART NUMBER	DESCRIPTION Rev. V	QTY	MODELS USED ON
		(Referenced from 9, Figure 1)		
3-	45501-G1	PANEL COMPLETE, Left (P/R) SP.	REF	3350, 3354, 3356J
	45501-G2	PANEL COMPLETE, Left (P) SP.	REF	3330, 3334, 3336J
	45501-G3	PANEL COMPLETE, Left (P/R)	REF	3340, 3344, 3346J
	45501-G4	PANEL COMPLETE, Left (P).	REF	3320, 3324, 3326J
-1	45517-P2	. BAFFLE	1	3350, 3354, 3356J, 3340 3344, 3346J
	45517-P3	. BAFFLE	1	3330, 3334, 3336J, 3320 3324, 3326J
-2		. BOARD, Circuit(Figure 17) Prior to Code J9K	1	3350, 3354, 3356J, 3340, 3344, 3346J
		. BOARD, Circuit(Figure 18) Prior to Code J7K	1	3330, 3334, 3336J, 3320 3324, 3326J
		. BOARD, Circuit(Figure 19) Starting Code J9K	1	3350, 3354, 3356J, 3340 3344, 3346J
		. BOARD, Circuit(Figure 20) Starting Code J9K	1	3340, 3344, 3346J, 3324 3326J
		ATTACHING PARTS		
-3	148-6-6L	. SCREW, Thread Forming No. 6 x 3/8 Hex hd	3	ALL
-4	43270-P6	. WASHER, Flat(Phenolic) 0.350 x 0.155 x 0.063	1	ALL
		--- *** ---		
-5		. TAPE DECK COMPLETE(Figure 7).	REF	ALL
		ATTACHING PARTS		
-6	121-8R-6H	. SCREW, Thread Forming No. 8 x 3/8 Pan hd	3	ALL
-7	43260-P23	. WASHER, Flat 0.750 x 0.173 x 0.042	1	ALL
-8	43270-P6	. WASHER, Flat(Phenolic) 0.350 x 0.155 x 0.063	2	3350, 3354, 3356J, 3340, 3344, 3346J
		--- *** ---		
-9	45602-P1	. BAFFLE	1	ALL
		ATTACHING PARTS		
-10	45115-P1	. CLIP	2	ALL
		--- *** ---		
-11	45612-G1	. JACK ASSEMBLY (Mic/Remote)	1	3350, 3354, 3356J
	45612-G2	. JACK ASSEMBLY (Mic/Remote)	1	3340, 3344, 3346J
		ATTACHING PARTS		
-12	43831-P3	. NUT	1	3350, 3354, 3356J, 3340 3344, 3346J
-13	43831-P4	. WASHER	1	3350, 3354, 3356J, 3340 3344, 3346J
-14	43832-P3	. NUT	1	3350, 3354, 3356J, 3340 3344, 3346J
-15	43832-P4	. WASHER	1	3350, 3354, 3356J, 3340 3344, 3346J
		--- *** ---		
	43832-P2	. . JACK, Remote	1	3350, 3354, 3356J, 3340 3344, 3346J
	43831-P2	. . JACK, Mic	1	3350, 3354, 3356J, 3340 3344, 3346J
-16	45610-G1	. JACK ASSEMBLY, Speaker & Ear	1	ALL
		ATTACHING PARTS		
-17	42563-P3	. NUT	2	ALL
-18	43270-P12	. WASHER	2	ALL
		--- *** ---		
	42563-P6	. . JACK	2	ALL
	45502-G1	. PANEL ASSEMBLY, Left Prior to 2/80.	1	3350, 3354, 3356J, 3344 3340, 3346J
	45502-G2	. PANEL ASSEMBLY, Left Prior to 2/80.	1	3350, 3334, 3336J, 3320 3324, 3326J
	45502-G3	. PANEL ASSEMBLY, Left(Starting 2/80).	1	3350, 3354, 3356J, 3340 3344, 3346J
	45502-G4	. PANEL ASSEMBLY, Left(Starting 2/80).	1	3320, 3324, 3326J, 3330 3334, 3336J

FIG. & INDEX NO.	PART NUMBER	DESCRIPTION Rev. V	QTY	MODELS USED ON
-19	45504-G1	. . KNOB ASSEMBLY	1	3350, 3354, 3356J, 3344 3340, 3346J
		ATTACHING PARTS		
-20	46161-P1	. . WASHER	1	3350, 3354, 3356J, 3340 3344, 3346J
		--- *** ---		
-21	45022-P1	. . SWITCH, Hi-Lo	1	ALL
		ATTACHING PARTS		
-22	175-6-16K	. . RIVET	2	ALL
		--- *** ---		
-23	45611-P1	. . RECEPTACLE Remote (Prior to 2/80)	1	ALL
		ATTACHING PARTS		
-24	175-6-10K	. . RIVET (Prior to 2/80)	2	ALL
		--- *** ---		
	45502-G5	. . PANEL, First (Starting 2/80)	1	3350, 3354, 3356J, 3340 3344, 3346J
	45502-G6	. . PANEL, First (Starting 2/80)	1	3330, 3334, 3336J, 3320 3324, 3326J
-25	45802-P1	. . . CONTACT (Starting 2/80)	5	ALL
-26	46717-P1	. . . PLATE (Starting 2/80)	1	ALL
		ATTACHING PARTS		
-27	45502-P22	. . . EYELET (Starting 2/80)	2	ALL
		--- *** ---		
-28	44932-P1	. . FASTENER	3	ALL
	183-6-16	. . GROOVE, Pin (not shown)	1	ALL
-29	45503-P5	. . PANEL (Prior to 2/80)	1	3350, 3354, 3356J, 3340 3344, 3346J
	45503-P4	. . PANEL (Prior to 2/80)	1	3330, 3334, 3336J, 3320 3324, 3326J
	45503-P9	. . . PANEL (Starting 2/80).	1	3350, 3354, 3356J, 3340 3344, 3346J
	45503-P8	. . . PANEL (Starting 2/80)	1	3330, 3334, 3356J, 3320 3324, 3326J
	45653-G1	CONNECTOR ASSEMBLY, Remote Control	1	3330, 3334, 3336J, 3320 3324, 3326J
	45616-G1	HOUSING ASSEMBLY, Remote Control.	1	3330, 3354, 3356J, 3340 3344, 3346J
	45615-G1	HOUSING ASSEMBLY, Hi-Lo Switching.	1	ALL

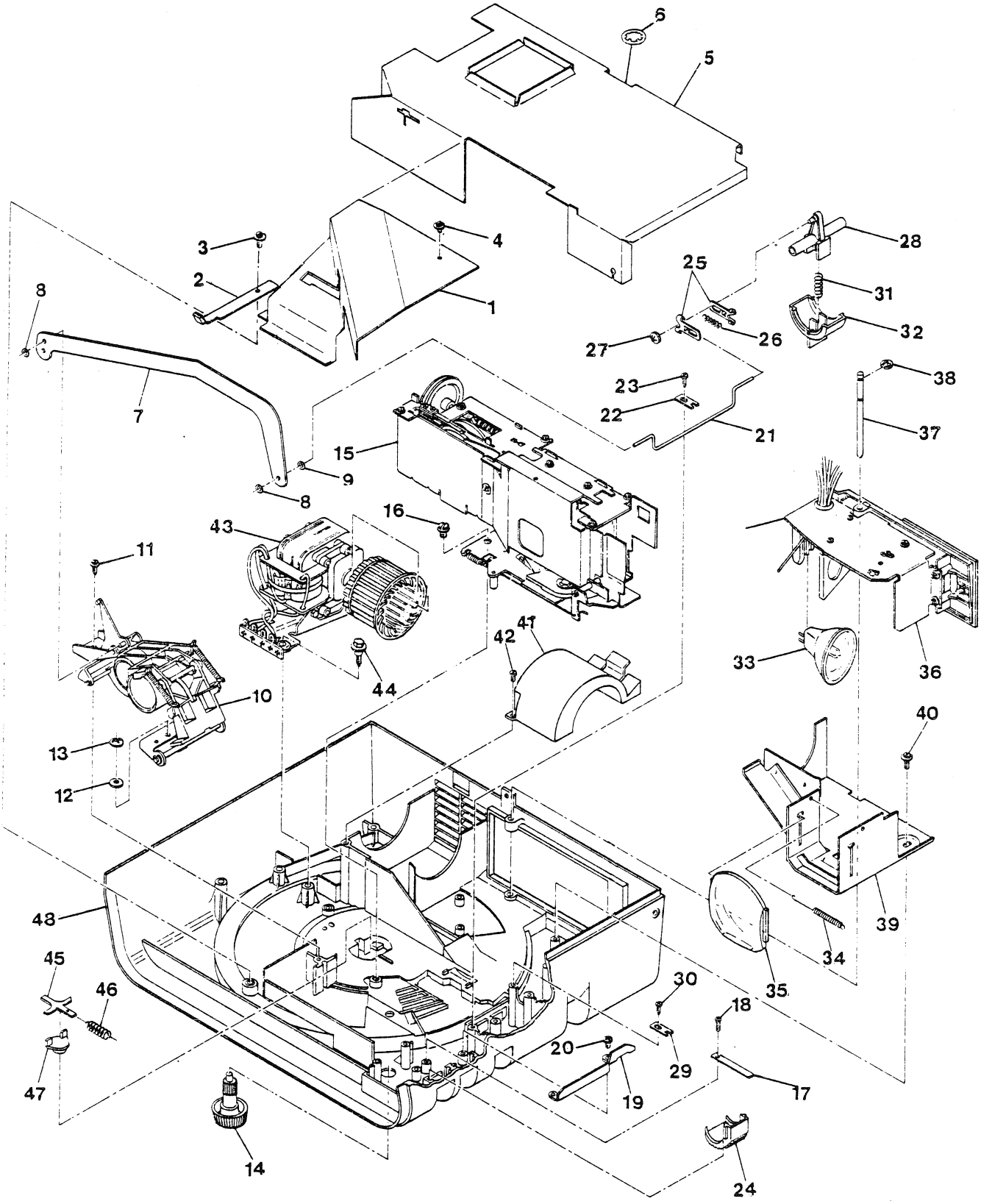

Figure 4. UPPER HOUSING COMPLETE

FIG. & INDEX NO.	PART NUMBER	DESCRIPTION Rev AJ	QTY	MODELS USED ON
		(Referenced from 1, Figure 2)		
4-	45302-G1	UPPER HOUSING COMPLETE 120V, 60Hz	REF	3350, 3330, 3340, 3320
	45302-G2	UPPER HOUSING COMPLETE, INT. (220V, 50Hz)	REF	3354, 3334, 3344, 3324
	45302-G3	UPPER HOUSING COMPLETE, Japan(100V, 50/60Hz).	REF	3356J, 3336J, 3346J, 3326J
-1	45644-P2	. BAFFLE, Lens	1	ALL
		ATTACHING PARTS		
-2	46144-G3	. BUMPER ASSEMBLY	1	ALL
-3	137-8R-6L	. SCREW, Thread Forming No. 8 x 3/8 Pan hd	1	ALL
-4	137-6R-6L	. SCREW, Thread Forming No. 6 x 3/8 Pan hd	2	ALL
-5	46192-P2	. BAFFLE	1	ALL
		ATTACHING PARTS		
-6	254-2-1	. RETAINER	1	ALL
		--***---		
-7	45545-P1	. LINK, Actuator	1	ALL
		ATTACHING PARTS		
-8	46417-P1	. RETAINER, Link	2	ALL
-9	261-13	. EYELET	1	ALL
		--- *** ---		
-10	45535-G1	. LENS MECHANISM ASSEMBLY (Figure 8)	1	3350, 3330, 3340, 3320, 3356J, 3336J, 3346J, 3326J
	45535-G2	LENS MECHANISM ASSEMBLY	1	3354, 3334, 3344, 3324
		ATTACHING PARTS		
-11	139-6R-6L	. SCREW, Thread Cutting No. 6 x 3/8 Hex hd.	2	ALL
-12	224-19	. WASHER, Spring(Bowed)	1	ALL
-13	45307-P1	. RETAINER	1	ALL
		--- *** ---		
-14	45626-G1	. KNOB, Focusing	1	ALL
-15	45320-G1	. MECHANISM COMPLETE(Figure 9)	1	ALL
		ATTACHING PARTS		
-16	143-8-3X	. SCREW, Machine 8-32 x 3/18 Hex hd	3	ALL
		--- *** ---		
-17	45317-P1	. SPRING, Switch	3	ALL
		ATTACHING PARTS		
-18	137-6R-6L	. SCREW, Thread Cutting No. 6 x 3/8 Pan hd	3	ALL
		--- *** ---		
-19	45318-P1	. BRACKET, Switch	1	ALL
		ATTACHING PARTS		
-20	137-6R-6L	. SCREW, Thread Cutting No. 6 x 3/8 Pan hd	2	ALL
		--- *** ---		
-21	45555-P2	. CRANK	1	ALL
		ATTACHING PARTS		
-22	45331-P1	. RETAINER, Crank	2	ALL
-23	137-6R-6L	. SCREW, Thread Cutting No. 6 x 3/8 Pan hd	2	ALL
		--- *** ---		
-24	45316-P1	. BUTTON, Control	3	ALL
-25	45374-P1	. LINK, Handle	2	ALL
-26	45625-P1	. SPRING, Link	1	ALL
		ATTACHING PARTS		
-27	43452-P1	. RETAINER, Link	1	ALL
		--- *** ---		
-28	45587-P1	. AXLE, Handle	1	ALL
		ATTACHING PARTS		
-29	45331-P1	. RETAINER	2	ALL
-30	137-6R-6L	. SCREW, Thread Cutting No. 6 x 3/8 Pan hd	2	ALL
		--- *** ---		
-31	45585-P1	. SPRING	1	ALL
-32	45554-P1	. HANDLE, Actuator	1	ALL
-33	44925-P2	. LAMP (DDM Type)	1	ALL

FIG. & INDEX NO.	PART NUMBER	DESCRIPTION Rev AJ	QTY	MODELS USED ON
4-		UPPER HOUSING COMPLETE (Cont.)		
-34	45551-P1	. SPRING, Shield Closure	1	ALL
-35	45423-P1	. LENS, Condenser	1	ALL
-36		. LAMPHOUSE ASSEMBLY(Figure 12)	REF	ALL
		ATTACHING PARTS		
-37	45422-P1	. PIN, Hinge	1	ALL
-38	251-9-1	. RING, Retaining	2	ALL
		--- *** ---		
-39	45427-G1	. SHIELD ASSEMBLY, Lamp	1	ALL
		ATTACHING PARTS		
-40	139-6R-6L	. SCREW, Thread Cutting No. 6 x 3/8 Hex hd.	3	ALL
		--- *** ---		
-41	46137-G1	. COVER, Blower	1	3350, 3330, 3340, 3320
	46137-G2	. COVER, Blower	1	Except 3350, 3330, 3340, 3320
		ATTACHING PARTS		
-42	116-4-4X	. SCREW, Machine 4-40 x $\frac{1}{4}$ Pan hd.	1	ALL
		---*** ---		
-43		. BLOWER ASSEMBLY, Motor(Figure 13).	REF	ALL
		ATTACHING PARTS		
-44	139-8-8X	. SCREW, Motor Mounting	4	ALL
		--- *** ---		
-45	43809-P1	. LATCH, Tray	1	ALL
-46	43810-P1	. SPRING, Tray Latch	1	ALL
-47	43811-P1	. CAM, Latch	1	ALL
-48	45303-G2	. HOUSING ASSEMBLY, Upper	1	ALL
	45308-G1	. . HANDLE ASSEMBLY	1	ALL
	189-5-7	. . ROLL PIN.	1	ALL
	45312-P1	. . RETAINER	1	ALL
	30685-P26	. . DOWEL PIN	1	ALL

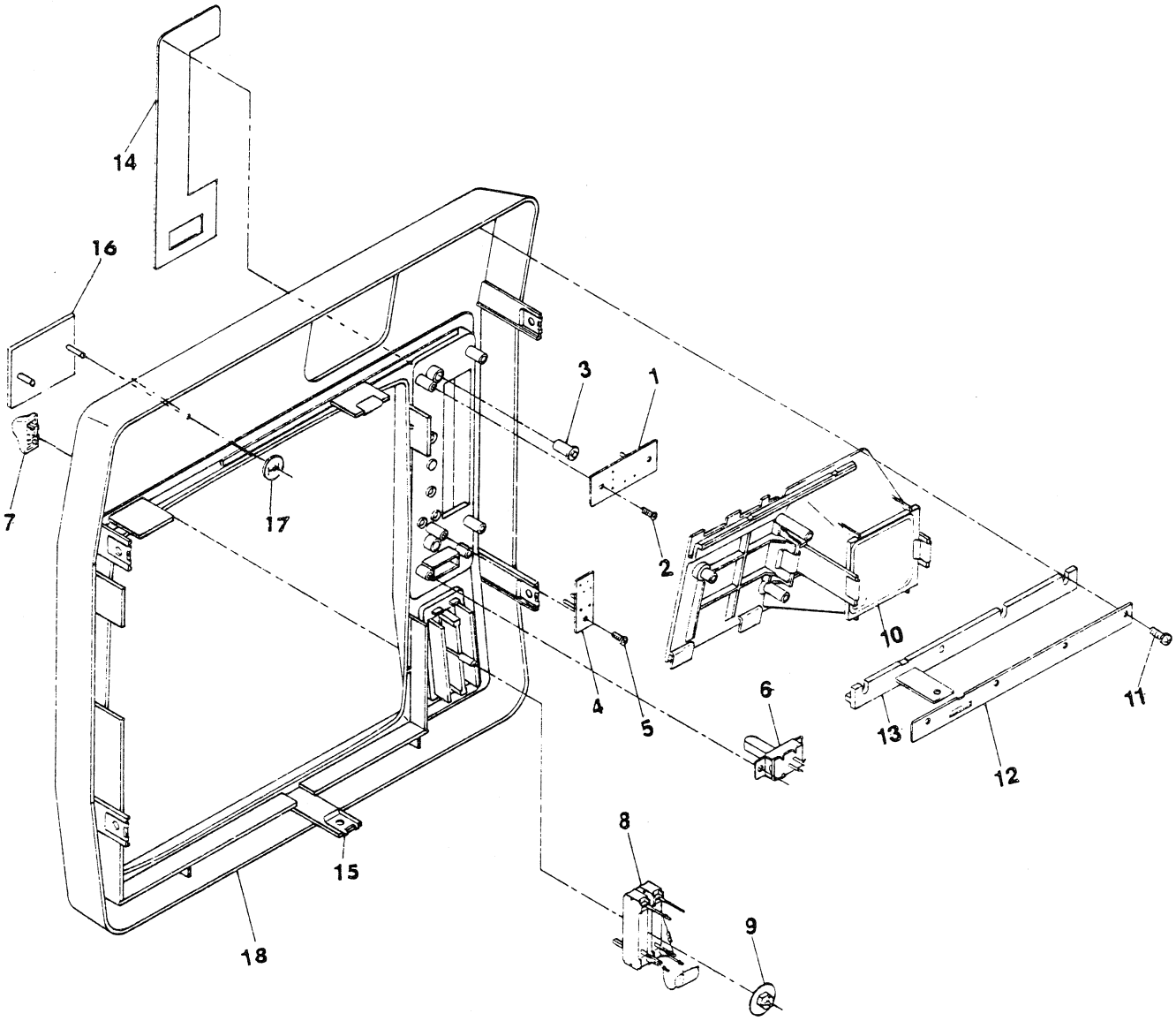

Figure 5. BEZEL COMPLETE

FIG. & INDEX NO.	PART NUMBER	DESCRIPTION Rev K	QTY	MODELS USED ON
5-	45481-G2	BEZEL COMPLETE (P/R) SP.	REF	3350, 3354, 3356J
	45481-G3	BEZEL COMPLETE (P) SP	REF	3330, 3334, 3336J
	45481-G4	BEZEL COMPLETE (P/R).	REF	3340, 3344, 3346J
	45481-G5	BEZEL COMPLETE (P).	REF	3320, 3324, 3326J
-1	45605-G2	. HARNESS ASSY., Record Indicator/SP (Figure 21). .	1	3350, 3354, 3356J
	45562-G1	. CIRCUIT BOARD COMPLETE (Figure 22)	1	3330, 3334, 3336J
		ATTACHING PARTS		
-2	146-4R-6L	. SCREW, Thread Forming Np. 4 x 3/8 Pan hd	2	3350, 3354, 3356J, 3330, 3334, 3336J
		- - - * * * - - -		
-3	45958-P1	. BUTTON.	1	3350, 3354, 3356J, 3330, 3334, 3336J
-4	45605-G1	. HARNESS ASSY., Record Indicator(non SP)Figure 23)	1	3340, 3344, 3346J
		ATTACHING PARTS		
-5	146-4R-6L	. SCREW, Thread Forming No. 4 x 3/8 Pan hd	2	3340, 3344, 3346J
		- - - * * * - - -		
-6*		. SWITCH, Power (See Figure 2, Item 17).	1	ALL
-7*	43878-P1	. CAP	2	ALL
-8*	45137-G4	. TONE & VOLUME CONTROL ASSY. (Figure 14) . . .	1	ALL
		ATTACHING PARTS		
-9*	45500-P1	. RETAINER (for Post .156"-- Prior to Code L9). . . .	1	ALL
	44954-P1	. RETAINER (for Post .180"--Starting Code L9).	1	ALL
		- - - * * * - - -		
-10*	45488-G1	. DOOR ASSEMBLY, Mirror(Figure 15)	1	ALL
		ATTACHING PARTS		
-11*	146-6R-8L	. SCREW, Thread Forming No. 6 x ½ Pan hd.	1	ALL
-12*	45475-P1	. PLATE.	1	ALL
-13*	45499-P1	. GUIDE	1	ALL
		- - - * * * - - -		
-14	45690-P2	. PLATE, Data(For Slide-type Switch).	1	3350, 3354, 3356J
	45690-P1	. PLATE, Data(For Slide-type Switch).	1	3330, 3334, 3336J
	45690-P4	. PLATE, Data(For Slide-type Switch).	1	3340, 3344, 3346J
	45690-P3	. PLATE, Data(For Slide-type Switch).	1	3320, 3324, 3326J
	45690-P6	. PLATE, Data(For Rocker-type Switch)	1	3350, 3354, 3356J
	45690-P5	. PLATE, Data(For Rocker-type Switch)	1	3330, 3334, 3336J
	45690-P8	. PLATE, Data(For Rocker-type Switch)	1	3340, 3344, 3346J
	45690-P7	. PLATE, Data(For Rocker-type Switch)	1	3320, 3324, 3326J
-15	45476-P1	. NUT, Spring	5	ALL
	45486-P2	. NAMEPLATE, Tone Volume (Not shown)	1	ALL
-16	45623-G1	. PANEL ASSEMBLY.	1	ALL
-17	43452-P1	. RETAINER	1	ALL
-18	45483-P2	. BEZEL (Slide-type Switch).	1	ALL
	45483-P4	. BEZEL (For Rocker-type Switch)	1	ALL

*NOTE: These parts are part of Projector Assy(13 Figure 1)

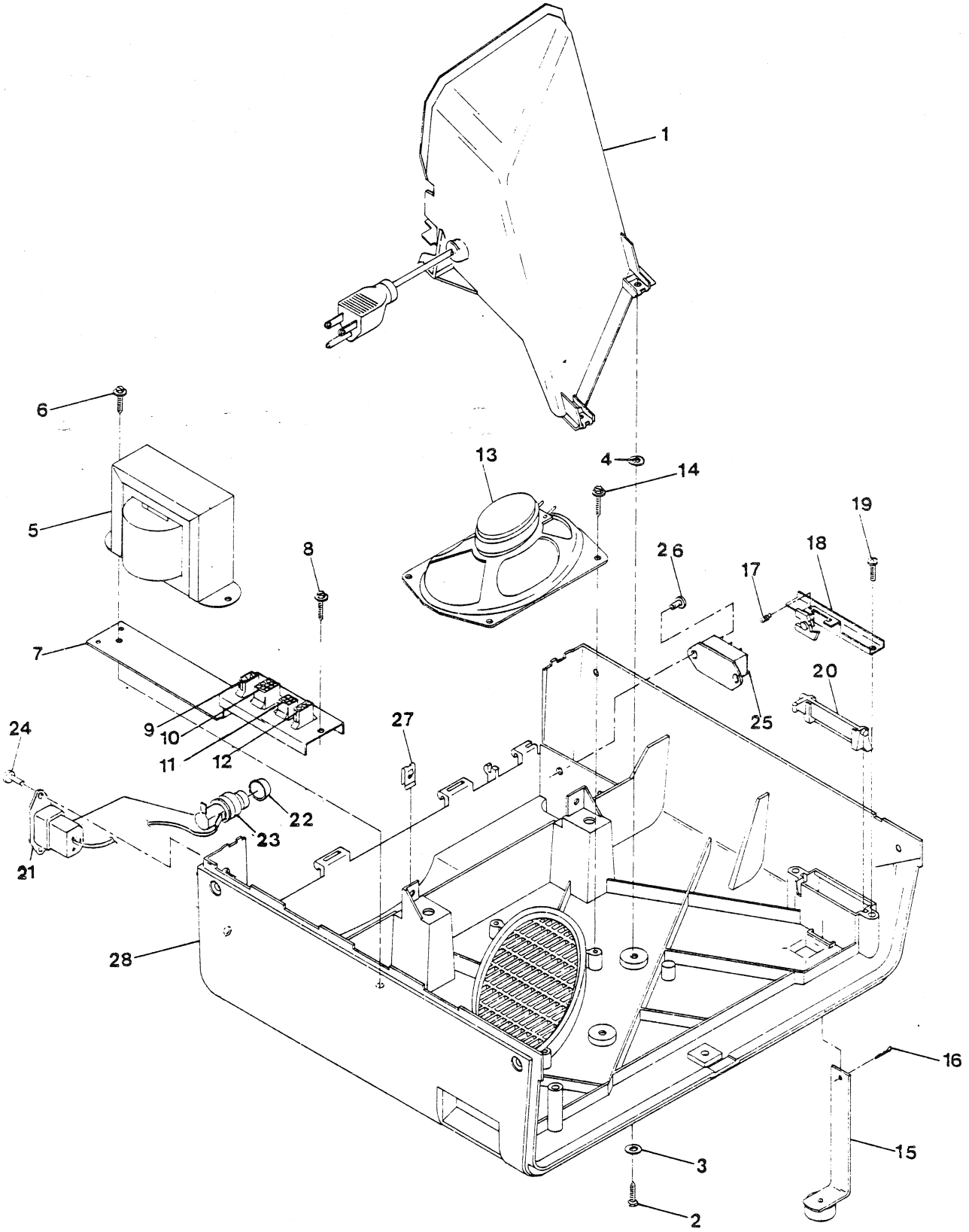

Figure 6. LOWER HOUSING ASSEMBLY

FIG. & INDEX NO.	PART NUMBER	DESCRIPTION Rev.AC	QTY	MODELS USED ON
		(Referenced from 21, Figure 2)		
6-	45461-G1	HOUSING ASSEMBLY, Lower (120V)	REF	3450, 3330, 3340, 3320
	45461-G3	HOUSING ASSEMBLY, Lower (100V)	REF	3356J, 3336J, 3346J, 3326J,
	45461-G5	HOUSING ASSEMBLY, Lower (220/240V)	REF	3354, 3334, 3344, 3324
-1		. SUPPORT ASSEMBLY, Mirror (Figure 16)	REF	ALL
		ATTACHING PARTS		
-2	40921-P10L	. SCREW	4	ALL
-3	38500-P21X	. WASHER, Flat 0.500 x 0.196 x 0.062	4	ALL
-4	33500-P18X	. WASHER, Flat .625 x .178 x .064	AR	ALL
	33500-P21X	. WASHER. Flat .500 x .196 x .062	AR	ALL
		--- *** ---		
-5	45603-G1	. TRANSFORMER ASSEMBLY	1	3450, 3040, 3020
	45677-G2	. TRANSFORMER ASSEMBLY	1	3356J, 3346J, 3336J 3326J, 3354, 3344, 3334 3324
		ATTACHING PARTS		
-6	147-8-8L	. SCREW, Thread Forming No. 8 x ½ Pan hd	2	ALL
		--- *** ---		
	SS 359	. . FUSE (3 amp)	1	ALL
	44505-P6	. . HOUSING, Outer(not shown)	1	3350, 3340, 3330, 3320
-7	45474-G1	. PLATE AND HARNESS ASSEMBLY	1	3350, 3340, 3330, 3320
	45678-G1	. PLATE AND HARNESS ASSEMBLY	1	3356J, 3346J, 3336J 3326J, 3354, 3344, 3334 3324
		ATTACHING PARTS		
-8	147-8-8L	. SCREW, Thread Forming No. 8 x ½ Pan hd	1	ALL
		--- *** ---		
-9	44505-P12	. . HOUSING, Outer	1	3350, 3340, 3330, 3320
-10	44505-P5	. . HOUSING, Inner	1	3350, 3340, 3330, 3320
-11	44505-P3	. . HOUSING, Inner	1	3350, 3340, 3330, 3320
-12	44505-P11	. . HOUSING, Inner	1	3350, 3340, 3330, 3320
-13	45604-G1	. SPEAKER ASSEMBLY	1	3350, 3340, 3330, 3320
	45604-G2	. SPEAKER ASSEMBLY	1	3356J, 3346J, 3336J, 3326J 3354, 3344, 3334, 3324
		ATTACHING PARTS		
-14	147-8-8L	. SCREW, Thread Forming No. 8 x ½ Pan hd	2	ALL
-15	41216-G4	. FOOT ASSEMBLY, Elevating	2	ALL
		ATTACHING PARTS		
-16	268-1	. TIE, Wire	2	ALL
		--- *** ---		
-17	41195-P1	. SPRING	2	ALL
-18	41218-G1	. GUIDE ASSEMBLY, Right	1	ALL
	41218-G2	. GUIDE ASSEMBLY, Left	1	ALL
		ATTACHING PARTS		
-19	146-6R-8L	. SCREW, Thread Forming No. 6 x ½ Pan hd	4	ALL
		--- *** ---		
-20	46140-P1	. ACTUATOR	2	ALL
	46421-G1	. RECEPTACLE ASSEMBLY	1	Except 3350, 3340, 3330 3320
-21	46088-P2	. . RECEPTACLE	1	Except 3350, 3340, 3330 3320
-22	46237-P3	. . CARRIER, Fuse	1	Except 3350, 3340, 3330 3320
-23	46237-P2	. . BODY, Fuse Holder	1	Except 3350, 3340, 3330 3320
		ATTACHING PARTS		
-24	45673-P6	. RIVET	2	Except 3350, 3340, 3330 3320
		--- *** ---		

FIG. & INDEX NO.	PART NUMBER	DESCRIPTION Rev.AC	QTY	MODELS USED ON
-25	45689-G1	. SWITCH ASSEMBLY, Line Change	1	3354, 3344, 3334, 3324
		ATTACHING PARTS		
-26	45673-P6	. RIVET	2	3354, 3344, 3334, 3324
		--- *** ---		
	410-14	. FUSE (3.15 AMP) not shown	1	3356J, 3346J, 3336J, 3326J
	410-17	. FUSE (2.0 AMP)	1	3354, 3344, 3334, 3324
-27	45476-P1	. NUT, Spring	2	ALL
-28	45464-P5	. HOUSING, Lower	1	3350, 3340, 3330, 3320
	45464-P9	. HOUSING, Lower	1	3354, 3344, 3334, 3324
	45464-P7	. HOUSING, Lower	1	3356J, 3346J, 3336J, 3326J
	45687-G1	. CONNECTOR ASSEMBLY, Fan Motor	1	Except 3350, 3340, 3330 3320

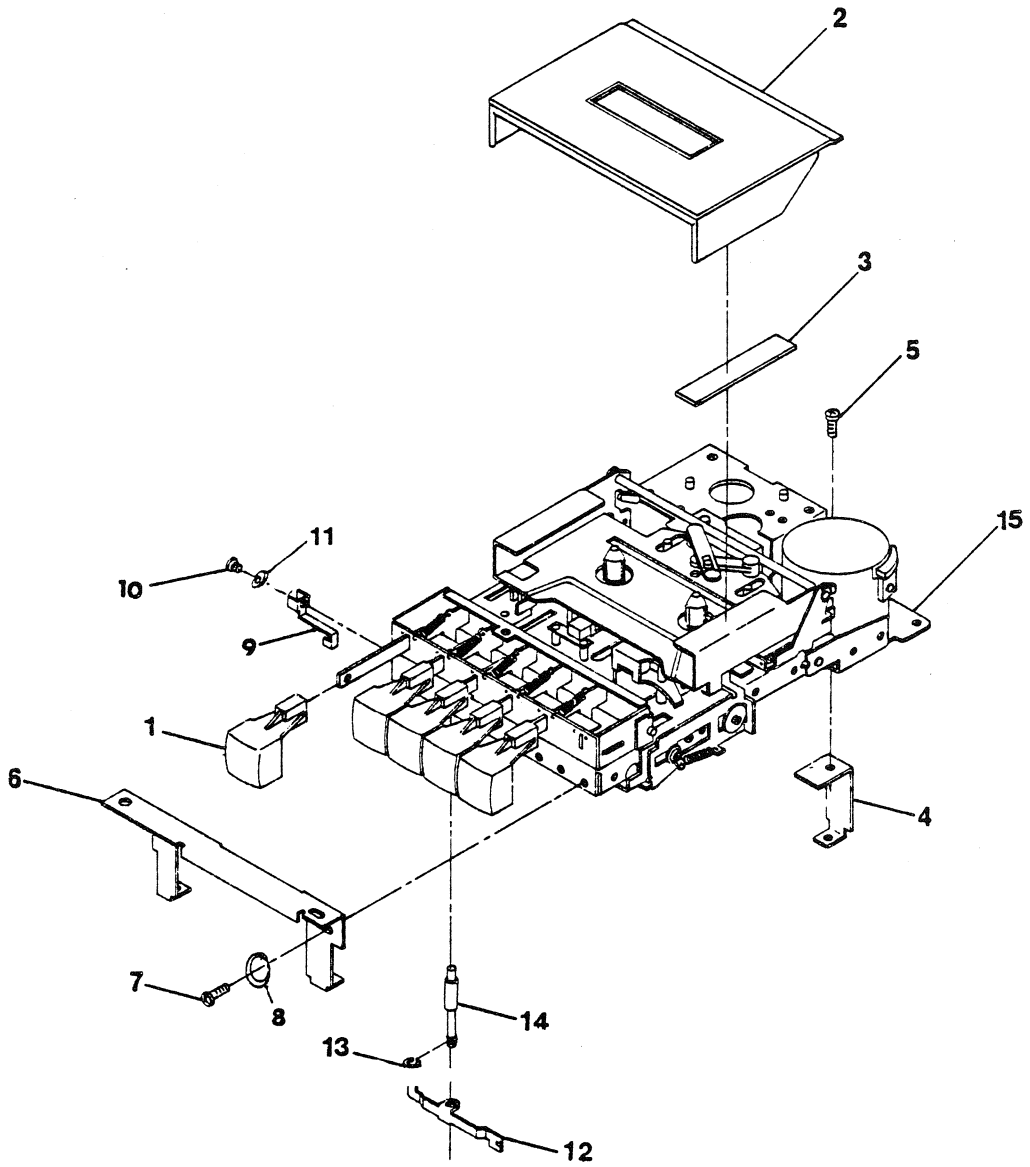

Figure 7. TAPE DECK COMPLETE

FIG. & INDEX NO.	PART NUMBER	DESCRIPTION Rev R	QTY	MODELS USED ON
7-	45506-G1	TAPE DECK COMPLETE (P/R)SP.	REF	3350, 3354, 3356J
	45506-G2	TAPE DECK COMPLETE (P)	REF	3330, 3320, 3334, 3324, 3336J, 3326J
	45506-G3	TAPE DECK COMPLETE (P/R)	REF	3340, 3344, 3346J
-1	45509-P3	. BUTTON	5	ALL
-2	44037-G4	. DOOR ASSEMBLY	1	ALL
		ATTACHING PARTS		
-3	461-10	. TAPE (#4416 -- 3M Co.) (9 yd roll)	1	ALL
		--- *** ---		
-4	45515-P1	. BRACKET	1	ALL
		ATTACHING PARTS		
-5	148-5-4X	. SCREW, Thread Forming No. 5 x $\frac{1}{4}$ Hex hd	1	ALL
		--- *** ---		
-6	45510-P1	. BRACKET MOUNTING	1	ALL
		ATTACHING PARTS		
-7	148-5-4X	. SCREW, Thread Forming No. 5 x $\frac{1}{4}$ Hex hd	2	ALL
-8	220-5	. WASHER LOCK	2	ALL
		--- *** ---		
-9	45514-P1	. ACTUATOR	1	Except 3330, 3334, 3336J 3320, 3324, 3326J
		ATTACHING PARTS		
-10	112-1-3X	. SCREW, Machine 1/64 x 3/16 Truss hd	1	3350, 3354, 3356J, 3340 3344, 3346J
-11	230-1	. WASHER, Lock	1	3350, 3354, 3356J, 3340 3344, 3346J
		--- *** ---		
-12	45512-P2	. LEVER, Switch	1	3350, 3354, 3356J, 3340 3344, 3346J
		ATTACHING PARTS		
-13	251-5-1	. RING, Retaining	1	3350, 3354, 3356J, 4430 3344, 3346J
		--- *** ---		
-14	45511-P1	. PIVOT, Switch Lever	1	3350, 3354, 3356J, 3340 3344, 3346J
-15	45508-P2	*. TAPE DECK ASSEMBLY (P/R)	1	3350, 3354, 3356J, 3340 3344, 3346J
	45508-P1	. TAPE DECK ASSEMBLY (P)	1	3330, 3334, 3336J, 3320 3324, 3326J
		* NOTE: See Tape Deck Service Manual TD 8003		
	45599-G1	. HARNESS ASSEMBLY, Tape Deck not shown	NA	3350, 3354, 3356J
	45599-G2	. HARNESS ASSEMBLY, Tape Deck not shown	NA	3340, 3344, 3346J
	45652-G1	. HARNESS ASSEMBLY, Tape Deck not shown	NA	3330, 3334, 3336J, 3320 3324, 3326J
	44512-P7	. . CONVERTER	1	3350, 3354, 3356J, 3340 3344, 3346J
	44552-P10	. . CONVERTER	1	3330, 3334, 3336J, 3320 3324, 3326J
	44361-P3	. . HARNESS ASSEMBLY	1	3340, 3344, 3346J

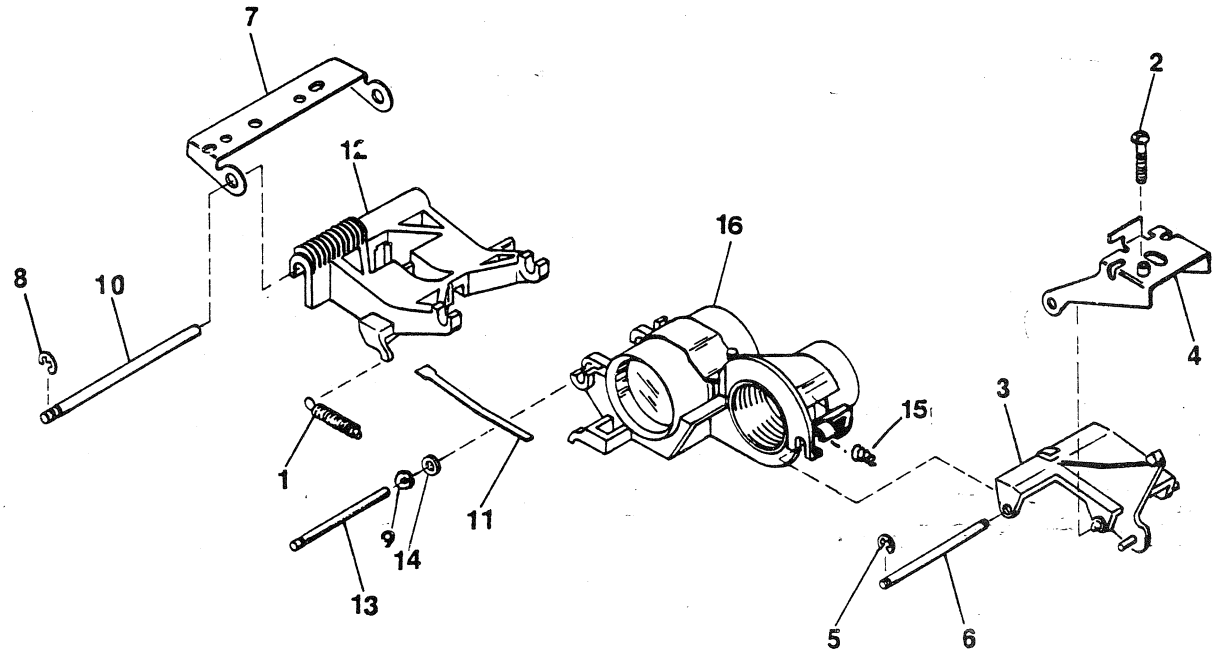

Figure 8. LENS MECHANISM ASSEMBLY

FIG. & INDEX NO.	PART NUMBER	DESCRIPTION Rev. E	QTY	MODELS USED ON
8-	45535-G1	LENS MECHANISM ASSEMBLY.	REF	3350,3330,3340,3320, 3356J,3336J,3346J,3326J
	45535-G2	LENS MECHANISM ASSEMBLY	REF	3354,3334,3344,3324
-1	45551-P1	. SPRING, Extension	2	All
-2	145-4R-12X	. SCREW, Machine 4/40 x 3/4 Hex socket hd	1	All
-3	45541-P1	. ACTUATOR.	1	All
-4	45540-G1	. BRACKET ASSEMBLY	1	All
		ATTACHING PARTS		
-5	251-7-1	. RING, Retaining	2	All
-6	45543-P1	. ROD, Lens Rack	1	All
		---***---		
-7	45548-P1	. BRACKET, Lens Rack	1	All
		ATTACHING PARTS		
-8	251-10-1	. RING, Retaining	2	All
-9	224-19-	. WASHER, Bowed.	1	All
		---***---		
-10	45549-P1	. ROD, Lens Rack	1	All
-11	45550-P1	. SPRING, Load	1	All
-12	45547-P1	. RACK, Lens	1	All
-13	45552-P1	. ROD, Lens Rack	1	All
-14	33500-P31H	. WASHER, Flat 0.247 x 0.128 x 0.032	1	All
15	46771-P1	. SPRING	1	3354,3334,3344,3324
16	45536-G1	. PLATFORM ASSEMBLY, Lens	1	All

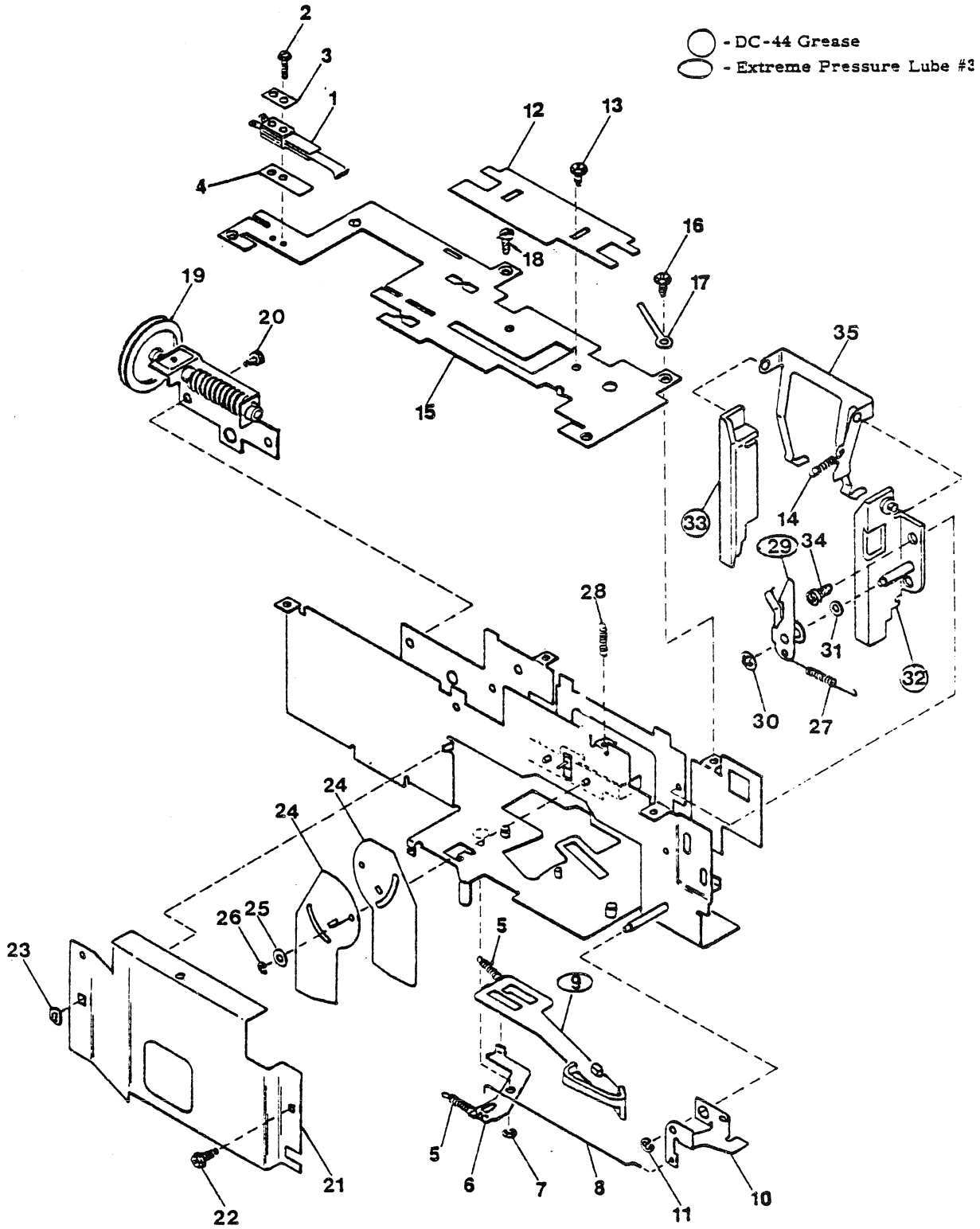

Figure 9. MECHANISM COMPLETE (Stage I)

FIG. & INDEX NO.	PART NUMBER	DESCRIPTION Rev.AV	QTY	MODELS USED ON
9-	45320-G1	MECHANISM COMPLETE (Stage I)	REF	ALL
-1	45525-P2	. SWITCH	1	ALL
		ATTACHING PARTS		
-2	148-4-6L	. SCREW, Thread Forming No. 4 x 3/8 Hex hd	2	ALL
-3	45664-P1	. HEADER	1	ALL
-4	45650-P1	. INSULATOR	1	ALL
		--- *** ---		
-5	45343-P1	. SPRING, Index Return	2	ALL
-6	45390-P1	. LEVER, Select	1	ALL
		ATTACHING PARTS		
-7	251-7-1	. RING, Retaining	1	ALL
		--- *** ---		
-8	45391-P1	. LINK, Select	1	ALL
-9	45340-G2	. ARM ASSEMBLY, Index	1	ALL
-10	45392-P2	. ARM, Select	1	ALL
		ATTACHING PARTS		
-11	251-7-1	. RING, Retaining	1	ALL
		--- *** ---		
-12	45589-P1	. PLATE, Slide Adjuster	1	ALL
		ATTACHING PARTS		
-13	148-6-4L	. SCREW, Thread Forming No. 6 x $\frac{1}{4}$ Hex hd	2	ALL
		--- *** ---		
-14	45383-P1	. SPRING, Face Clamp	1	ALL
-15	45394-P3	. COVER, Mechanism Frame	1	ALL
		ATTACHING PARTS		
-16	148-6-4-L	. SCREW, Thread Forming No. 6 x $\frac{1}{4}$ Hex hd	3	ALL
-17	45646-G1	. LUG ASSEMBLY	2	ALL
-18	148-6-6L	. SCREW, Thread Forming No. 6 x 3/8 Hex hd	1	ALL
		--- *** ---		
-19	45528-G1	. WORM AND PULLEY ASSEMBLY	1	ALL
		ATTACHING PARTS		
-20	148-6-4L	. SCREW, Thread Forming No. 6 x 1.4 Hex hd	2	ALL
		--- *** ---		
-21	45359-P1	. MASK, Shutter	1	All
		ATTACHING PARTS		
-22	148-6-4L	. SCREW, Thread Forming No. 6 x 1/4 Hex hd	1	All
-23	39299-P1	. NUT, Spring	1	All
		---***---		
-24	46045-P1	. BLADE, Shutter	2	ALL
		ATTACHING PARTS		
-25	41846-P23X	. WASHER, Flat 0.330 x 0.114 x 0.110	2	ALL
-26	251-5-1	. RING, Retaining	2	ALL
		--- *** ---		
-27	45385-P1	. SPRING, Edge Clamp	1	ALL
-28	38192-P2	. SPRING, Shutter Lever	1	ALL
-29	45384-P1	. CLAMP, Slide Edge	1	ALL
		ATTACHING PARTS		
-30	254-6-1	. RING, Retaining	1	ALL
-31	30473-P79	. WASHER, Flat 0.312 x 0.131 x 0.015	1	ALL
		--- *** ---		
-32	45381-P1	. GUIDE, Slide Right	1	ALL
-33	45380-P1	. GUIDE, Slide Left	1	ALL
		ATTACHING PARTS		
-34	140-6R-4X	. SCREW, Thread Forming No. 6 x $\frac{1}{4}$ Pan hd	4	ALL
		--- *** ---		
-35	45382-P2	. CLAMP, Slide Face	1	ALL

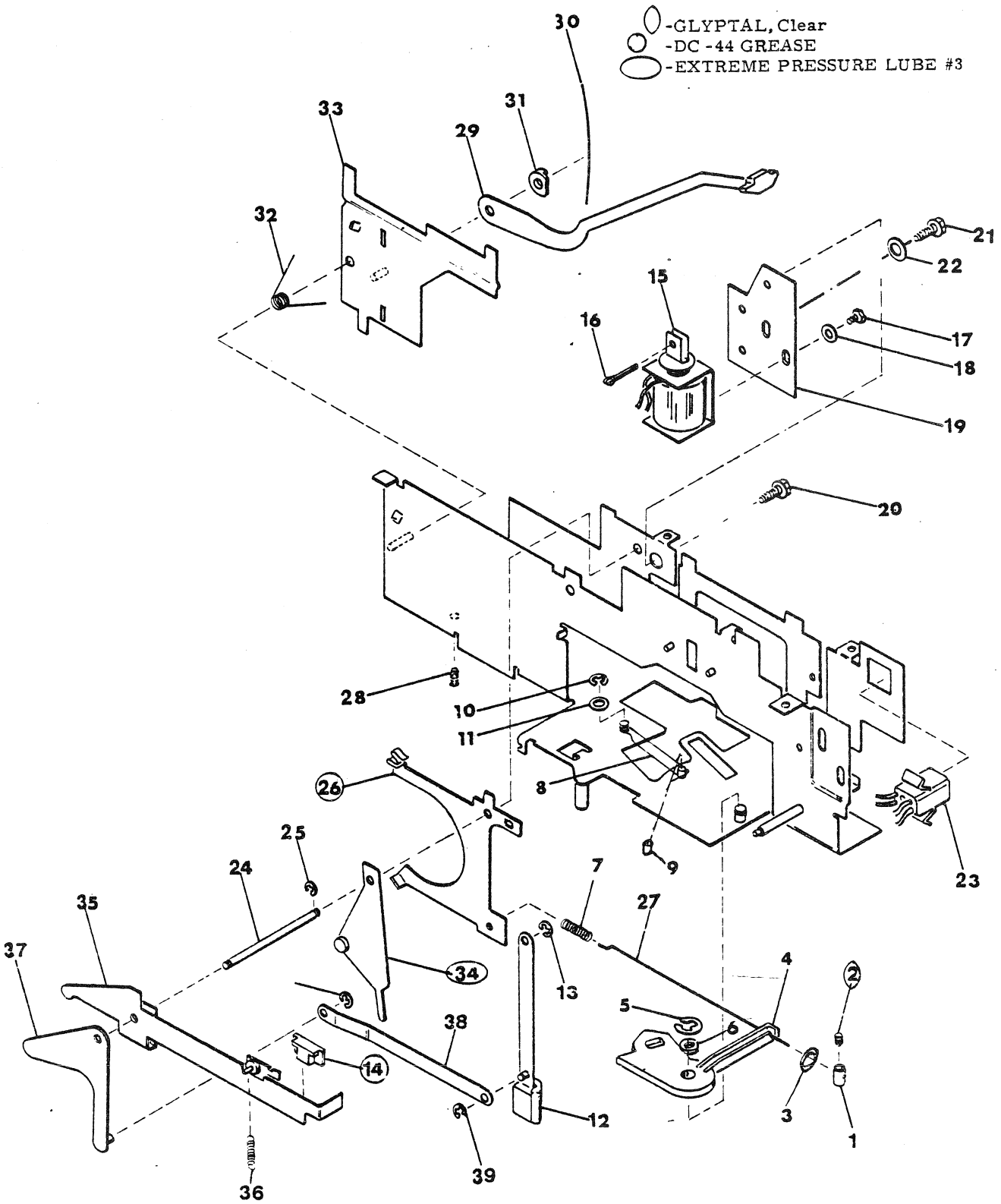

Figure 10. MECHANISM COMPEETE (Stage II)

FIG. & INDEX NO.	PART NUMBER	DESCRIPTION Rev. AV	QTY	MODELS USED ON
10-	45320-G1	MECHANISM COMPLETE (Stage II)	REF	All
-1	45347-P1	. NUT, Adjusting (Front Rear Cam)	1	All
		ATTACHING PARTS		
-2	171-6-3	. SCREW, Set	1	All
		- - - * * * - - -		
-3	43270-P10	. WASHER, Flat 0.195 x 0.025 x 0.60	1	All
-4	45345-P2	. CAM, Front Rear	1	All
		ATTACHING PARTS		
-5	251-11-1	. RING, Retaining	1	All
		- - - * * * - - -		
-6	35473-P48	. WASHER, Flat 0.500 x 0.254 x 0.005	AR	All
-7	45346-P1	. SPRING, Cam Return	1	All
-8	45344-P2	, SPRING, Index Guide	1	All
-9	46167-P1	. BUMPER	1	All
		ATTACHING PARTS		
-10	251-9-1	. RING, Retaining	1	All
-11	43260-P21	. WASHER, Flat 0.250 x 0.163 x 0.005	1	All
		- - - * * * - - -		
-12	45368-G1	. ARM ASSEMBLY, Detent	1	All
		ATTACHING PARTS		
-13	251-7-1	. RING, Retaining	2	All
		- - - * * * - - -		
-14	45349-P1	. SPACER, Shutter Lever	2	All
-15	46163-G3	. SOLENOID ASSEMBLY	1	All
		ATTACHING PARTS		
-16	46770-P1X	. PIN, Solenoid	1	All
-17	118-6-3X	. SCREW, Machine 6/32 x 3/16 Hex hd	2	All
-18	38473-P7X	. WASHER, Flat 0.375 x 0.146 x 0.042	2	All
		- - - * * * - - -		
-19	45583-P2	. PLATE, Solenoid	1	All
		ATTACHING PARTS		
-20	148-6-4L	. SCREW, Thread Forming No. 6 x 1/4 Hex hd	1	All
-21	148-6-4L	. SCREW, Thread Forming No. 6 x 1/4 Hex hd	1	All
-22	38473-P7X	. WASHER, Flat 0.375 x 0.146 x 0.042	1	All
		- - - * * * - - -		
-23	44505-P10	. HOUSING, Inner	1	All
-24	43720-P1	. SHAFT, Lever Pivot	1	All
		ATTACHING PARTS		
-25	251-7-1	. RING, Retaining	1	All
		- - - * * * - - -		
-26	46792-G1	. ESCAPEMENT LEVER ASSY	1	All
-27	45348-P1	. LINK, Cam-Front Rear	1	All
-28	171-A4-6	. SCREW, Set	1	All
-29	45372-G1	. LIFTER ASSEMBLY	1	All
-30	45576-P1	. WIRE, Lifter	1	All
-31	45575-P1	. WASHER, Lifter	1	All
-32	45578-P1	. SPRING, Lifter	1	All
-33	45577-P1	. LIFTER ASSEMBLY	1	All
-34	45417-G1	. LEVER ASSEMBLY, Index Follower	1	All
-35	45350-G3	. LEVER ASSEMBLY, Shutter Cam	1	All
-36	45354-P1	. . SPRING, Shutter	1	All
-37	45363-G1	. LEVER ASSEMBLY, Detent Follower	1	All
-38	45366-P1	. CROSSBAR, Detent	1	All
		ATTACHING PARTS		
-39	251-7-1	. RING, Retaining	1	All
		- - - * * * - - -		

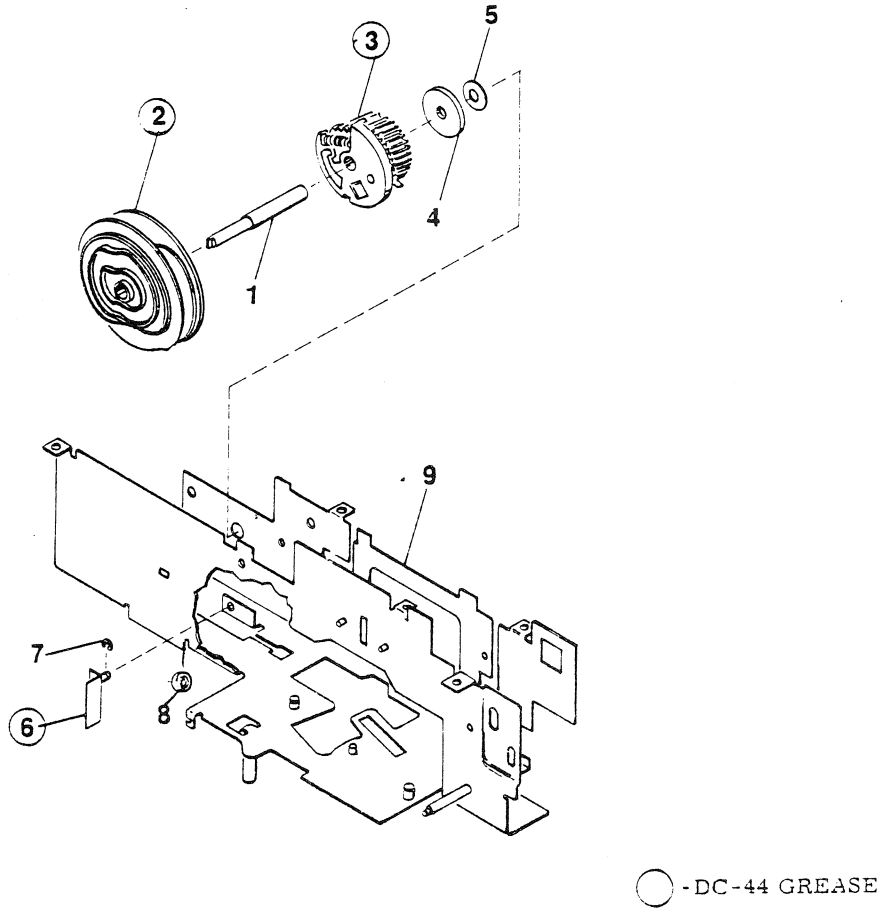

Figure 11. MECHANISM COMPLETE (Stage III)

FIG. & INDEX NO.	PART NUMBER	DESCRIPTION Rev.AV	QTY	MODELS USED ON
11-	45320-G1	MECHANISM ASSEMBLY COMPLETE (Stage III)	REF	
-1	45371-P1	. SHAFT, Cam	1	ALL
-2	45414-G2	. CAM ASSEMBLY	1	ALL
-3	45332-G3	. CLUTCH COMPLETE	1	ALL
	45337-P1	. . SPRING, Drive	1	ALL
	45336-P1	. . SPRING, Overload	1	ALL
	45339-P1	. . SPRING, Drag	1	All
-4	45532-P1	. WASHER, Clutch	1	ALL
-5	40627-P19X	. WASHER, Flat 0.545 x 0.256 x 0.025	1	ALL
	30473-P68X	. WASHER, Flat 0.593 x 0.265 x 0.032	1	ALL
	33500-P30X	. WASHER, Flat 0.625 x 0.257 x 0.042	AR	ALL
-6	45387-G1	. PAWL ASSEMBLY	AR	ALL
		ATTACHING PARTS		
-7	251-7-1	. RING, Retaining	1	ALL
		--- *** ---		
-8	46167-P1	. BUMPER	1	ALL
-9	45321-G5	. FRAME ASSEMBLY	1	ALL

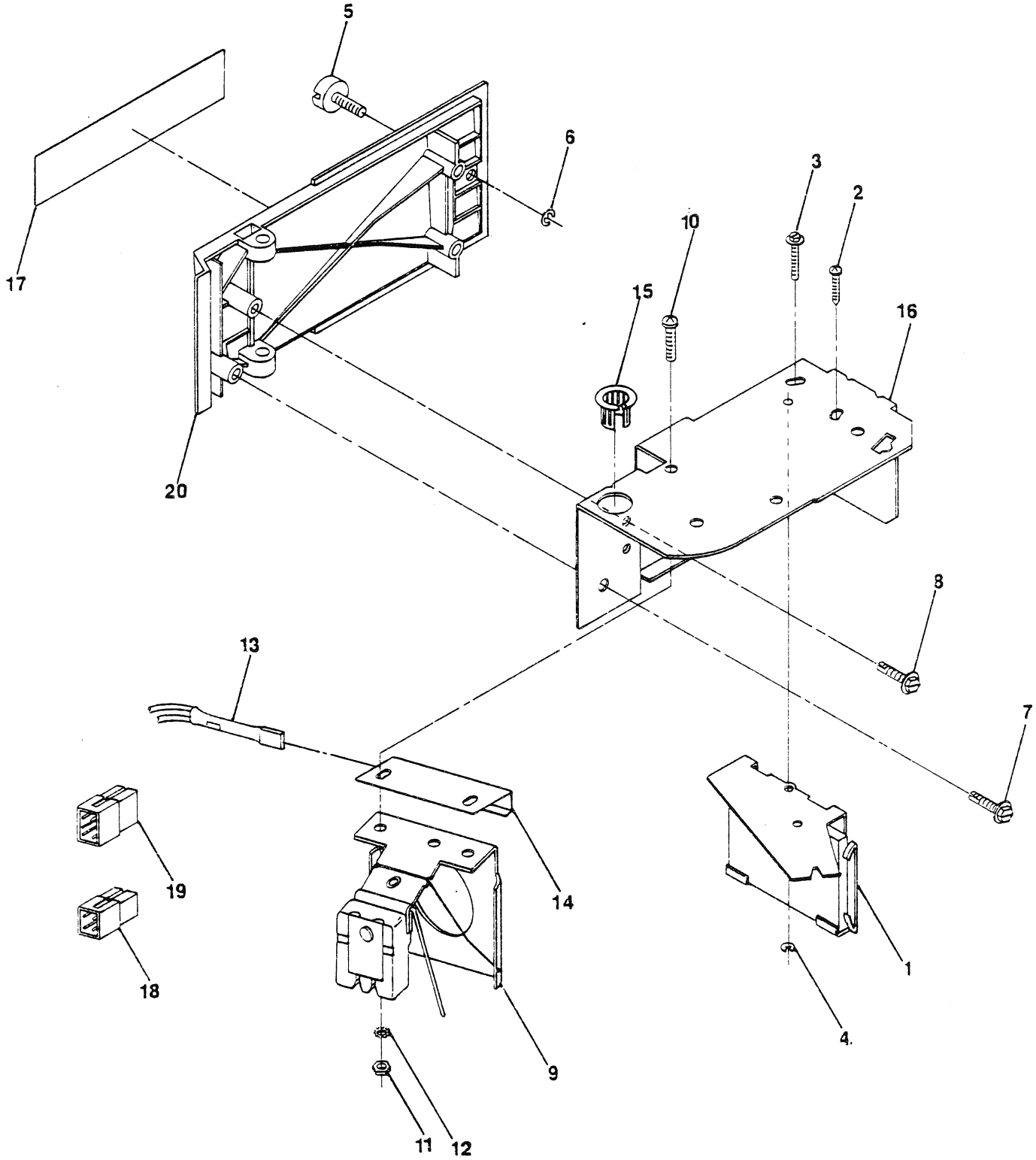

Figure 12. LAMPHOUSE ASSEMBLY

FIG. & INDEX NO.	PART NUMBER	DESCRIPTION Rev.AB	QTY	MODELS USED ON
		(Referenced from 37, Figure 4)		
12-	45405-G1	LAMPHOUSE ASSEMBLY 50 Hz	REF	3350, 3340, 3340, 3320
	45405-G2	LAMPHOUSE ASSEMBLY 60 Hz	REF	3354, 3334, 3344, 3324 3356J, 3336J, 3346J, 3326J
-1	45406-G1	. MIRROR ASSEMBLY, Lamp	1	ALL
		ATTACHING PARTS		
-2	148-4-6X	. SCREW, Thread Forming No. 4 x 3/8 Hex Hd.	1	ALL
-3	148-4-10X	. SCREW, Thread Forming No. 4 x 5/8 Hex hd.	1	ALL
-4	251-7-1	. RING, Retaining	1	ALL
		--- *** ---		
-5	116-8-8L	. SCREW, Machine 8/32 x ½ Pan hd	1	ALL
		ATTACHING PARTS		
-6	43270-P18	. WASHER, Flat 0.312 x 0.153 x 0.033	1	ALL
		--- *** ---		
	45408-G2	. BASE COMPLETE	1	3350, 3340, 3330, 3320
	45408-G4	. BASE COMPLETE	1	3354, 3334, 3344, 3324 3356J, 3336J, 3346J, 3326J
		ATTACHING PARTS		
-7	139-8-8G	. SCREW, Thread Cutting No. 8 x ½ Hex hd	3	ALL
		--- *** ---		
-8	121-8R-6H	. . SCREW, Thread Forming No. 8 x 3/8 Pan hd(Grd) .	1	ALL
-9	46389-G2	. . LAMP HOLDER	1	3350, 3340, 3330, 3320
	45682-G1	. . LAMP HOLDER	1	3354, 3334, 3344, 3324 3356J, 3336J, 3346J, 3326J
		ATTACHING PARTS		
-10	116-5R-6X	. . SCREW, Machine 5-40 x 3/8 Pan hd	2	ALL
-11	200-5H-X	. . NUT	2	ALL
-12	220-5	. . WASHER, Lock	2	ALL
		--- *** ---		
-13	46188-G1	. . SWITCH ASSEMBLY, Thermal	1	3350, 3340, 3330, 3320
-14	45121-P1	. . CLAMP	1	ALL
-15	45600-P1	. . BUSHING	1	ALL
-16	45408-G1	. . BASE ASSEMBLY	1	ALL
-17	45645-P3	. LABEL, Caution	1	ALL
	41415-P1	. CONNECTOR	1	3350, 3340, 3330, 3320
	37949-P1	. CONNECTOR	1	3350, 3340, 3330, 3320
-18	44505-P10	. HOUSING, Inner (4 connection)	1	3350, 3340, 3330, 3320
-19	44361-P2	. HOUSING, Outer (6 connection)	1	3350, 3340, 3330, 3320
	44505-P13	. HOUSING, Inner (2 connection) not shown	1	3354, 3334, 3344, 3324 3356J, 3336J, 3346J, 3326J
-20	45424-P3	. DOOR	1	ALL

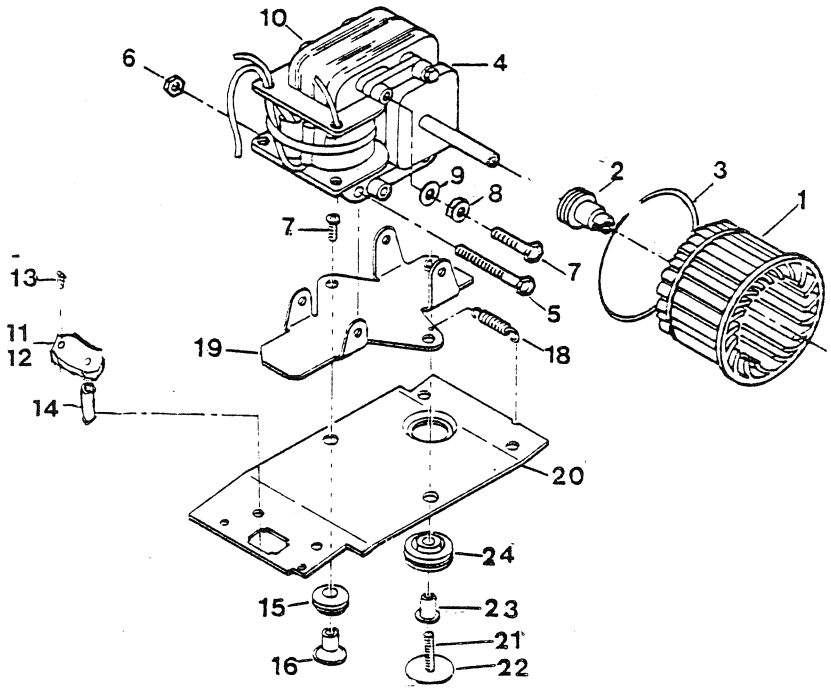

Figure 13, BLOWER MOTOR ASSEMBLY

FIG. & INDEX NO.	PART NUMBER	1 2 3 4 5 DESCRIPTION Rev.W	QTY	MODELS USED ON
		Referenced from 45, Figure 4		
13-	46138-G1	BLOWER MOTOR ASSEMBLY (120V, 60Hz)	REF	3350, 3330, 3340, 3320
	46138-G3	BLOWER MOTOR ASSEMBLY (120/230V, 50Hz)	REF	3354, 3324, 3334, 3344
	46138-G4	BLOWER MOTOR ASSEMBLY (100V, 50Hz)	REF	3356J, 3346J, 3336J, 3326J
-1	45402-G1	. WHEEL ASSEMBLY (1.940 Dia.)	1	3350, 3330, 3340, 3320
	45402-G2	. WHEEL ASSEMBLY (2.440 Dia.)	1	3354, 3324, 3334, 3344 3356J, 3346J, 3336J, 3326J
-2	45400-G1	. PULLEY ASSEMBLY, 60 Hz	1	3350, 3330, 3340, 3320
	45400-G2	. PULLEY ASSEMBKY, 50 Hz	1	3354, 3324, 3334, 3320 3356J, 3346J, 3336J, 3326J
-3	33400-P20	. BELT	1	ALL
-4	46191-P2	. MOTOR (120V, 60Hz) M-1	1	3350, 3330, 3340, 3320,
	46390-P2	. MOTOR (220V, 50Hz) M-3	1	3354, 3324, 3334, 3344
	46420-P2	. MOTOR (100V, 50Hz) M-4	1	3356J, 3346J, 3336J, 3326J
		ATTACHING PARTS		
-5	46191-P3	. SCREW, Motor Mount	2	ALL
-6	46191-P4	. NUT, Motor Mount	2	ALL
		--- *** ---		
-7	140-8R-8X	. SCREW, Thread Forming No. 8 x ½ Pan hd	1	ALL
-8	45240-P1	. SPACER	1	ALL
-9	33500-P62X	. WASHER, Flat 0.375 x 0.166 x 0.032	1	3354, 3324, 3334, 3344
-10	46439-P1	. STUD, Spacer	1	ALL
-11	45293-P8	. HOUSING	1	3354, 3324, 3334, 3344
-12	46165-P1	. BRACKET	1	3354, 3324, 3334, 3344
-13	124-4R-20X	. SCREEN	2	3354, 3324, 3334, 3344
-14	43807-20	. SPACER	2	3354, 3324, 3334, 3344
	46134-G2	. MOUNT ASSEMBLY	1	ALL
-15	265-14	. . GROMMET	2	ALL
-16	46128-P1	. . SPACER	2	ALL
-17	116-8R-8X	. . SCREW, Machine 8/32 x 1/2 Pan hd.	2	ALL
-18	46127-P1	. . BRACKET	1	ALL
-19	46139-P1	. . SPRING	1	ALL
-20	46129-P2	. . PLATE	1	ALL
-21	116-8R-12X	. . SCREW, Machine 8/32 x 3/4 Pan hd.	1	ALL
-22	43260-P23	. . WASHER, Flat 0.750 x 0.173 x 0.042	1	ALL
-23	46135-P3	. . FERRULE	1	ALL
-24	46135-P2	. . GROMMET	1	ALL
	44505-P9	. HOUSING	1	3350, 3330, 3340, 3320 3354, 3324, 3334, 3344

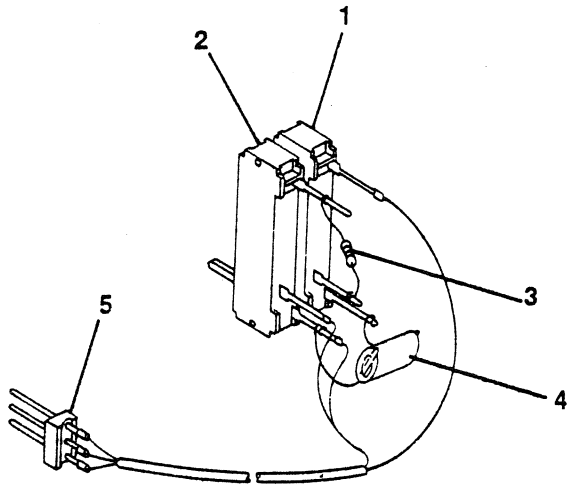

Figure 14. TONE AND VOLUME ASSEMBLY

FIG. & INDEX NO.	PART NUMBER	DESCRIPTION Rev. L	QTY	MODELS USED ON
14-	45137-G4	TONE AND VOLUME ASSEMBLY	REF	All
-1	44386-P5	. RESISTOR (VR-2)	1	All
-2	44386-P4	. RESISTOR (VR-1)	1	All
-3	406-222-3	. RESISTOR (R-42) 2200 ohm ±5% 1/4 watt.	1	All
-4	42756-P11	. CAPACITOR (C-27) 0.1 uf ±10% 100V	1	All
-5	44552-P7	. CONNECTOR.	1	All

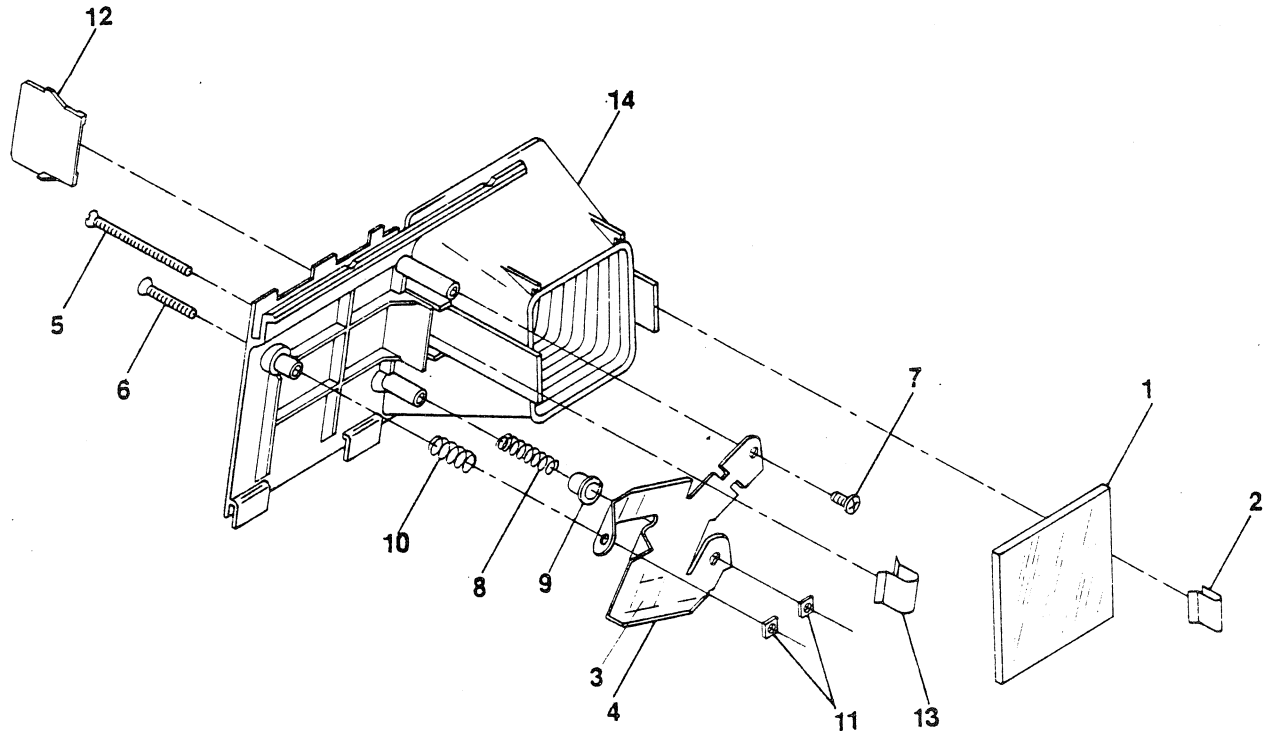

Figure 15. MIRROR DOOR COMPLETE

FIG. & INDEX NO.	PART NUMBER	DESCRIPTION Rev. K	QTY	MODELS USED ON
15-	45488-G1	MIRROR DOOR COMPLETE	REF	All
-1	45491-P1	. WINDOW	1	All
		ATTACHING PARTS		
-2	45691-P1	. CLIP, Spring	2	All
		---***---		
-3	461-10	. TAPE (4416 3M Co.) (9 yards)	LP	All
-4	45494-P1	. SUPPORT	1	All
		ATTACHING PARTS		
-5	100-6R-28L	. SCREW, Long	1	All
-6	100-6R-14L	. SCREW, Short	1	All
-7	137-8R-6X	. SCREW, Thread Cutting No 8 x 3/8 Pan hd	1	All
-8	46175-P1	. SPRING, Long	1	All
-9	46174-P1	. GUIDE	1	All
-10	45497-P1	. SPRING, Short	1	All
-11	200-6SX	. NUT	2	All
		---***---		
-12	45493-P1	. HANDLE	1	All
		ATTACHING PARTS		
-13	45691-P1	. CLIP	1	All
		---***---		
-14	45490-P3	. DOOR	1	All

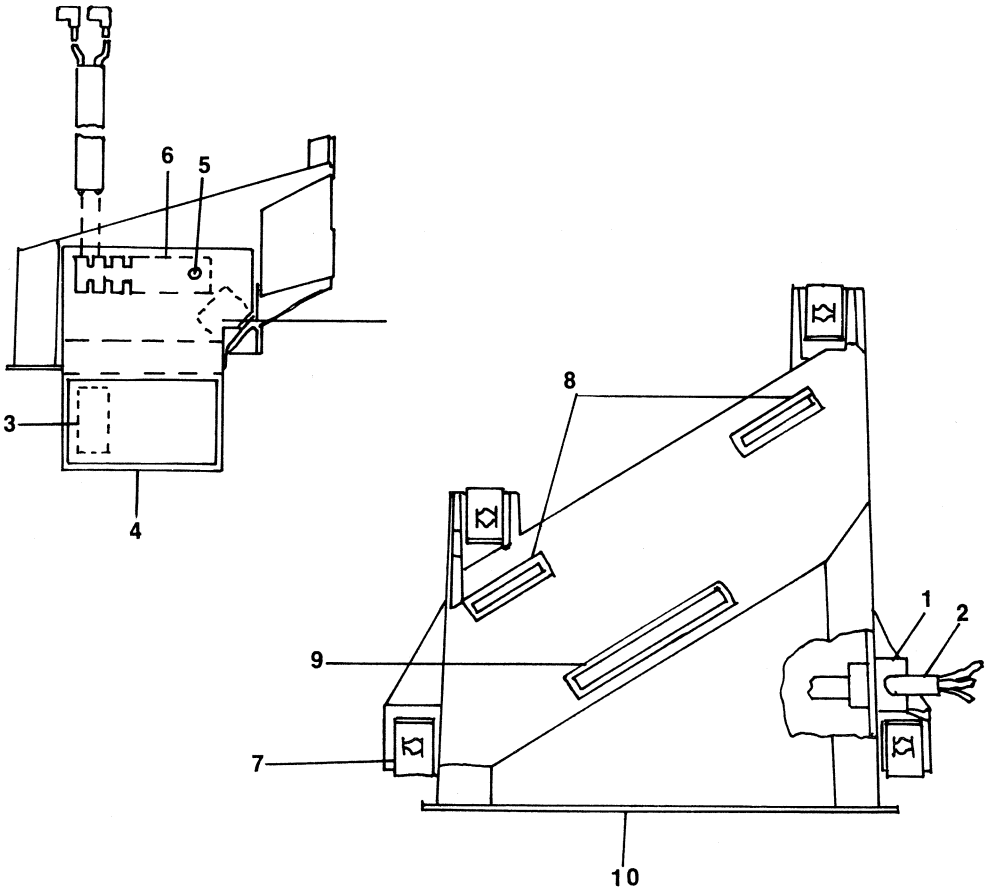

Figure 16. LARGE MIRROR SUPPORT ASSEMBLY

FIG. & INDEX NO.	PART NUMBER	DESCRIPTION Rev. K	QTY	MODELS USED ON
16-	45472-G1	LARGE MIRROR SUPPORT ASSEMBLY (120V)	REF	3350, 3340, 3330, 3320
	45472-G3	LARGE MIRROR SUPPORT ASSEMBLY (100V)	REF	3356J, 3346J, 3336J, 3326J
	45472-G4	LARGE MIRROR SUPPORT ASSEMBLY (220/240 V) . .	REF	3354, 3344, 3334, 3324
-1	243-1	. BUSHING, Sttain Relief	1	3350, 3340, 3330, 3320
-2	45614-G1	. CORD, Power.	1	3350, 3340, 3330, 3320
-3	45852-P1	. LABEL, Caution	1	Except 3350, 3340, 3330, 3320
-4	45672-P1	. BAFFLE.	1	3350, 3340, 3330, 3320
	45675-P2	. BAFFLE	1	3356J, 3346J, 3336J, 3326J
	45672-P3	. BAFFLE	1	3354, 3344, 3334, 3324
-5	45080-P8	. TERMINAL BLOCK	1	3356J, 3346J, 3336J3326J
	45080-P9	. TERMINAL BLOCK	1	3354, 3344, 3334, 3324
-6	45673-P4	. RIVET	2	Except 3350, 3340, 3330, 3320
-7	45476-P1	. NUT, Spring.	4	All
-8	461-9	. TAPE (4416 3M Co.)	1	All
-9	461-9	. TAPE (4416 3M Co.) 9 yd roll	1	All
-10	45473-P1	. SUPPORT	1	3350, 3340, 3330, 3320
	45473-P2	. SUPPORT	1	Except 3350, 3340, 3330, 3320

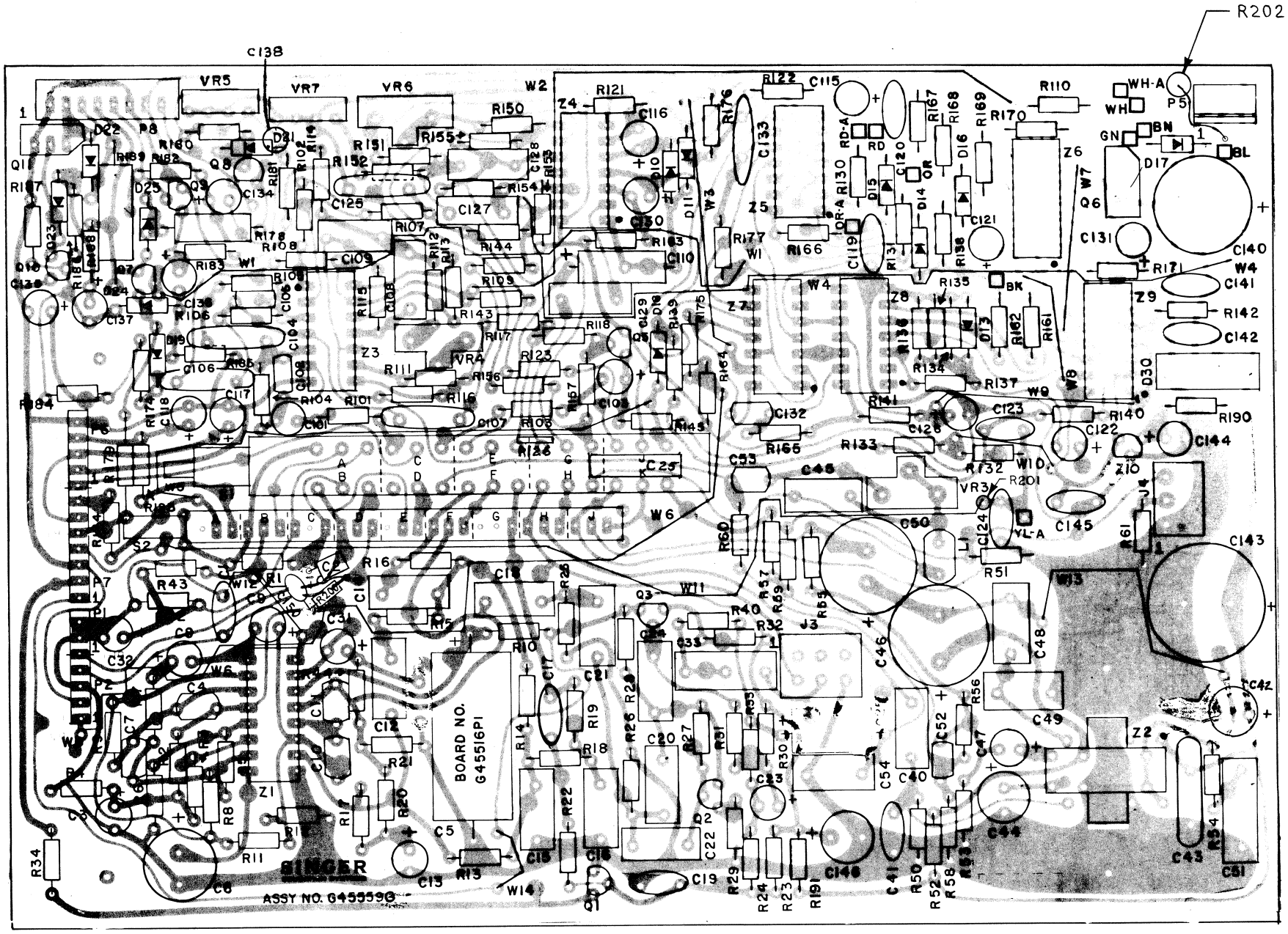

Figure 17. CIRCUIT BOARD ASSEMBLY (P/R) Prior to Code J9K

FIG. & INDEX NO.	PART NUMBER	DESCRIPTION Rev K	QTY	MODELS USED ON
17-	45559-G1	CIRCUIT BOARD ASSEMBLY (P/R) SP.	REF	3350, 3354, 3356J
	45559-G2	CIRCUIT BOARD ASSEMBLY (P/R)	REF	3340, 3344, 3346J
C-1	415J-P473K-H	CAPACITOR .047 mfd ±10%	1	All
C-2	450-R47-50M	" 47uf ± 20%	1	All
C-3	450-R22-50M	" .22uf ± 20%	1	All
C-4	415A-R470K-C	" 47pf ± 10%	1	All
C-5	42267-P019	" 470uf, 16V	1	All
C-6	42267-P009	" 220 uf, 16V	1	All
C-7	415B-P102K-D	" .001 mfd ±10%	1	All
C-8	450-R47-50M	" .47 uf ± 20%	1	All
C-9	450-R22-50M	" .22 uf ± 20%	1	All
C-10	415A-R470K-C	" 47 pf ± 10 %	1	All
C-11	415A-R470K-C	" 47 pf ± 10%	1	All
C-12	45147-P001	" .0022 uf ± 10%, 100V	1	All
C-13	42267-P014	" 47 uf, 16V	1	All
C-14	42756-P013	" .033 uf ± 10%, 100V	1	All
C-15	42756-P008	" .022 uf ± 10%, 100V	1	All
C-16	42756-P009	" .01 uf ± 10%	1	All
C-17	38339-P019	" .1 mfd ± 20%, 16V	1	All
C-18	42756-P013	" .033 uf ± 10%, 100V	1	All
C-19	38339-P019	" .1 mfd ± 20%, 16V	1	All
C-20	45147-P003	" .0047 uf ±10%, 100V	1	All
C-21	42756-P009	" .01 uf ±10%	1	All
C-22	45147-P003	" .0047 uf ± 10%, 100V	1	All
C-23	42267-P010	" 1 uf, 16V	1	All
C-24	45147-P002	" .0033 uf ± 10%, 100V	1	All
C-25	44030-P015	" 1 mfd ± 20%	1	All
C-31	42267-P018	" 2.2 uf, 25V	1	All
C-32	450-22R-10M	" 22 uf ± 20%	1	All
C-33	42756-P011	" .1 uf ± 10%, 100V	1	All
C-40	42756-P013	" .033 uf ± 10%, 100V	1	All
C-41	415A-P750K-H	" 75 pf ± 10%	1	All
C-42	42267-P015	" 100 mfd, 25V	1	All
C-43	415C-P104M-F	" .1 mfd ±10%	1	All
C-44	42267-P014	" 47 pf, 16V	1	All
C-45	42756-P009	" .01 uf + 10%	1	All
C-46	44030-P013	" 1K mfd	1	All
C-47	44030-P009	" 10 mfd	1	All
C-48	45147-P001	" .0022 uf ± 10%, 100V	1	All
C-49	42756-P009	" .01 uf ± 10%	1	All
C-50	44030-P011	" 470 mfd	1	All
C-51	42756-P011	" .1 uf ± 10%, 100V	1	All
C-52	415A-P101K-H	" 100 pf ± 10%	1	All
C-53	415B-P331K-H	" 330 pf ± 10%	1	All
C-54	45147-P001	" .0022 pf ± 10%, 100V	1	All
C-101	42267-P010	" 1 uf, 16V	1	All
C-102	415B-P222K-J	" .0022 mfd ±10%	1	3350, 3354, 3356J
	415A-P181K-H	" 180 pf ± 10%	1	3340, 3344, 3346J
C-103	44030-P009	" 10 mfd	1	All
C-104	38339-P020	" .22 mfd, 16V	1	All
C-105	415A-P181K-H	" 180 pf ± 10%	1	All
C-106	39339-P020	" .22 mfd, 16V	1	All
C-107	39339-P020	" .22 mfd, 16V	1	All
C-108	42756-P010	" .0068 uf ± 10%, 100V	1	All
C-109	42756-P010	" .0068 uf ± 10%, 100V	1	All
C-110	45147-P003	" .0047 uf ± 10%, 100V	1	3350, 3354, 3356J
C-112	42756-P009	" .01 uf ± 10%	1	3340, 3344, 3346J
C-115	42267-P010	" 1 uf, 16V	1	3340, 3344, 3346J
C-116	450-R47-50M	" .47 uf, 20V	1	3350, 3354, 3356J
C-117	42267-P006	CAPACITOR .01 uf ± 10%	1	All
C-118	42267-P006	" .01 uf ± 10%	1	All
C-119	415B-P222K-J	" 2200 uf ± 10%	1	All

CARAMATE 3300

FIG. & INDEX NO.	PART NUMBER	DESCRIPTION	QTY	MODELS USED ON
C-120	415B-P222K-J	" 2200 uf ± 10%	1	All
C-121	42267-P010	" 1 uf, 16V	1	All
C-122	450-4R7-25M	" 4.7 uf ± 20%	1	All
C-123	38339-P019	" .1 mfd ± 20%	1	3350, 3354, 3356J
C-124	415B-P222K-J	" 2200 uf ± 10%	1	3350, 3354, 3356J
C-125	38339-P020	" .22 mfd, 16V	1	All
C-126	42267-P010	" 1 uf, 16V	1	All
C-127	42756-P015	" .047 uf ± 10%, 100V	1	3350, 3354, 3356J
C-128	42756-P015	" .047 uf ± 10%, 100V	1	3350, 3354, 3356J
C-129	42756-P013	" .033 ± 10%, 100V	1	3350, 3354, 3356J
C-130	450-R47-50M	" .47 uf ± 20%	1	3350, 3354, 3356J
C-131	42267-P010	" 1 uf, 16V	1	All
C-132	38339-P019	" .1 mfd ± 20%, 16V	1	3350, 3354, 3356J
C-133	38339-P019	" .1 mfd ± 20%, 16V	1	3350, 3354, 3356J
C-134	42267-P018	" 2.2 uf, 25V	1	3350, 3354, 3356J
C-135	44030-P009	" 10 mfd	1	3350, 3354, 3356J
C-136	44030-P009	" 10 mfd	1	All
C-137	450-10R-10M	" 10 uf ± 20%	1	3350, 3354, 3356J
	450-22R-10M	" 22 uf ± 20%	1	3340, 3344, 3346J
C-138	415B-P102K-D	" 001 uf ± 10%	1	3350, 3354, 3356J
C-140	42267-P011	" 470 uf, 25V	1	All
C-141	415J-P473K-H	" 47000 pf ± 10%	1	All
C-142	415J-P473K-H	" 47000 pf ± 10%	1	All
C-143	42267-P013	" 2200 uf, 25V	1	All
C-144	450-4R7-25M	" 4.7 uf ± 20%	1	All
C-145	415J-P473K-H	" 47000 pf ± 10%	1	All
C-146	42267-P014	" 47 uf, 16V	1	All
C-150	415B-P331K-H	" 330 pf ± 10%	1	All
C152	415A-P181K-H	CAPACITOR 180 pf±10%, 100V	1	All
D-10	44522-P002	DIODE (IN3064)	1	3340, 3344, 3346J
D-11	44522-P002	DIODE (IN3064)	1	3340, 3344, 3346J
D-13	44522-P002	DIODE (IN3064)	1	All
D-14	44522-P002	DIODE (IN3064)	1	All
D-15	44522-P002	DIODE (IN3064)	1	All
D-16	44522-P002	DIODE (IN3064)	1	All
D-17	40875-P001	DIODE (IN 4003)	1	All
D-18	44522-P002	DIODE (IN3064)	1	3350, 3354, 3356J
D-19	44522-P002	DIODE (IN3064)	1	3350, 3354, 3356J
D-21	44522-P002	DIODE (IN3064)	1	3350, 3354, 3356J
D-22	40875-P001	DIODE (IN 4003)	1	All
D-24	44522-P002	DIODE (IN3064)	1	All
D-25	40875-P001	DIODE (IN 4003)	1	3350, 3354, 3356J
D-30	39324-P005	DIODE, Bridge	1	All
J-3	44507-P006	CONNECTOR	1	All
J-4	44553-P005	CONNECTOR	1	All
L-1	45596-P001	INDUCTOR (RC 375 Pace Elect., Ontario N.Y.)	1	All
P-1	44511-P003	CONNECTOR	1	All
P-2	44511-P003	CONNECTOR	1	All
P-5	45649-P001	CONNECTOR	1	All
P-6	44511-P002	CONNECTOR	1	All
P-7	44511-P002	CONNECTOR	1	All
P-8	45146-P008	CONNECTOR	1	All
Q-1	42721-P001	TRANSISTOR (MPS 6514)	1	All
Q-2	42721-P001	TRANSISTOR (MPS 6514)	1	All
Q-3	42721-P001	TRANSISTOR (MPS 6514)	1	All
Q-5	44294-P001	TRANSISTOR (2N4400)	1	All
Q-6	44518-P001	TRANSISTOR (D40C1)	1	All
Q-7	44294-P001	TRANSISTOR (2N4400)	1	3350, 3354, 3356J
Q-8	44519-P001	TRANSISTOR (MPS-A13)	1	3350, 3354, 3356J
	44294-P001	TRANSISTOR (2N4400)	1	3340, 3344, 3346J
Q-9	42721-P001	TRANSISTOR (MPS 6514)	1	All
Q-10	44294-P001	TRANSISTOR (2N4400)	1	All
Q-11	44518-P001	TRANSISTOR (D40C1)	1	All

FIG. & INDEX NO.	PART NUMBER	DESCRIPTION	QTY	MODELS USED ON
R-1	406-184-3	RESISTOR 180K ohm	1	All
R-2	406-473-3	" 47K ohm	1	All
R-3	406-151-3	" 150 ohm	1	All
R-4	406-821-3	" 820 ohm	1	All
R-5	406-562-3	" 5,600 ohm	1	All
R-6	406-181-3	" 180 ohm	1	All
R-7	406-223-3	" 22K ohm	1	All
R-8	406-332-3	" 3,300 ohm	1	All
R-9	406-124-3	" 120K ohm	1	All
R-10	406-181-3	" 180 ohm	1	All
R-11	406-104-3	" 100K ohm	1	All
R-12	406-104-3	" 100 K ohm	1	All
R-13	406-182-3	" 1,800 ohm	1	All
R-14	406-222-3	" 2,200 ohm	1	All
R-15	406-391-3	" 390 ohm	1	All
R-16	406-154-3	" 150 K ohm	1	All
R-17	406-221-3	" 220 ohm	1	All
R-18	406-751-3	" 750 ohm	1	All
R-19	406-433-3	" 43 K ohm	1	All
R-20	406-822-3	" 8,200 ohm	1	All
R-21	406-271-3	" 270 ohm	1	All
R-22	406-102-3	" 1 K ohm	1	All
R-23	406-334-3	" 330K ohm	1	All
R-24	406-103-3	" 10 K ohm	1	All
R-25	406-473-3	" 47 K ohm	1	All
R-26	406-153-3	" 15K ohm	1	All
R-27	406-155-3	" 1M ohm	1	All
R-28	406-393-3	" 39 K ohm	1	All
R-29	406-331-3	" 330 ohm	1	All
R-30	406-474-3	" 470 K ohm	1	All
R-31	406-474-3	" 470 K ohm	1	All
R-32	406-473-3	" 47 K ohm	1	All
R-33	406-103-3	" 10 K ohm	1	All
R-34	406-391-3	" 390 ohm	1	All
R-40	406-182-3	" 1,800 ohm	1	All
R-42	406-105-3	" 1M ohm	1	All
R-43	406-104-3	" 100 K ohm	1	All
R-44	406-562-3	" 5,600 ohm	1	All
R-50	406-224-3	" 220 K ohm	1	All
R-51	406-479-3	" 4.7 ohm	1	All
R-52	406-101-3	" 100 ohm	1	All
R-53	406-479-3	" 4.7 ohm	1	All
R-54	406-109-3	" 1 ohm	1	All
R-55	406-331-3	" 330 ohm	1	All
R-56	406-101-3	" 100 ohm	1	All
R-57	406-759-3	" 15 ohm	1	All
R-58	406-821-3	" 820 ohm	1	All
R-59	406-109-3	" 7.5 ohm	1	All
R-60	406-153-3	" 15 K ohm	1	All
R-61	406-101-3	" 100 ohm	1	All
R-101	406-332-3	" 3,300 ohm	1	3350, 3354, 3356J
	406-472-3	" 4700 ohm	1	3340, 3344, 3346J
R-102	406-105-3	" 1M ohm	1	All
R-103	406-183-3	" 18 K ohm	1	3350, 3354, 3356J
	406-333-3	" 33 K ohm	1	3340, 3344, 3346J
R-104	406-394-3	" 390 K ohm	1	All
R-105	406-183-3	RESISTOR 18 K ohm	1	All
R-106	406-394-3	" 390 K ohm	1	All
R-107	406-394-3	" 390 K ohm	1	All
R-108	406-273-3	" 27 K ohm	1	3350, 3354, 3356J
	406-153-3	" 15 K ohm	1	3340, 3344, 3346J
R-109	406-153-3	" 15 K ohm	1	3350, 3354, 3356J
R-110	406-184-3	" 180 K ohm	1	3340, 3344, 3346J

NOTE ALL RESISTORS ± 5% - ¼ watt

FIG. & INDEX NO.	PART NUMBER	DESCRIPTION	QTY	MODELS USED ON
R-111	406-334-3	" 330 K ohm	1	All
R-112	406-563-3	" 56 K ohm	1	All
R-113	406-224-3	" 220 K ohm	1	All
R-114	406-472-3	" 4,700 ohm	1	All
R-115	406-104-3	" 100 K ohm	1	All
R-116	406-334-3	" 330 K ohm	1	3350, 3354, 3356J
	406-105-3	" 1M ohm	1	3340, 3344, 3346J
R-117	406-184-3	" 180 K ohm	1	3350, 3354, 3356J
	406-124-3	" 120 K ohm	1	3340, 3344, 3346J
R-118	406-153-3	" 15 K ohm	1	All
R-120	406-104-3	" 100K ohm	1	3340, 3344, 3346J
R-121	406-105-3	" 1,000 K ohm	1	3350, 3354, 3356J
	406-474-3	" 470K ohm	1	3340, 3344, 3346J
R-122	406-125-3	" 1.2 M ohm	1	3340, 3344, 3346J
R-123	406-683-3	" 68 K ohm	1	3350, 3354, 3356J
	406-224-3	" 220 K ohm	1	3340, 3344, 3346J
R-124	406-681-3	" 680 ohm	1	All
R-125	406-681-3	" 680 ohm	1	All
R-126	406-683-3	" 68 K ohm	1	All
R-130	406-223-3	" 22 K ohm	1	All
R-131	406-103-3	" 10 K ohm	1	All
R-132	406-103-3	" 10 K ohm	1	3350, 3354, 3356J
R-133	406-223-3	" 22 K ohm	1	3350, 3354, 3356J
R-134	406-184-3	" 180 K ohm	1	All
R-135	406-474-3	" 470 K ohm	1	All
R-136	406-824-3	" 820 K ohm	1	All
R-137	406-223-3	" 22 K ohm	1	All
R-138	406-333-3	" 33 K ohm	1	All
R-139	406-223-3	" 22 K ohm	1	3350, 3354, 3356J
R-140	406-223-3	" 22 K ohm	1	3350, 3354, 3356J
R-141	406-473-3	" 47 K ohm	1	All
R-142	406-184-3	" 180 K ohm	1	3350, 3354, 3356J
R-143	406-184-3	" 180 K ohm	1	All
R-144	406-184-3	" 180 K ohm	1	3350, 3354, 3356J
R-145	406-271-3	" 270 ohm	1	All
R-150	406-334-3	" 330 K ohm	1	3350, 3354, 3356J
R-151	406-563-3	" 56 K ohm	1	3350, 3354, 3356J
R-152	406-472-3	" 4,700 ohm	1	3350, 3354, 3356J
R-153	406-224-3	" 220 K ohm	1	3350, 3354, 3356J
R-154	406-104-3	" 100 K ohm	1	3350, 3354, 3356J
R-155	406-334-3	" 330 K ohm	1	3350, 3354, 3356J
R-156	406-184-3	" 180 K ohm	1	3350, 3354, 3356J
R-157	406-223-3	" 22 K ohm	1	All
R-161	406-103-3	" 10 K ohm	1	All
R-162	406-223-3	" 22 K ohm	1	All
R-163	406-105-3	" 1 K ohm	1	3350, 3354, 3356J
R-164	406-103-3	" 10 K ohm	1	3350, 3354, 3356J
R-165	406-224-3	" 220 K ohm	1	3350, 3354, 3356J
R-166	406-103-3	" 10 K ohm	1	All
R-167	406-473-3	" 47 K ohm	1	All
R-168	406-223-3	" 22 K ohm	1	All
R-169	406-223-3	" 22 K ohm	1	All
R-170	406-473-3	" 47 K ohm	1	All
R-171	406-223-3	RESISTOR 22 K ohm	1	All
R-174	406-681-3	" 680 ohm	1	3350, 3354, 3356J
R-175	406-223-3	" 22 K ohm	1	3350, 3354, 3356J
R-176	406-473-3	" 47 K ohm	1	3350, 3354, 3356J
R-177	406-473-3	" 47 K ohm	1	3350, 3354, 3356J
R-178	408-270	" 27 ohm	1	3350, 3354, 3356J
R-179	406-122-3	" 1,200 ohm	1	3350, 3354, 3356J
R-180	406-102-3	" 1 K ohm	1	3350, 3354, 3356J
R-181	406-103-3	" 10 K ohm	1	3350, 3354, 3356J
R-182	406-104-3	" 100K ohm	1	All

NOTE: All Resistors ± 5% ¼ watt

FIG. & INDEX NO.	PART NUMBER	DESCRIPTION Rev K	QTY	MODELS USED ON
R 183	406-103-3	RESISTOR 10 K ohm	1	All
R-184	406-473-3	" 47 K ohm	1	3350, 3354, 3356J
	406-124-3	" 120 K ohm	1	3340, 3344, 3346J
R-185	406-103-3	" 10 K ohm	1	All
R-186	406-104-3	" 100 K ohm	1	All
R 187	406-103-3	" 10 K ohm	1	All
R-188	406-223-3	" 22 K ohm	1	All
R-189	409-150	" 15 ohm	1	All
R-190	406-180-3	" 18 ohm	1	All
R-191	406-271-3	" 270 ohm	1	All
R 192	406-472-3	" 4,700 ohm	1	All
R-195	406-122-3	" 1200 ohm	1	3340, 3344, 3346J
R-196	406-182-3	" 1800 ohm	1	3340, 3344, 3346J
R 197	402-22-0-3	" 22 ohm	1	3340, 3344, 3346J
R 198	408-121	" 120 ohm	1	3340, 3344, 3346J
R-200	406-102-3	" 1 K ohm	1	All
R-201	406-102-3	" 1 K ohm	1	3350, 3354, 3356J
R-202	409-390	RESISTOR 39 ohm	1	All
S-1	45160-P002	SWITCH	1	All
S-2	44521-P001	SWITCH	1	All
VR-3	40761-P012	POTENTIOMETER (100 K)	1	All
VR-4	40761-P008	POTENTIOMETER (50 K)	1	All
VR-5	44515-P002	POTENTIOMETER (1 K)	1	All
VR-6	40761-P008	POTENTIOMETER (50K)	1	3350, 3354, 3356J
VR-7	44515-P002	POTENTIOMETER (1K)	1	3350, 3354, 3356J
W-1		JUMPER	1	3350, 3354, 3356J
W-3		"	1	3350, 3354, 3356J
W-4		"	1	3350, 3354, 3356J
W-5		"	1	All
W-6		"	1	3350, 3354, 3356J
W-7		"	1	3350, 3354, 3356J
W 8		"	1	All
W-9		"	1	All
W-10		"	1	All
W-11		"	1	3350, 3354, 3356J
W-12		"	1	All
W-13		"	1	All
W 14		"	1	All
W-15		"	1	3340, 3344, 3346J
W-16		"	1	3340, 3344, 3346J
W-17		"	1	3340, 3344, 3346J
W 18		"	1	3340, 3344, 3346J
W 19		"	1	3340, 3344, 3346J
W-20		"	1	3340, 3344, 3346J
W-21		"	1	3340, 3344, 3346J
W-22		"	1	3340, 3344, 3346J
W-25		"	1	3340, 3344, 3346J
Z-1	45161-P001	PRE-AMPLIFIER(TDA1054)	1	All
Z-2	45162-P001	POWER AMPLIFIER (TCA940E)	1	All
Z-3	44295-P001	QUAD AMPLIFIER (LM 3900)	1	All
Z-4	44295-P001	QUAD AMPLIFIER (LM 3900)	1	3350, 3354, 3356J
Z-5	45591-P001	NOR GATE (CD 4001BCN)	1	All
Z-6	45593-P001	NAND GATE (CD4011BCN)	1	All
Z-7	45592-P001	NOR GATE (CD4002BE)	1	3350, 3354, 3356J
Z-8	45956-P001	HEX INVERTER (CD4069BCN)	1	All
Z-9	45594-P001	NAND GATE (CD 4023BCN)	1	All
Z-10	45972-P001	VOLTAGE REGULATOR (LM78L15ACZ)	1	All

NOTE: Jumpers 22AWG

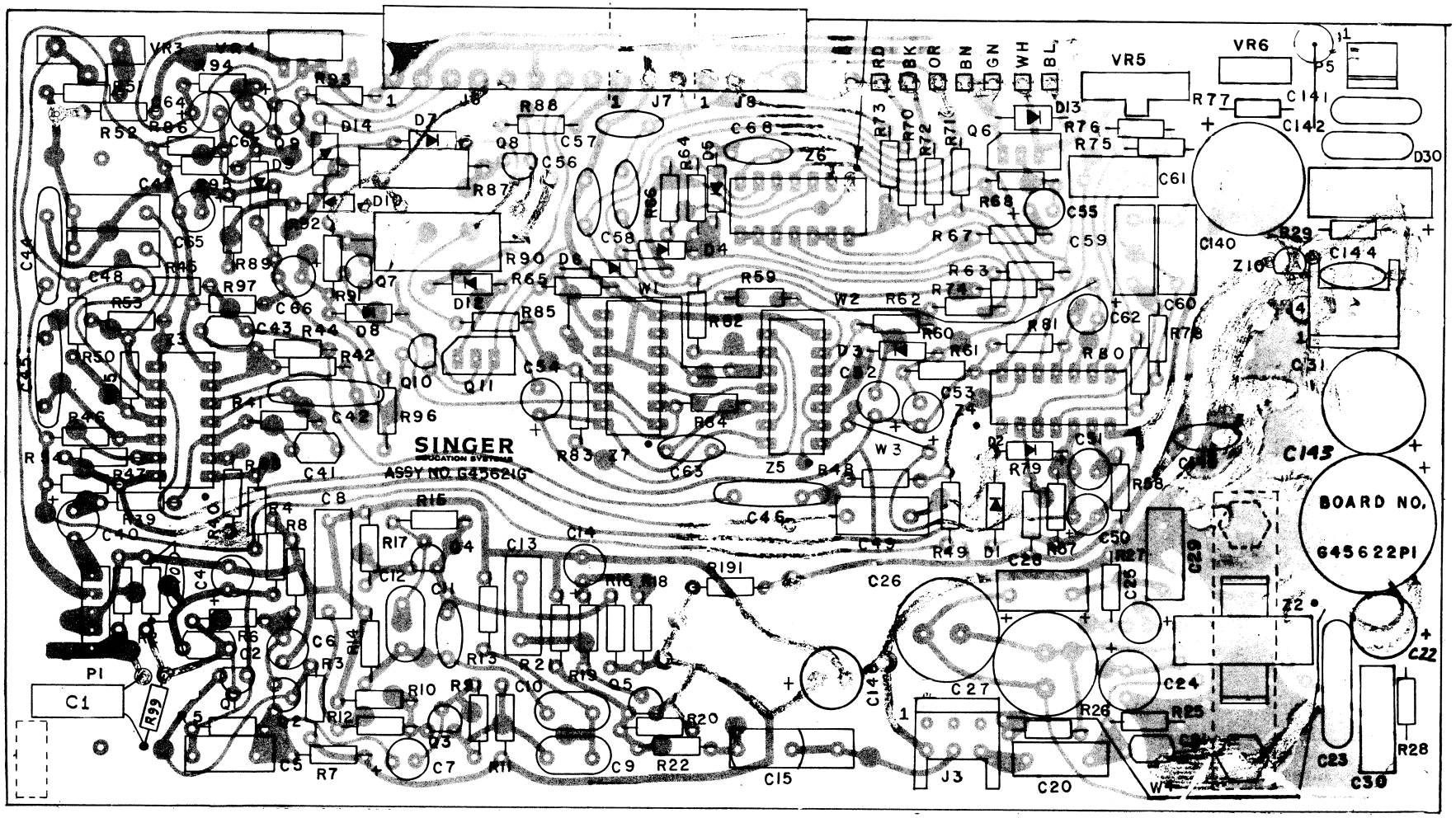

Figure 18. CIRCUIT BOARD COMPLETE (Play Only)

Prior to Code J9K

FIG. & INDEX NO.	PART NUMBER	DESCRIPTION Prior to Code J9K	QTY	MODELS USED ON
18-	45621-G1	CIRCUIT BOARD ASSY. (P) SP	REF	3330, 3334, 3336J
	45621-G2	CIRCUIT BOARD ASSY. (P)	REF	3320, 3324, 3326J
C-1	450-1R0-50M	CAPACITOR 1 mfd ±20%, 50V	1	All
C-2	415A-181K-H	180 pf ± 10%, 50V	1	All
C-4	450-R22-50M	.22 mfd ± 20%, 50V	1	All
C-5	42756-P12	.0056 mfd ± 10%, 100V	1	All
C-6	42267-P3	4.7 mfd ± 20%, 25V	1	All
C-7	42267-P10	1 mfd , 16V	1	All
C-8	42756-P11	.1 mfd ± 10%, 100V	1	All
C-9	415B-P472K-C	4700 pf ± 10%	1	All
C-10	415B-P472K-C	4700 pf, ± 10%	1	All
C-11	415B-P472K-C	4700 pf, ± 10%	1	All
C-12	415B-P472K-C	4700 pf, ± 10%	1	All
C-13	45147-P2	.0033 uf ± 10%, 100V	1	All
C-14	42267-P10	1 mfd , 16V	1	All
C-15	38339-P19	.1 mfd ± 20%, 16V	1	All
C-20	45147-P3	.0047 pf ± 10%, 100V	1	All
C-21	415A-750K-H	75 pf ± 10%, 50V	1	All
C-22	42267-P15	100 mfd, 25V	1	All
C-23	415C-P104M-F	.1 mfd ± 20%, 25V	1	All
C-24	42267-P14	47 mfd , 16V	1	All
C-25	44030-P9	10 mfd, 16 V	1	All
C-26	44030-P11	470 mfd, 16V	1	All
C-27	44030-P11	470 mfd, 16V	1	All
C-28	42756-P14	.001 mfd ± 10%, 100V	1	All
C-29	45147-P3	.0047 pf ± 10%, 100V	1	All
C-30	42756-P11	.1 mfd ± 10%, 100V	1	All
C-31	44030-P11	470 mfd, 16V	1	All
C-40	42267-P10	1 mfd, 16V	1	All
C-41	415B-P222K-J	2200 pf ± 10%, 100V	1	3330, 3334, 3336J
	415B-R102K-D	.001 uf ± 10%, 50V	1	3320, 3324, 3326J
C-42	38339-P20	.22 mfd, 16V	1	All
C-43	415A-181K-K	180 pf ± 10%, 50V	1	All
C-44	38339-P20	.22 mfd , 16V	1	All
C-45	38339-P20	.22 mfd , 16V	1	All
C-46	38339-P20	.22 mfd , 16V	1	3330, 3334, 3336J
C-47	42756-P10	.0068 mfd ± 10%, 100V	1	All
C-48	42756-P10	.0068 mfd ± 10%, 100V	1	All
C-49	45147-P3	.0068 mfd ± 10%, 100V	1	3330, 3334, 3336J
C-50	450-1R0-50M	1 mfd ± 20%, 50V	1	3320, 3324, 3326J
C-51	450-R47-50M	.47 mfd ± 20%, 50V	1	3330, 3334, 3336J
C-52	44267-P10	1 mfd, 16V	1	All
C-53	42267-P3	4.7 mfd ± 20%, 25V	1	All
C-54	42267-P10	1 mfd, 16V	1	All
C-55	450-1R0-50M	1 mfd ± 20%, 50V	1	All
C-56	415B-P222K-J	2200 pf. ± 10%, 100V	1	All
C-57	415B-P222K-J	2200 pf ± 10%, 100V	1	3330, 3334, 3336J
C-58	38339-P19	1 mfd ± 20%, 16V	1	3330. 3334, 3336J
C-59	42756-P15	.047 mfd ± 10%, 100V	1	3330, 3334, 3336J
C-60	42756-P15	.047 mfd ± 10%, 100V	1	3330, 3334, 3336J
C-61	42756-P13	.033 mfd ± 10%, 100V	1	3330, 3334, 3336J
C-62	450-R47-50M	.47 mfd ± 20%, 50V	1	3330, 3334, 3336J
C-63	38339-P19	.1 mfd ± 20%, 16V	1	3330, 3334, 3336J
C-64	42267-P18	2.2 mfd, 25V	1	3330, 3334, 3336J
C-65	44030-P9	10 mfd , 16V	1	3330, 3334, 3336J
C-66	450-22R-10M	22 mfd ± 20%, 10V	1	All
C-67	44030-P9	10 mfd, 16V	1	All
C-68	415B-P222K-J	2200 pf ± 10%, 100V	1	All
C-69	415B-R102K-D	.001 pf ± 10%, 50V	1	3330, 3334, 3336J
C-70	415B-P331K-H	33 pf ± 10%, 50V	1	All
C-72	42756-P9	.01 mfd ± 10%	1	3320, 3324, 3326J
C-75	415B-P102K-H	.001 mfd ±10%, 50V	1	All
C-77	415B-P102K-H	CAPACITOR .001 mfd ±10%, 50V	1	All

CARAMATE 3300

FIG. & INDEX NO.	PART NUMBER	DESCRIPTION	QTY	MODELS USED ON
C-140	42267-P011	Capacitor, 470 mfd, 25V	1	All
C-141	415J-P473K-H	" 47K pf±10%, 50V	1	All
C-142	415J-P473K-H	" 47K pf±10%, 50V	1	All
C-143	42267P-13	" 2200 mfd, 25V	1	All
C-144	415J-P473K-H	" 47K pf±10%, 50V	1	All
C-145	415J-P473K-H	" 47K pf±10%, 50V	1	All
C-146	42267-P014	" 47 mfd, 16V	1	All
D-1	44522-P002	Diode (IN3064)	1	3320, 3324, 3326J
D-2	44522-P002	" (IN3064)	1	3320, 3324, 3326J
D-3	44522-P002	" (IN3064)	1	All
D-4	44522-P002	" (IN3064)	1	All
D-5	44522-P002	" (IN3064)	1	All
D-6	44522-P002	" (IN3064)	1	All
D-7	44522-P002	" (IN3064)	1	3330, 3334, 3336J
D-9	44522-P002	" (IN3064)	1	All
D-10	44522-P002	" (IN3064)	1	3330, 3334, 3336J
D-12	40875-P001	" (IN 4003)	1	All
D-13	40875-P001	" (IN 4003)	1	All
D-14	40875-P001	" (IN 4003)	1	3330, 3334, 3336J
D-30	39324-P005	" Bridge	1	All
J-3	44507-P006	Connector	1	All
J-4	44553-P005	"	1	All
J-6	45629-P002	"	1	All
J-7	45629-P002	"	1	All
J-8	45629-P002	"	1	All
P-1	44511-P004	"	1	All
P-5	45649-P001	"	1	All
Q-1	42721-P001	Transistor (MPS6514)	1	All
Q-2	42721-P001	" (MPS6514)	1	All
Q-3	42721-P001	" (MPS6514)	1	All
Q-4	42721-P001	" (MPS6514)	1	All
Q-5	42721-P001	" (MPS6514)	1	All
Q-6	44518-P001	" (D40C1)	1	All
Q-7	44294-P001	" (2N4400)	1	3330, 3334, 3336J
Q-8	44519-P001	" (MPS A13)	1	3330, 3334, 3336J
	44294-P001	" (2N4400)	1	3320, 3324, 3326J
Q-9	42721-P001	" (MPS 6514)	1	All
Q-10	44294-P001	" (2N4400)	1	All
Q-11	44518-P001	" (D40C1)	1	All
R-1	406-154-3	Resistor 150K ohm	1	All
R-2	406-224-3	" 220K ohm	1	All
R-3	406-224-3	" 220K ohm	1	All
R-4	406-681-3	" 680 ohm	1	All
R-5	406-564-3	" 560K ohm	1	All
R-6	406-473-3	" 47K ohm	1	All
R-7	406-103-3	" 10K ohm	1	All
R-8	406-681-3	" 680 ohm	1	All
R-9	406-155-3	" 1.5M ohm	1	All
R-10	406-331-3	" 330 ohm	1	All
R-11	406-103-3	" 10K ohm	1	All
R-12	406-101-3	" 100 ohm	1	All
R-13	406-184-3	" 180K ohm	1	All
R-14	406-223-3	" 22K ohm	1	All
R-15	406-155-3	" 1.5M ohm	1	All
R-16	406-393-3	" 39K ohm	1	All
R-17	406-331-3	" 330 ohm	1	All
R-18	406-474-3	" 470K ohm	1	All
R-19	406-474-3	" 470K ohm	1	All
R-20	406-473-3	" 47K ohm	1	All

Note: All resistors ±5% ¼W except as stated.

FIG. & INDEX NO.	PART NUMBER	DESCRIPTION	QTY	MODELS USED ON
R-21	406-103-3	Resistor 10K ohm	1	All
R-22	406-223-3	2.2 ohm	1	All
R-25	406-224-3	220K ohm	1	All
R-26	406-101-3	100 ohm	1	All
R-27	406-330-3	33 ohm	1	All
R-28	406-109-3	1 ohm	1	All
R-29	406-101-3	100 ohm	1	All
R-30	406-104-3	100K ohm	1	3320, 3324, 3326J
R-31	406-474-3	220K ohm	1	3330, 3334, 3336J
R-39	406-332-3	3.300 ohm	1	3330, 3334, 3336J
	406-472-3	4,700 ohm	1	3320, 3224, 3326J
R-40	406-474-3	470K ohm	1	All
R-41	406-394-3	390K ohm	1	All
R-42	406-183-3	18K ohm	1	All
R-43	406-474-3	470K ohm	1	All
R-44	406-394-3	390K ohm	1	All
R-45	406-273-3	27K ohm	1	3330, 3334, 3336J
	406-153-3	15K ohm	1	3320, 3324, 3326J
R-46	406-184-3	180K ohm	1	All
R-47	406-683-3	68K ohm	1	3330, 3334, 3336J
	406-224-3	220K ohm	1	3320, 3324, 3326J
R-48	406-153-3	15K ohm	1	3330, 3334, 3336J
R-49	406-184-3	180K ohm	1	3330, 3334, 3336J
R-50	406-334-3	330K ohm	1	All
R-51	406-563-3	56K ohm	1	All
R-52	406-472-3	4700 ohm	1	All
R-53	406-104-3	100K ohm	1	All
R-54	406-224-3	220K ohm	1	All
R-55	406-334-3	330K ohm	1	3330, 3334, 3336J
	406-105-3	1M ohm	1	3320, 3324, 3326J
R-57	406-125-3	1.2M ohm	1	3320, 3324, 3326J
R-58	406-105-3	1M ohm	1	3330, 3334, 3336J
R-59	406-223-3	22K ohm	1	All
R-60	406-333-3	33K ohm	1	All
R-61	406-823-3	82K ohm	1	All
R-62	406-223-3	22K ohm	1	All
R-63	406-473-3	47K ohm	1	All
R-64	406-224-3	22K ohm	1	All
R-65	406-473-3	47K ohm	1	All
R-66	406-223-3	22K ohm	1	All
R-67	406-223-3	22K ohm	1	All
R-68	406-473-3	47K ohm	1	All
R-70	406-103-3	10K ohm	1	All
R-71	406-103-3	10K ohm	1	All
R-72	406-103-3	10K ohm	1	All
R-73	406-103-3	10K ohm	1	3330, 3334, 3336J
R-74	406-223-3	22K ohm	1	3330, 3334, 3336J
R-75	406-334-3	330K ohm	1	3330, 3334, 3336J
R-76	406-563-3	56K ohm	1	3330, 3334, 3336J
R-77	406-472-3	4,700 ohm	1	3330, 3334, 3336J
R-78	406-104-3	100K ohm	1	3330, 3334, 3336J
R-79	406-224-3	220K ohm	1	3330, 3334, 3336J
R-80	406-334-3	330K ohm	1	3330, 3334, 3336J
R-81	406-105-3	1M ohm	1	3330, 3334, 3336J
R-82	406-223-3	22K ohm	1	3330, 3334, 3336J
R-83	406-473-3	47K ohm	1	3330, 3334, 3336J
R-84	406-473-3	47K ohm	1	3330, 3334, 3336J
R-85	406-102-3	1K ohm	1	3330, 3334, 3336J
R-86	406-103-3	10K ohm	1	3330, 3334, 3336J
R-87	408-270	RESISTOR 27 ohm 5%, 1W	1	3330, 3334, 3336J

NOTE: All Resistors ±5%, ¼ watt except as stated

FIG. & INDEX NO.	PART NUMBER	DESCRIPTION	QTY	MODELS USED ON
R-88	406-122-3	RESISTOR 1200 ohm	1	3330, 3334, 3336J
R-89	406-681-3	680 ohm	1	3330, 3334, 3336J
R-90	409 150	15 ohm±5%, 2 watt	1	All
R-91	406-223-3	22K ohm	1	All
R-92	406-473-3	47K ohm	1	3330, 3334, 3336J
R-93	406-104-3	10K ohm	1	All
R-94	406-103-3	10K ohm	1	All
R-95	406-103-3	10K ohm	1	All
R-96	406-104-3	100K ohm	1	All
R-97	406-103-3	10K ohm	1	All
R-98	406-472-3	4700 ohm	1	All
R-99	406-102-3	1K ohm	1	All
R-100	409-390	39 ohm±5%, 2 watt	1	All
R-191	406-101-3	100 ohm	1	All
R-195	406-122-3	1200 ohm	1	3320, 3324, 3326J
R-196	406-182-3	22 ohm±5%, ½ watt	1	3320, 3324, 3326J
R-197	402-22-0-3	22 ohm±5%, ½ watt	1	3320, 3324, 3326J
R-198	408-121	RESISTOR 120 ohm±5%, 1 watt	1	3320, 3324, 3326J
VR-3	40761-P008	POTENTIOMETER (50K)	1	All
VR-4	46039-P002	POTENTIOMETER (2K)	1	All
VR-5	40761-P008	POTENTIOMETER (50K)	1	3330, 3334, 3336J
VR-6	46039-P002	POTENTIOMETER (2K)	1	3330, 3334, 3336J
W-1		JUMPER.	1	3330, 3334, 3336J
W-2			1	3330, 3334, 3336J
W-3			1	All
W-4			1	All
W-5			1	3320, 3324, 3326J
W-6			1	3320, 3324, 3326J
W-7		JUMPER	1	3320, 3324, 3326J
Z-2	45162-P001	POWER AMPLIFIER (TCA 940 E)	1	All
Z-3	44295-P001	QUAD AMPLIFIER (LM 3900)	1	All
Z-4	44295-P001	QUAD AMPLIFIER (LM 3900)	1	3330, 3334, 3336J
Z-5	45591-P001	NOR GATE (CD 4001 BCN)	1	All
Z-6	45593-P001	NAND GATE (CD 4011 BCN)	1	All
Z-7	45592-P001	NOR GATE (CD 4002 BE)	1	3330, 3334, 3336J
Z-10	45972-P001	REGULATOR (LM 7815 ACZ)	1	All
	45588-P001	HEAT SINK	1	All
	148-8-6H	SCREW, Thread Forming No. 8 x 3/8 Hex hd	1	All

NOTE: All Jumpers 22AWG

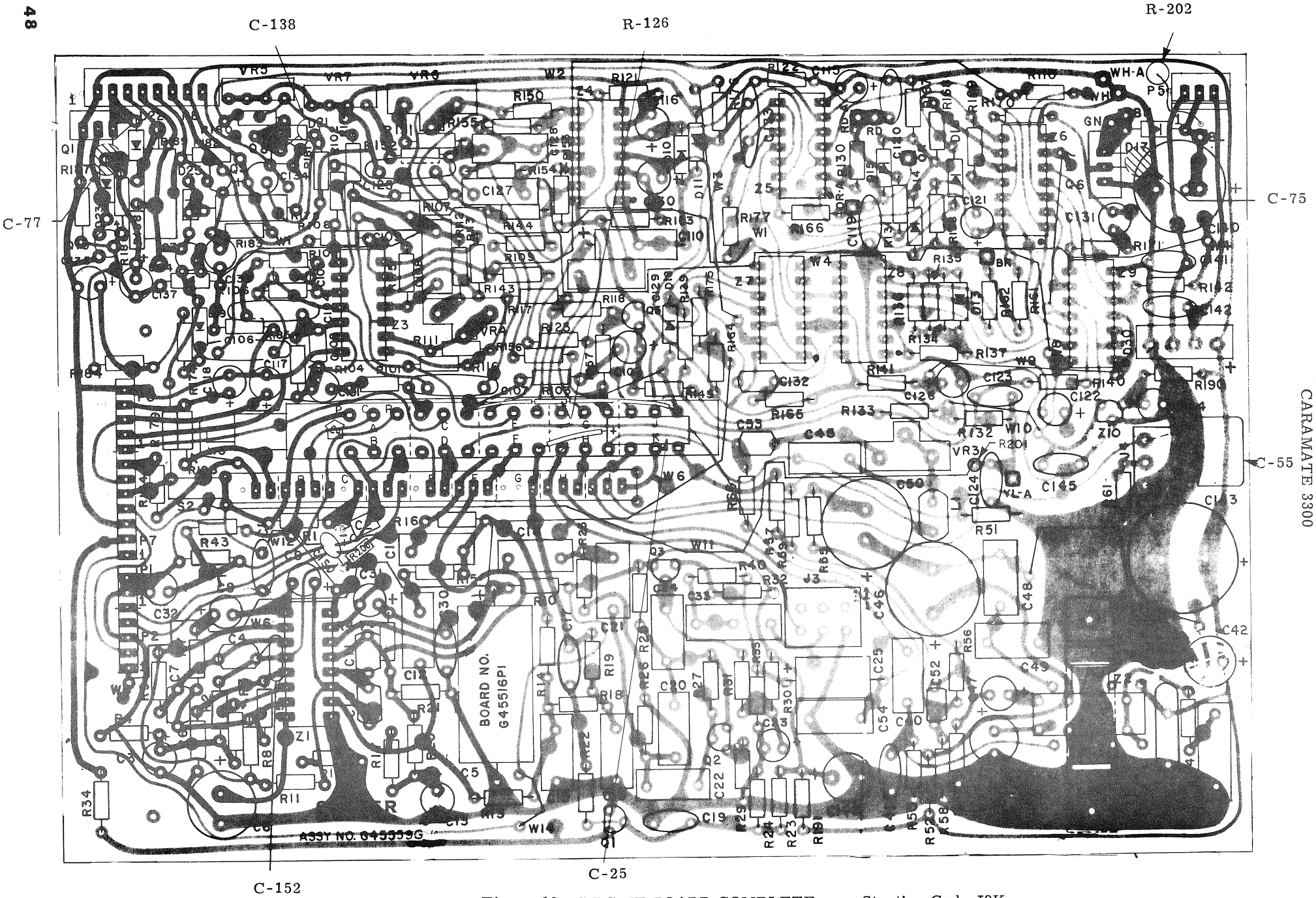

Figure 19. CIRCUIT BOARD COMPLETE Starting Code J9K

FIG. & INDEX NO.	PART NUMBER	Starting Code J9K DESCRIPTION Rev Y	QTY	MODELS USED ON
19-	45559-G3	CIRCUIT BOARD ASSEMBLY (P/R) SP.	REF	3350, 3354, 3356J
	45559-G4	CIRCUIT BOARD ASSEMBLY (P/R)	REF	3340, 3344, 3346J
C-1	415J-P473K-H	CAPACITOR 47K pf ±10%	1	All
C-2	450-R47-50M	.47 uf ±20%, 50V	1	All
C-3	450-R22-50M	.22 uf ±20%, 50V	1	All
C-4	415A-R470K-C	47 pf ±10%	1	All
C-5	42267-P19	470 uf, 16V	1	All
C-6	42267-P9	220 uf, 16V	1	All
C-7	415B-P102K-D	1K uf ±10%	1	All
C-8	450-R47-50M	.47 uf ±20%	1	All
C-9	450-R22-50M	.22 uf ±20%	1	All
C-10	415A-R470K-C	47 pf ±10%	1	All
C-11	415A-R470K-C	47 pf ±10%	1	All
C-12	45147-P1	.0022 uf ±10%, 100V	1	All
C-13	42267-P14	47 uf , 16V	1	All
C-14	42756-P13	.033 uf ±10%, 100V	1	All
C-15	42756-P8	.022 uf ±10%, 100V	1	All
C-16	42756-P9	.01 uf ±10%	1	All
C-17	38339-P19	.1 mfd ±20%, 16V	1	All
C-18	42756-P13	.033 uf ±10%, 100V	1	All
C-19	38339-P19	.1 mfd ±20%, 16V	1	All
C-20	45147-P3	.0047 uf ±10%, 100V	1	All
C-21	42756-P9	.01 uf ±10%	1	All
C-22	45147-P3	.0047 uf ±10%, 100V	1	All
C-23	42267-P10	1 uf, 16V	1	All
C-24	45147-P2	.0033 uf ±10%, 100V	1	All
C-25	44030-P15	1 mfd ±20%	1	All
C-31	42267-P18	2.2 uf, 25V	1	All
C-32	450-22R-10M	22 uf ±20%, 10V	1	All
C-33	42756-P11	.1 uf ±10%, 100V	1	All
C-40	45147-P3	.0047 uf ±10%, 100V	1	All
C-41	415A-P750K-H	75 pf ±10%	1	All
C-42	42267-P15	100 mfd, 25V	1	All
C-43	415C-P104M-F	100 pf ±20%	1	All
C-44	44030-P9	10 mfd, 16V	1	All
C-45	42756-P10	.01 uf ±10%	1	All
C-46	44030-P11	470 mfd.	1	All
C-47	42267-P18	2.2 mfd, 25V	1	All
C-50	44030-P11	470 mfd.	1	All
C-51	42756-P11	.1 uf ±10%, 100V	1	All
C-53	415B-P331K-H	330 pf ±10%	1	All
C-54	45147-P1	.0022 pf ±10%, 100V	1	All
C-55	42756-P11	.1 uf ±10%, 100V	1	All
C-75	415B-P102K-H	1K uf ±10%	1	All
C-77	415B-P102K-H	1K uf ±10%	1	All
C-101	42267-P10	1 uf, 16V	1	All
C-102	415B-P222K-J	2200 pf ±10%	1	3350, 3354, 3356J
	415A-P181K-H	180 pf ±10%	1	3340, 3344, 3346J
C-103	44030-P9	10 mfd	1	All
C-104	38339-P20	.22 mfd, 16V	1	All
C-105	415A-P181K-H	180 pf ±10%	1	All
C-106	39339-P20	.22 mfd, 16V	1	All
C-107	39339-P20	.22 mfd, 16V	1	3350, 3354, 3356J
C-108	42756-P10	.0068 uf ±10%, 100V	1	All
C-109	42756-P10	.0068 uf ±10%, 100V	1	All
C-110	42756-P10	.0068 uf ±10%, 100V	1	3350, 3354, 3356J
C-112	42756-P9	.01 uf ±10%	1	3340, 3344, 3346J
C-115	450-1R0-50M	1 uf, ±20%, 50V	1	3340, 3344, 3346J
C-116	450-R47-50M	.47 uf ±20%, 50V	1	3350, 3354, 3356J
C-117	42267-P6	.01 uf ±10%	1	All
C-118	42267-P6	.01 uf ±10%	1	All
C-119	415B-P222K-J	2200 uf ±10%	1	All
C-120	415B-P222K-J	2200 uf ±10%	1	All
C-121	42267-P10	CAPACITOR 1 uf, 16V	1	All

CARAMATE 3300

FIG. & INDEX NO.	PART NUMBER	DESCRIPTION (Starting Code J9K Rev Y)	QTY	MODELS USED ON
C-122	450-4R7-25M	CAPACITOR 4.7 uf ±20%, 25V	1	All
C-123	38339-P19	.1 mfd ±20%	1	3350, 3354, 3356J
C-124	415B-P222K-J	2200 uf ±10%	1	3350, 3354, 3356J
C-125	38339-P20	.22 mfd, 16V	1	All
C-126	42267-P10	1 uf, 16V	1	All
C-127	42756-P15	.047 uf ±10%, 100V	1	All
C-128	42756-P15	.047 uf ±10%, 100V	1	All
C-129	42756-P15	.047 uf ±10%, 100V	1	3350, 3354, 3356J
C-130	450-R47-50M	.47 uf ±20%, 50V	1	3350, 3354, 3356J
C-131	450-1R0-50M	1 uf ±20%, 50V	1	All
C-132	38339-P19	.1 mfd ±20%, 16V	1	3350, 3354, 3356J
C-133	38339-P19	.1 mfd ±20%, 16V	1	3350, 3354, 3356J
C-134	42267-P18	2.2 uf, 25V	1	3350, 3354, 3356J
C-135	44030-P9	10 mfd	1	3350, 3354, 3356J
C-136	44030-P9	10 mfd	1	All
C-137	450-22R-10V	22 uf ±20%, 10V	1	3350, 3354, 3356J
C-138	415B-P102K-D	1K uf ±10%	1	3350, 3354, 3356J
C-140	42267-P11	470 uf, 25V	1	All
C-141	415J-P473K-H	47000 pf ±10%	1	All
C-142	415J-P473K-H	47000 pf ±10%	1	All
C-143	42267-P13	2200 uf, 25V	1	All
C-144	450-4R7-25M	4.7 uf ±20%, 25V	1	All
C-145	415J-P473K-H	47K pf ±10%	1	All
C-146	42267-P14	47 uf, 16V	1	All
C-150	415B-P331K-H	330 pf ±10%	1	All
C-152	415A-P181K-H	CAPACITOR 180 pf ±10%, 100V	1	All
D-10	44522-P2	DIODE (IN3064)	1	3340, 3344, 3346J
D-11	44522-P2	(IN3064)	1	3340, 3344, 3346J
D-13	44522-P2	(IN3064)	1	All
D-14	44522-P2	(IN3064)	1	All
D-15	44522-P2	(IN3064)	1	All
D-16	44522-P2	(IN3064)	1	All
D-17	40875-P1	(IN 4003)	1	All
D-18	44522-P2	(IN3064)	1	3350, 3354, 3356J
D-19	44522-P2	(IN3064)	1	3350, 3354, 3356J
D-21	44522-P2	(IN3064)	1	3350, 3354, 3356J
D-22	40875-P1	(IN 4003)	1	All
D-24	44522-P2	(IN3064)	1	All
D-25	40875-P1	(IN 4003)	1	3350, 3354, 3356J
D-30	39324-P5	DIODE, Bridge	1	All
J-3	44507-P6	CONNECTOR	1	All
J-4	44553-P5	CONNECTOR	1	All
L-1	45596-P1	INDUCTOR (RC 875 Pace Elect., Ontario N.Y.)	1	All
P-1	444-NP-07	CONNECTOR	1	All
P-2	444-NP-07		1	All
P-5	443-FL-03		1	All
P-6	444-NP-12		1	All
P-7	444-NP-12		1	All
P-8	443-FL-08	CONNECTOR	1	All
Q-1	42721-P1	TRANSISTOR (MPS 6514)	1	All
Q-2	42721-P1	(MPS 6514)	1	All
Q-3	42721-P1	(MPS 6514)	1	All
Q-5	44294-P1	(2N4400)	1	All
Q-6	44518-P1	(D40C1)	1	All
Q-7	44294-P1	(2N4400)	1	3350, 3354, 3356J
Q-8	44519-P1	(MPS-A13)	1	3350, 3354, 3356J
	44294-P1	(2N-4400)	1	3340, 3344, 3346J
Q-9	42721-P1	(MPS 6514)	1	All
Q-10	44294-P1	(2N 4400)	1	All
Q-11	44518-P1	TRANSISTOR (D40C1)	1	All

CARAMATE 3300

FIG. & INDEX NO.	PART NUMBER	Starting Code J9K DESCRIPTION Rev Y	QTY	MODELS USED ON
R-1	406-184-3	RESISTOR 180K ohm	1	All
R-2	406-473-3	" 47K ohm	1	All
R-3	406-151-3	" 150 ohm	1	All
R-4	406-821-3	" 820 ohm	1	All
R-5	406-562-3	" 5,600 ohm	1	All
R-6	406-181-3	" 180 ohm	1	All
R-7	406-223-3	" 22K ohm	1	All
R-8	406-332-3	" 3,300 ohm	1	All
R-9	406-124-3	" 120K ohm	1	All
R-10	406-181-3	" 180 ohm	1	All
R-11	406-104-3	" 100K ohm	1	All
R-12	406-104-3	" 100 K ohm	1	All
R-13	406-182-3	" 1,800 ohm	1	All
R-14	406-222-3	" 2,200 ohm	1	All
R-15	406-391-3	" 390 ohm	1	All
R-16	406-154-3	" 150 K ohm	1	All
R-17	406-221-3	" 220 ohm	1	All
R-18	406-751-3	" 750 ohm	1	All
R-19	406-433-3	" 43 K ohm	1	All
R-20	406-822-3	" 8,200 ohm	1	All
R-21	406-271-3	" 270 ohm	1	All
R-22	406-102-3	" 1 K ohm	1	All
R-23	406-334-3	" 330K ohm	1	All
R-24	406-103-3	" 10 K ohm	1	All
R-25	406-473-3	" 47 K ohm	1	All
R-26	406-153-3	" 15K ohm	1	All
R-27	406-155-3	" 1M ohm	1	All
R-28	406-393-3	" 39 K ohm	1	All
R-29	406-331-3	" 330 ohm	1	All
R-30	406-474-3	" 470 K ohm	1	All
R-31	406-474-3	" 470 K ohm	1	All
R-32	406-473-3	" 47 K ohm	1	All
R-33	406-103-3	" 10 K ohm	1	All
R-34.	406-391-3	" 390 ohm	1	All
R-40	406-182-3	" 1,800 ohm	1	All
R-42	406-105-3	" 1M ohm	1	All
R-43	406-104-3	" 100 K ohm	1	All
R-44	406-562-3	" 5,600 ohm	1	All
R-51	406-279-3	" 2.7 ohm	1	All
R-53	406-479-3	" 4.7 ohm	1	All
R-54	406-109-3	" 1 ohm	1	All
R-55	406-331-3	" 330 ohm	1	All
R-57	406-759-3	" 15 ohm	1	All
R-60	406-153-3	" 15 K ohm	1	All
R-61	406-101-3	" 100 ohm	1	All
R-101	406-332-3	" 3,300 ohm	1	3350, 3354, 3356J
	406-472-3	" 4700 ohm	1	3340, 3344, 3346J
R-102	406-105-3	" 1M ohm	1	All
R-103	406-183-3	" 18 K ohm	1	3350, 3354, 3356J
	406-333-3	" 33 K ohm	1	3340, 3344, 3346J
R-104	406-394-3	" 390 K ohm	1	All
R-105	406-183-3	RESISTOR 18 K ohm	1	All
R-106	406-394-3	" 390 K ohm	1	All
R-107	406-394-3	" 390 K ohm	1	All
R-108	406-273-3	" 27 K ohm	1	3350, 3354, 3356J
	406-153-3	" 15 K ohm	1	3340, 3344, 3346J
R-109	406-153-3	" 15 K ohm	1	3350, 3354, 3356J
R-110	406-184-3	" 180 K ohm	1	3340, 3344, 3346J
R-111	406-334-3	" 330 K ohm	1	All
R-112	406-563-3	" 56 K ohm	1	All
R-113	406-224-3	" 220 K ohm	1	All
R-114	406-472-3	" 4,700 ohm	1	All

NOTE ALL RESISTORS ± 5% ¼ watt

FIG. & INDEX NO.	PART NUMBER	Starting Code J9K DESCRIPTION Rev Y	QTY	MODELS USED ON
R-115	406-104-3	. " 100 K ohm	1	All
R-116	406-334-3	. " 330 K ohm	1	3350, 3354, 3356J
	406-105-3	. " 1M ohm	1	3340, 3344, 3346J
R-117	406-184-3	. " 180 K ohm	1	3350, 3354, 3356J
	406-124-3	. " 120 K ohm	1	3340, 3344, 3346J
R-118	406-153-3	. " 15 K ohm	1	All
R-120	406-104-3	. " 100K ohm	1	3340, 3344, 3346J
R-121	406-105-3	. " 1,000 K ohm	1	3350, 3354, 3356J
	406-474-3	. " 470K ohm	1	3340, 3344, 3346J
R-122	406-474-3	. " 470K ohm n.	1	3340, 3344, 3346J
R-123	406-683-3	. " 68 K ohm	1	3350, 3354, 3356J
	406-224-3	. " 220 K ohm	1	3340, 3344, 3346J
R-124	406-681-3	. " 680 ohm	1	All
R-125	406-681-3	. " 680 ohm	1	All
R-126	406-683-3	. " 68 K ohm	1	All
R-130	406-223-3	. " 22 K ohm	1	All
R-131	406-103-3	. " 10 K ohm	1	All
R-132	406-103-3	. " 10 K ohm	1	3350, 3354, 3356J
R-133	406-223-3	. " 22 K ohm	1	3350, 3354, 3356J
R-134	406-184-3	. " 180 K ohm	1	All
R-135	406-474-3	. " 470 K ohm	1	All
R-136	406-824-3	. " 820 K ohm	1	All
R-137	406-223-3	. " 22 K ohm	1	All
R-138	406-333-3	. " 33 K ohm	1	All
R-139	406-223-3	. " 22 K ohm	1	3350, 3354, 3356J
R-140	406-223-3	. " 22 K ohm	1	3350, 3354, 3356J
R-141	406-473-3	. " 47 K ohm	1	All
R-142	406-184-3	. " 180 K ohm	1	3350, 3354, 3356J
R-143	406-184-3	. " 180 K ohm	1	All
R-144	406-184-3	. " 180 K ohm	1	3350, 3354, 3356J
R-145	406-271-3	. " 270 ohm	1	All
R-150	406-334-3	. " 330 K ohm	1	3350, 3354, 3356J
R-151	406-563-3	. " 56 K ohm	1	3350, 3354, 3356J
R-152	406-472-3	. " 4,700 ohm	1	3350, 3354, 3356J
R-153	406-224-3	. " 220 K ohm	1	3350, 3354, 3356J
R-154	406-104-3	. " 100 K ohm	1	3350, 3354, 3356J
R-155	406-334-3	. " 330 K ohm	1	3350, 3354, 3356J
R-156	406-184-3	. " 180 K ohm	1	3350, 3354, 3356J
R-157	406-223-3	. " 22 K ohm	1	All
R-161	406-103-3	. " 10 K ohm	1	All
R-162	406-223-3	. " 22 K ohm	1	All
R-163	406-105-3	. " 1 K ohm	1	3350, 3354, 3356J
R-164	406-103-3	. " 10 K ohm	1	3350, 3354, 3356J
R-165	406-224-3	. " 220 K ohm	1	3350, 3354, 3356J
R-166	406-103-3	. " 10 K ohm	1	All
R-167	406-473-3	. " 47 K ohm	1	All
R-168	406-223-3	. " 22 K ohm	1	All
R 169	406-223-3	. " 22 K ohm	1	All
R-170	406-473-3	. " 47 K ohm	1	All
R-171	406-223-3	. RESISTOR 22 K ohm	1	All
R-174	406-681-3	. " 680 ohm	1	3350, 3354, 3356J
R-175	406-223-3	. " 22 K ohm	1	3350, 3354, 3356J
R-176	406-473-3	. " 47 K ohm	1	3350, 3354, 3356J
R-177	406-473-3	. " 47 K ohm	1	3350, 3354, 3356J,
R-178	408-270	. " 27 ohm	1	3350, 3354, 3356J
R-179	406-122-3	. " 1,200 ohm	1	3350, 3354, 3356J
R-180	406-102-3	. " 1 K ohm	1	3350, 3354, 3356J
R-181	406-103-3	. " 10 K ohm	1	3350, 3354, 3356J
R-182	406-104-3	. " 100K ohm	1	All

NOTE: All Resistors ± 5% ¼ watt

FIG. & INDEX NO.	PART NUMBER	Starting Code J9K DESCRIPTION Rev Y	QTY	MODELS USED ON
R 183	406-103-3	RESISTOR 10 K ohm	1	All
R-184	406-473-3	" 47 K ohm	1	3350, 3354, 3356J
	406-124-3	" 120 K ohm	1	3340, 3344, 3346J
R-185	406-103-3	" 10 K ohm	1	All
R-186	406-104-3	" 100 K ohm	1	All
R 187	406-103-3	" 10 K ohm	1	All
R-188	406-223-3	" 22 K ohm	1	All
R-189	409-150	" 15 ohm	1	All
R-190	406-180-3	" 18 ohm	1	All
R-191	406-271-3	" 270 ohm	1	All
R 192	406-472-3	" 4,700 ohm	1	All
R-195	406-122-3	" 1200 ohm	1	3340, 3344, 3346J
R-196	406-182-3	" 1800 ohm	1	3340, 3344, 3346J
R 197	402-22-0-3	" 22 ohm	1	3340, 3344, 3346J
R 198	408-121	" 120 ohm	1	3340, 3344, 3346J
R-200	406-102-3	" 1 K ohm	1	All
R-201	406-102-3	" 1 K ohm	1	3350, 3354, 3356J
R-202	409-390	RESISTOR 39 ohm	1	All
S-1	45160-P2	SWITCH	1	All
S-2	44521-P1	SWITCH	1	All
VR-3	40761-P12	POTENTIOMETER (100 K)	1	All
VR-4	40761-P8	POTENTIOMETER (50 K)	1	All
VR-5	46039-P2	POTENTIOMETER (2 K)	1	All
VR-6	40761-P8	POTENTIOMETER (50K)	1	3350, 3354, 3356J
VR-7	46039-P2	POTENTIOMETER (2 K)	1	3350, 3354, 3356J
W		JUMPER. . 22AWG	1	All
Z-1	45161-P1	PRE-AMPLIFIER(TDA1054)	1	All
Z-2	46410-P1	POWER AMPLIFIER (TDA 1908)	1	All
Z-3	44295-P1	QUAD AMPLIFIER (LM 3900)	1	All
Z-4	44295-P1	QUAD AMPLIFIER (LM 3900)	1	3350, 3354, 3356J
Z-5	45591-P1	NOR GATE (CD 4001BCN)	1	All
Z-6	45593-P1	NAND GATE (CD4011BCN)	1	All
Z-7	45592-P1	NOR GATE (CD4002BE)	1	3350, 3354, 3356J
Z-8	45956-P1	HEX INVERTER (CD4069BCN)	1	All
Z-9	45594-P1	NAND GATE (CD 4023BCN)	1	All
Z-10	45972-P1	VOLTAGE REGULATOR (LM78L15ACZ)	1	All

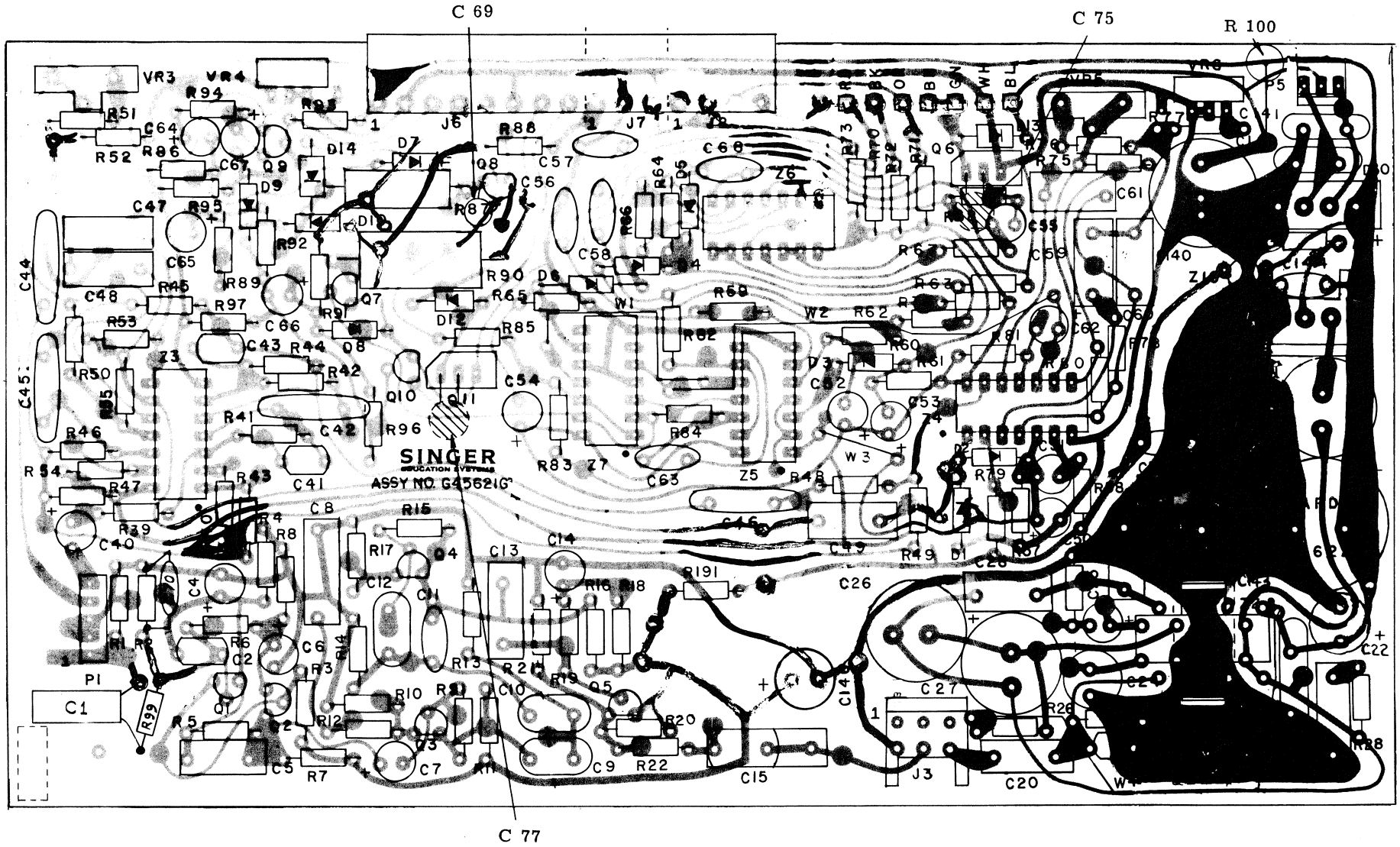

Figure 20. CIRCUIT BOARD CPMPLETE (Play Only) Starting Code J9K

FIG. & INDEX NO.	PART NUMBER	Starting Code J9K DESCRIPTION Rev. T	QTY	MODELS USED ON
20-	45621-G3	CIRCUIT BOARD ASSY. (P) SP	REF	3330, 3334, 3336J
	45621-G4	CIRCUIT BOARD ASSY. (P)	REF	3320, 3324, 3326J
C-1	450-1R0-50M	CAPACITOR 1 mfd ±20%, 50V	1	All
C-2	415A-181K-H	180 pf ± 10%, 50V	1	All
C-4	450-R22-50M	.22 mfd ± 20%, 50V	1	All
C-5	42756-P12	.0056 mfd ± 10%, 100V	1	All
C-6	42267-P3	4.7 mfd ± 20%, 25V	1	All
C-7	42267-P10	1 mfd , 16V	1	All
C-8	42756-P11	.1 mfd ± 10%, 100V	1	All
C-9	415B-P472K-C	4700 pf ± 10%	1	All
C-10	415B-P472K-C	4700 pf, ± 10%	1	All
C-11	415B-P472K-C	4700 pf, ± 10%	1	All
C-12	415B-P472K-C	4700 pf, ± 10%	1	All
C-13	45147-P2	.0033 uf ± 10%, 100V	1	All
C-14	42267-P10	1 mfd , 16V	1	All
C-15	38339-P19	.1 mfd ± 20%, 16V	1	All
C-20	45147-P3	.0047 pf ± 10%, 100V	1	All
C-21	415A-750K-H	75 pf ± 10%, 50V	1	All
C-23	415C-P104M-F	.1 mfd ± 20%, 25V	1	All
C-24	44030-P9	10 mfd, 16V	1	All
C-25	42267-P18	2.2 mfd, 25V	1	All
C-26	44030-P11	470 mfd, 16V	1	All
C-30	42756-P17	.22 mfd ±10%, 100V	1	All
C-31	44030-P11	470 mfd, 16V,	1	All
C-40	42267-P10	1 mfd, 16V	1	All
C-41	415B-P222K-J	2200 pf ± 10%, 100V	1	3330, 3334, 3336J
	415B-R102K-D	180 pf ± 10%, 50V	1	3320, 3324, 3326J
C-42	38339-P20	.22 mfd, 16V	1	All
C-43	415A-181K-K	180 pf ± 10%, 50V	1	All
C-44	38339-P20	.22 mfd , 16V	1	All
C-45	38339-P20	.22 mfd , 16V	1	All
C-46	38339-P20	.22 mfd , 16V	1	3330, 3334, 3336J
C-47	42756-P10	.0068 mfd ± 10%, 100V	1	All
C-48	42756-P10	.0068 mfd ± 10%, 100V	1	All
C-49	45147-P3	.0068 mfd ± 10%, 100V	1	3330, 3334, 3336J
C-50	450-R47-50M	.47 mfd ±20%, 50V	1	3320, 3324, 3326J
C-51	450-R47-50M	.47 mfd ± 20%, 50V	1	3330, 3334, 3336J
C-52	44267-P10	1 mfd, 16V	1	All
C-53	42267-P3	4.7 mfd ± 20%, 25V	1	All
C-54	42267-P10	1 mfd, 16V	1	All
C-55	450-1R0-50M	1 mfd ± 20%, 50V	1	All
C-56	415B-P222K-J	2200 pf. ± 10%, 100V	1	All
C-57	415B-P222K-J	2200 pf ± 10%, 100V	1	3330, 3334, 3336J
C-58	38339-P19	1 mfd ± 20%, 16V	1	3330, 3334, 3336J
C-59	42756-P15	.047 mfd ± 10%, 100V	1	3330, 3334, 3336J
C-60	42756-P15	.047 mfd ± 10%, 100V	1	3330, 3334, 3336J
C-61	42756-P13	.033 mfd ± 10%, 100V	1	3330, 3334, 3336J
C-62	450-R47-50M	.47 mfd ± 20%, 50V	1	3330, 3334, 3336J
C-63	38339-P19	.1 mfd ± 20%, 16V	1	3330, 3334, 3336J
C-64	42267-P18	2.2 mfd, 25V	1	3330, 3334, 3336J
C-65	44030-P9	10 mfd , 16V	1	3330, 3334, 3336J
C-66	450-22R-10M	22 mfd ± 20%, 10V	1	All
C-67	44030-P9	10 mfd, 16V	1	All
C-68	415B-P222K-J	2200 pf ± 10%, 100V	1	All
C-69	415B-R102K-D	180 pf ± 10%, 50V	1	3330, 3334, 3336J
C-70	415B-P331K-H	33 pf ± 10%, 50V	1	All
C-72	42756-P9	.01 mfd ± 10%	1	3320, 3324, 3326J
C-75	415B-P102K-H	.01 mfd ± 10% , 50V	1	All
C-77	415B-P102K-H	CAPACITOR .01 mfd ± 10% , 50V	1	All

CARAMATE 3300

FIG. & INDEX NO.	PART NUMBER	Starting Code J9K DESCRIPTION	QTY	MODELS USED ON
C-140	42267-P011	Capacitor. 470 mfd, 25V	1	All
C-141	415J-P473K-H	" 47K pf±10%, 50V	1	All
C-142	415J-P473K-H	" 47K pf±10%, 50V	1	All
C-143	42267P-13	" 2200 mfd, 25V	1	All
C-144	415J-P473K-H	" 47K pf±10%, 50V	1	All
C-145	415J-P473K-H	" 47K pf±10%, 50V	1	All
C-146	42267-P014	" 47 mfd, 16V	1	All
D-1	44522-P002	Diode (IN3064)	1	3320, 3324, 3326J
D-2	44522-P002	" (IN3064)	1	3320, 3324, 3326J
D-3	44522-P002	" (IN3064)	1	All
D-4	44522-P002	" (IN3064)	1	All
D-5	44522-P002	" (IN3064)	1	All
D-6	44522-P002	" (IN3064)	1	All
D-7	44522-P002	" (IN3064)	1	3330, 3334, 3336J
D-9	44522-P002	" (IN3064)	1	All
D-10	44522-P002	" (IN3064)	1	3330, 3334, 3336J
D-12	40875-P001	" (IN 4003)	1	All
D-13	40875-P001	" (IN 4003)	1	All
D-14	40875-P001	" (IN 4003)	1	3330, 3334, 3336J
D-30	39324-P005	" Bridge	1	All
J-3	44507-P006	Connector	1	All
J-4	44553-P005	"	1	All
J-6	45629-P002	"	1	All
J-7	45629-P002	"	1	All
J-8	45629-P002	"	1	All
P-1	44511-P004	"	1	All
P-5	45649-P001	"	1	All
Q-1	42721-P001	Transistor (MPS6514)	1	All
Q-2	42721-P001	" (MPS6514)	1	All
Q-3	42721-P001	" (MPS6514)	1	All
Q-4	42721-P001	" (MPS6514)	1	All
Q-5	42721-P001	" (MPS6514)	1	All
Q-6	44518-P001	" (D40C1)	1	All
Q-7	44294-P001	" (2N4400)	1	3330, 3334, 3336J
Q-8	44519-P001	" (MPS A13)	1	3330, 3334, 3336J
	44294-P001	" (2N4400)	1	3320, 3324, 3326J
Q-9	42721-P001	" (MPS 6514)	1	All
Q-10	44294-P001	" (2N4400)	1	All
Q-11	44518-P001	" (D40C1)	1	All
R-1	406-154-3	Resistor 150K ohm	1	All
R-2	406-224-3	" 220K ohm	1	All
R-3	406-224-3	" 220K ohm	1	All
R-4	406-681-3	" 680 ohm	1	All
R-5	406-564-3	" 560K ohm	1	All
R-6	406-473-3	" 47K ohm	1	All
R-7	406-103-3	" 10K ohm	1	All
R-8	406-681-3	" 680 ohm	1	All
R-9	406-155-3	" 1.5M ohm	1	All
R-10	406-331-3	" 330 ohm	1	All
R-11	406-103-3	" 10K ohm	1	All
R-12	406-101-3	" 100 ohm	1	All
R-13	406-683-3	" 68K ohm	1	All
R-14	406-223-3	" 22K ohm	1	All
R-15	406-155-3	" 1.5M ohm	1	All
R-16	406-393-3	" 39K ohm	1	All
R-17	406-331-3	" 330 ohm	1	All
R-18	406-474-3	" 470K ohm	1	All
R-19	406-474-3	" 470K ohm	1	All
R-20	406-473-3	RESISTOR 47K ohm	1	All

Note: All resistors ±5% ¼W except as stated.

CARAMATE 3300

FIG. & INDEX NO.	PART NUMBER	Starting Code J9K DESCRIPTION	QTY	MODELS USED ON
R-21	406-103-3	Resistor 10K ohm	1	All
R-22	406-223-3	2.2 ohm	1	All
R-27	406-330-3	33 ohm	1	All
R-28	406-109-3	1 ohm	1	All
R-29	406-101-3	100 ohm	1	All
R-30	406-104-3	100K ohm	1	3320, 3324, 3326J
R-31	406-474-3	220K ohm	1	3320, 3324, 3326J
R-34	406-392-3	3900 ohm	1	All
R-39	406-332-3	3.300 ohm	1	3330, 3334, 3336J
	406-472-3	4,700 ohm	1	3320, 3224, 3326J
R-40	406-474-3	470K ohm	1	All
R-41	406-394-3	390K ohm	1	All
R-42	406-183-3	18K ohm	1	All
R-43	406-474-3	470K ohm	1	All
R-44	406-394-3	390K ohm	1	All
R-45	406-273-3	27K ohm	1	3330, 3334, 3336J
	406-153-3	15K ohm	1	3320, 3324, 3326J
R-46	406-184-3	180K ohm	1	All
R-47	406-683-3	68K ohm	1	3330, 3334, 3336J
	406-224-3	220K ohm	1	3320, 3324, 3326J
R-48	406-153-3	15K ohm	1	3330, 3334, 3336J
R-49	406-184-3	180K ohm	1	3330, 3334, 3336J
R-50	406-334-3	330K ohm	1	All
R-51	406-563-3	56K ohm	1	All
R-52	406-472-3	4700 ohm	1	All
R-53	406-104-3	100K ohm	1	All
R-54	406-224-3	220K ohm	1	All
R-55	406-334-3	330K ohm	1	3330, 3334, 3336J
	406-105-3	1M ohm	1	3320, 3324, 3326J
R-57	406-474-3	470K ohm	1	3320, 3324, 3326J
R-58	406-105-3	1M ohm	1	3330, 3334, 3336J
R-59	406-223-3	22K ohm	1	All
R-60	406-333-3	33K ohm	1	All
R-61	406-823-3	82K ohm	1	All
R-62	406-223-3	22K ohm	1	All
R-63	406-473-3	47K ohm	1	All
R-64	406-223-3	22K ohm	1	All
R-65	406-473-3	47K ohm	1	All
R-66	406-223-3	22K ohm	1	All
R-67	406-223-3	22K ohm	1	All
R-68	406-473-3	47K ohm	1	All
R-70	406-103-3	10K ohm	1	All
R-71	406-103-3	10K ohm	1	All
R-72	406-103-3	10K ohm	1	All
R-73	406-103-3	10K ohm	1	3330, 3334, 3336J
R-74	406-223-3	22K ohm	1	3330, 3334, 3336J
R-75	406-334-3	330K ohm	1	3330, 3334, 3336J
R-76	406-563-3	56K ohm	1	3330, 3334, 3336J
R-77	406-472-3	4,700 ohm	1	3330, 3334, 3336J
R-78	406-104-3	100K ohm	1	3330, 3334, 3336J
R-79	406-224-3	220K ohm	1	3330, 3334, 3336J
R-80	406-334-3	330K ohm	1	3330, 3334, 3336J
R-81	406-105-3	1M ohm	1	3330, 3334, 3336J
R-82	406-223-3	22K ohm	1	3330, 3334, 3336J
R-83	406-473-3	47K ohm	1	3330, 3334, 3336J
R-84	406-473-3	47K ohm	1	3330, 3334, 3336J
R-85	406-102-3	1K ohm	1	3330, 3334, 3336J
R-86	406-103-3	10K ohm	1	3330, 3334, 3336J
R-87	408-270	RESISTOR 27 ohm 5%, 1W	1	3330, 3334, 3336J

NOTE: All Resistors ±5%, ¼watt except as stated

CARAMATE 3300

FIG. & INDEX NO.	PART NUMBER	Starting Code J9K DESCRIPTION	QTY	MODELS USED ON
R-88	406-122-3	RESISTOR 1200 ohm	1	3330, 3334, 3336J
R-89	406-681-3	680 ohm	1	3330, 3334, 3336J
R-90	409 150	15 ohm±5%, 2 watt	1	All
R-91	406-223-3	22K ohm	1	All
R-92	406-473-3	47K ohm	1	3330, 3334, 3336J
R-93	406-104-3	100K ohm	1	All
R-94	406-103-3	10K ohm	1	All
R-95	406-103-3	10K ohm	1	All
R-96	406-104-3	100K ohm	1	All
R-97	406-103-3	10K ohm	1	All
R-98	406-472-3	4700 ohm	1	All
R-99	406-102-3	1K ohm	1	All
R-100	409-390	39 ohm±5%, 2 watt	1	All
R-191	406-101-3	100 ohm	1	All
R-195	406-122-3	1200 ohm	1	3320, 3324, 3326J
R-196	406-182-3	22 ohm±5%, ½ watt	1	3320, 3324, 3326J
R-197	402-22-0-3	22 ohm±5%, ½ watt	1	3320, 3324, 3326J
R-198	408-121	RESISTOR 120 ohm±5%, 1 watt	1	3320, 3324, 3326J
VR-3	40761-P008	POTENTIOMETER (50K)	1	All
VR-4	46039-P002	POTENTIOMETER (2K)	1	All
VR-5	40761-P008	POTENTIOMETER (50K)	1	3330, 3334, 3336J
VR-6	46039-P002	POTENTIOMETER (2K)	1	3330, 3334, 3336J
W-1		JUMPER.	1	3330, 3334, 3336J
W-2			1	3330, 3334, 3336J
W-3			1	All
W-4			1	All
W-5			1	3320, 3324, 3326J
W-6			1	3320, 3324, 3326J
W-7		JUMPER	1	3320, 3324, 3326J
Z-2	46410-P001	POWER AMPLIFIER (TDA 1908)	1	All
Z-3	44295-P001	QUAD AMPLIFIER (LM 3900)	1	All
Z-4	44295-P001	QUAD AMPLIFIER (LM 3900)	1	3330, 3334, 3336J
Z-5	45591-P001	NOR GATE (CD 4001 BCN)	1	All
Z-6	45593-P001	NAND GATE (CD 4011 BCN)	1	All
Z-7	45592-P001	NOR GATE (CD 4002 BE)	1	3330, 3334, 3336J
Z-10	45972-P001	REGULATOR (LM 7815 ACZ)	1	All
	45588-P001	HEAT SINK	1	All
	148-8-6H	SCREW, Thread Forming No. 8 x 3/8 Hex hd	1	All

NOTE: All Jumpers 22AWG

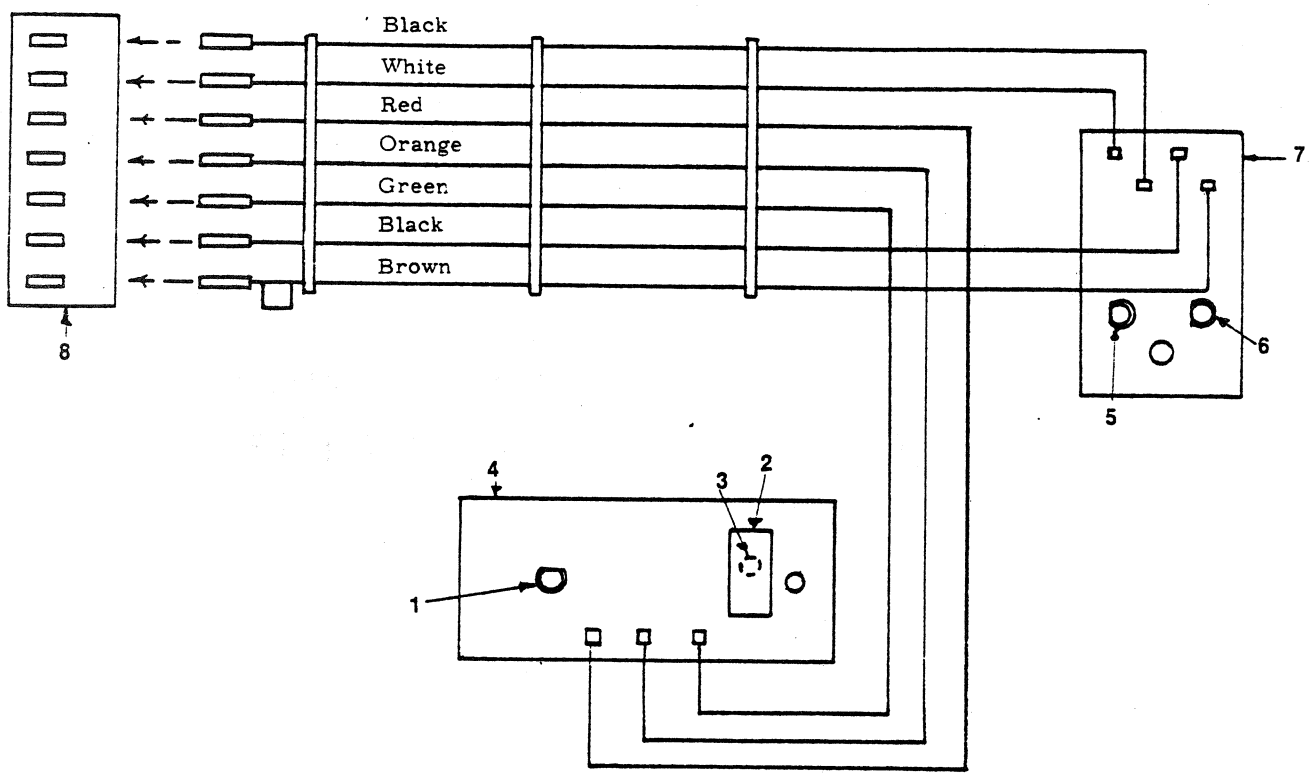

Figure 21. HARNESS ASSY., Record Indicator / SP

FIG. & INDEX NO.	PART NUMBER	DESCRIPTION Rev. D	QTY	MODELS USED ON
21-	45605-G2	RECORD INDICATOR SP HARNESS ASSEMBLY	REF	3350, 3354, 3356J
-1	45948-P1	. LED (Red) D-20	1	All
-2	45164-P1	. SWITCH (S-1)	1	All
-3	45163-P1	. CONTACT.	1	All
-4	45563-P1	. BOARD, Circuit (SP)	1	All
-5	45948-P3	. LED (Green) D-12	1	All
-6	45948-P1	. LED (Red) D-1.	1	All
-7	45561-P1	. BOARD, Circuit Record Indicator	1	All
-8	44512-P8	. . CONNECTOR	1	All

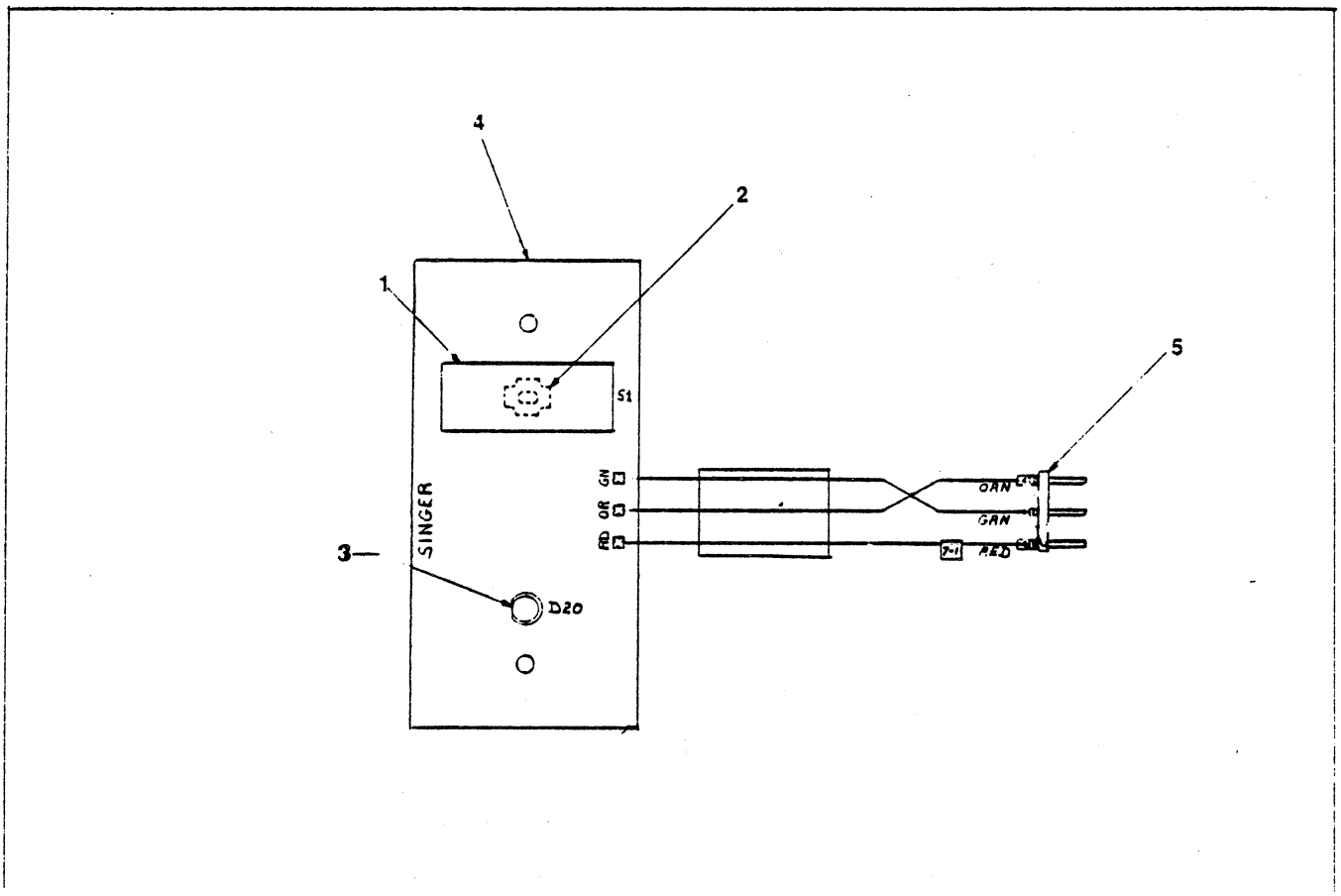

Figure 22. CIRCUIT BOARD COMPLETE

FIG. & INDEX NO.	PART NUMBER	DESCRIPTION Rev. E	QTY	MODELS USED ON
22-	45562-G1	BOARD COMPLETE, Circuit.	REF	3330, 3334, 3336J
-1	45164-P1	. SWITCH	1	All
-2	45163-P1	. CONTACT.	1	All
-3	45948-P1	. LED (Red).	1	All
-4	45563-P1	. BOARD, Circuit	1	All
-5	44552-P2	. CONNECTOR, ...	1	All

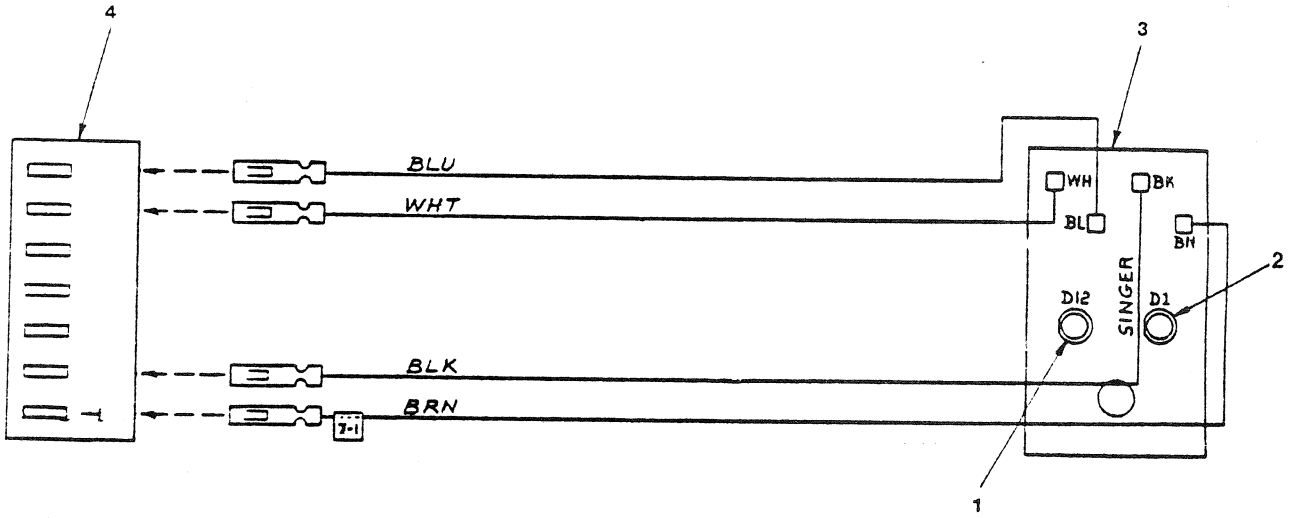

Figure 23, RECORD INDICAROR HARNESS ASSY (non SP)

FIG. & INDEX NO.	PART NUMBER	DESCRIPTION Rev D	QTY	MODELS USED ON
23-	45605-G1	RECORD INDICATOR HARNESS ASSY.	REF	3340, 3344, 3346J
-1				
-1	45948-P3	. LED (Green)	1	All
-2	45948-P1	. LED (Red).	1	All
-3	45561-P1	. BOARD, Circuit	1	All
-4	44512-P8	. CONNECTOR.	1	All

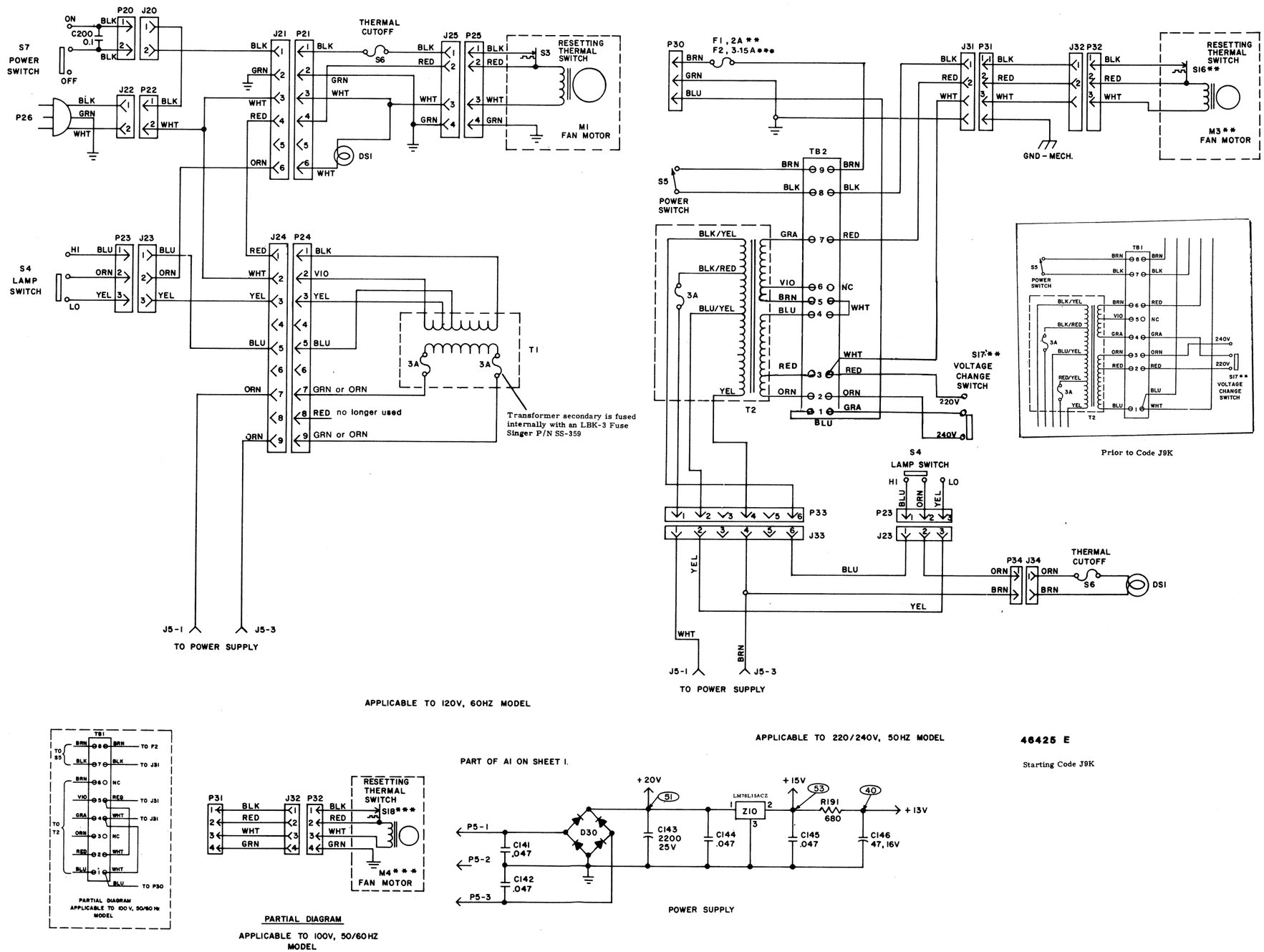

FIGURE 6-1. PROJECTOR SCHEMATIC DIAGRAM (Stage 1) Cat. 3320, 3324, 3326J

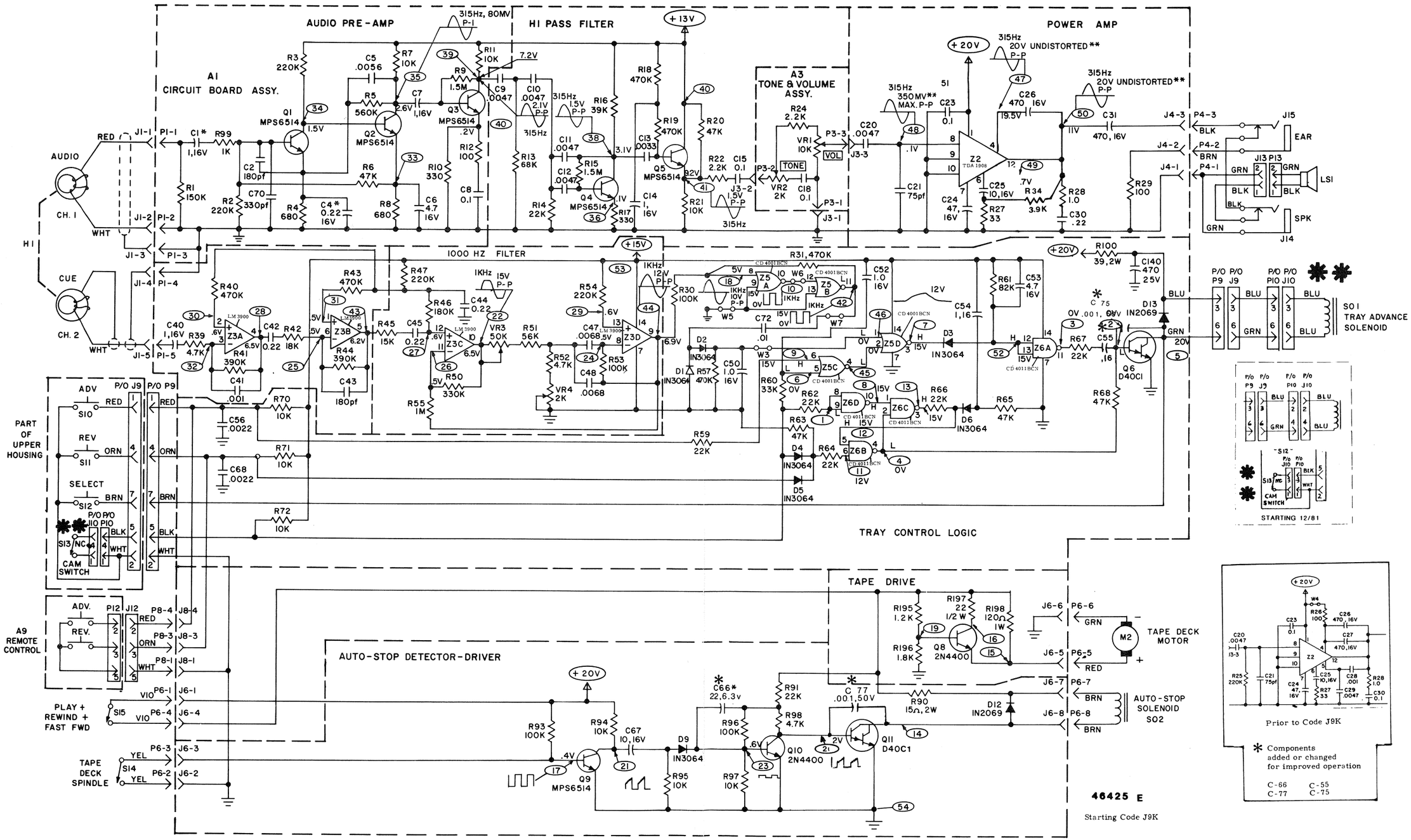

FIGURE 6-2. PROJECTOR SCHEMATIC DIAGRAM (Stage II) Cat. 3320, 3324, 3326J

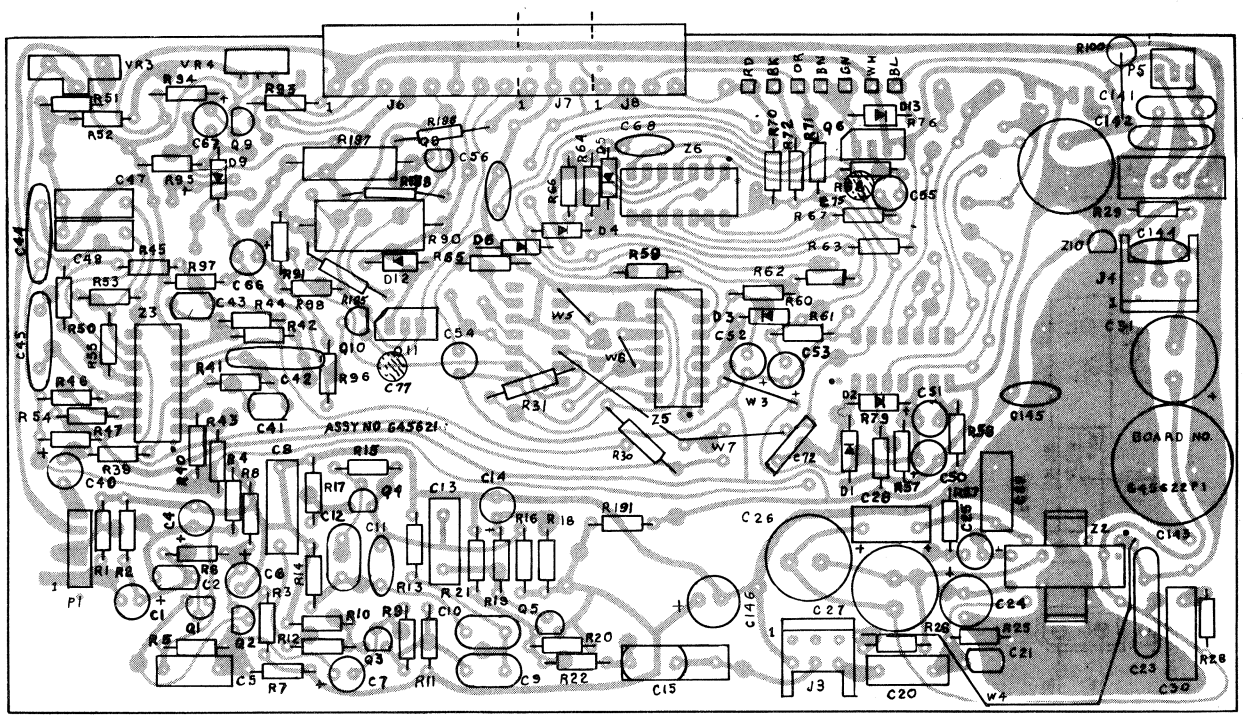

FIGURE 6-3 CIRCUIT BOARD (PLAY ONLY)(NON SP) MODEL 3320

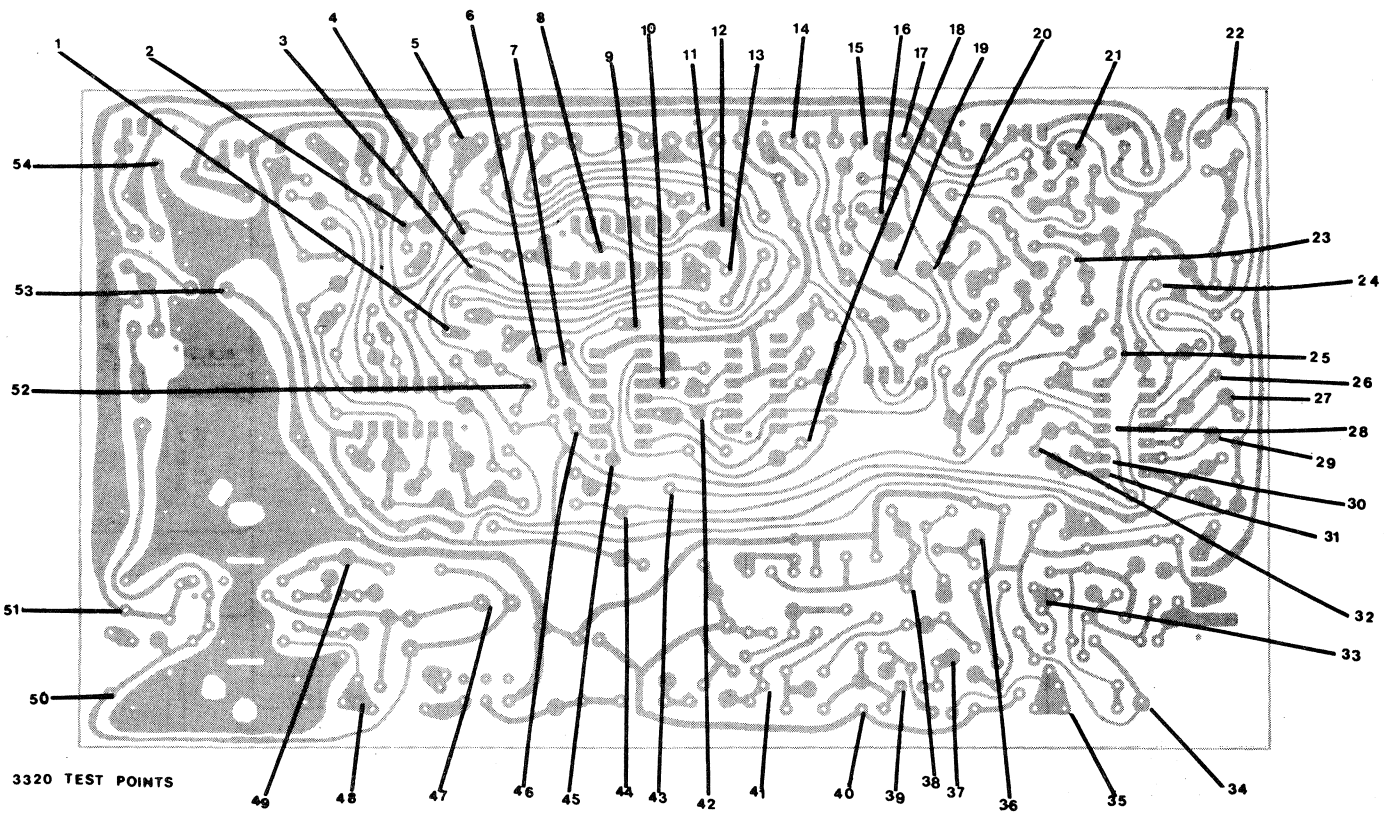

FIGURE 6-4, 3320 TEST POINTS (PLAY ONLY-NON SP)

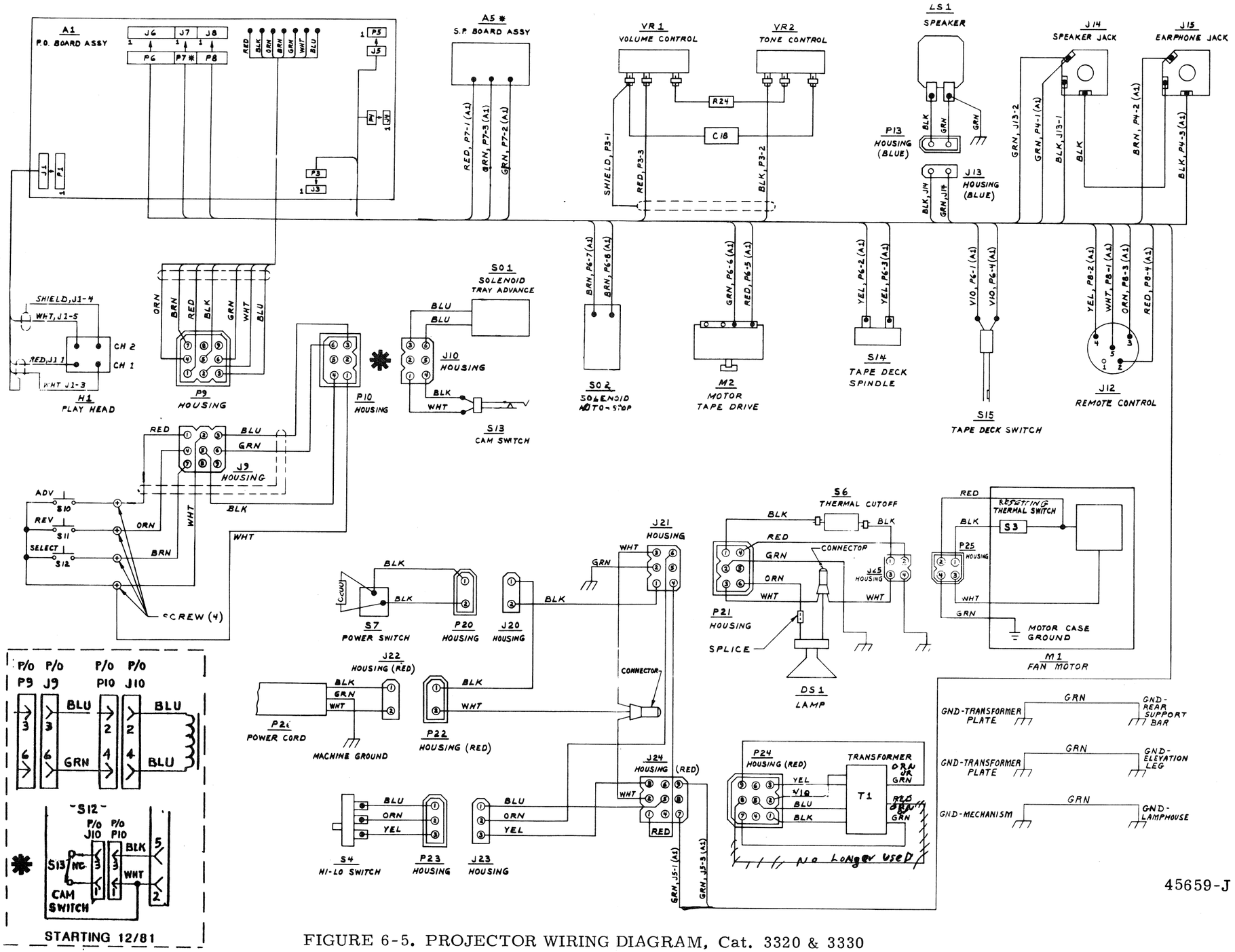

FIGURE 6-5. PROJECTOR WIRING DIAGRAM, Cat. 3320 & 3330

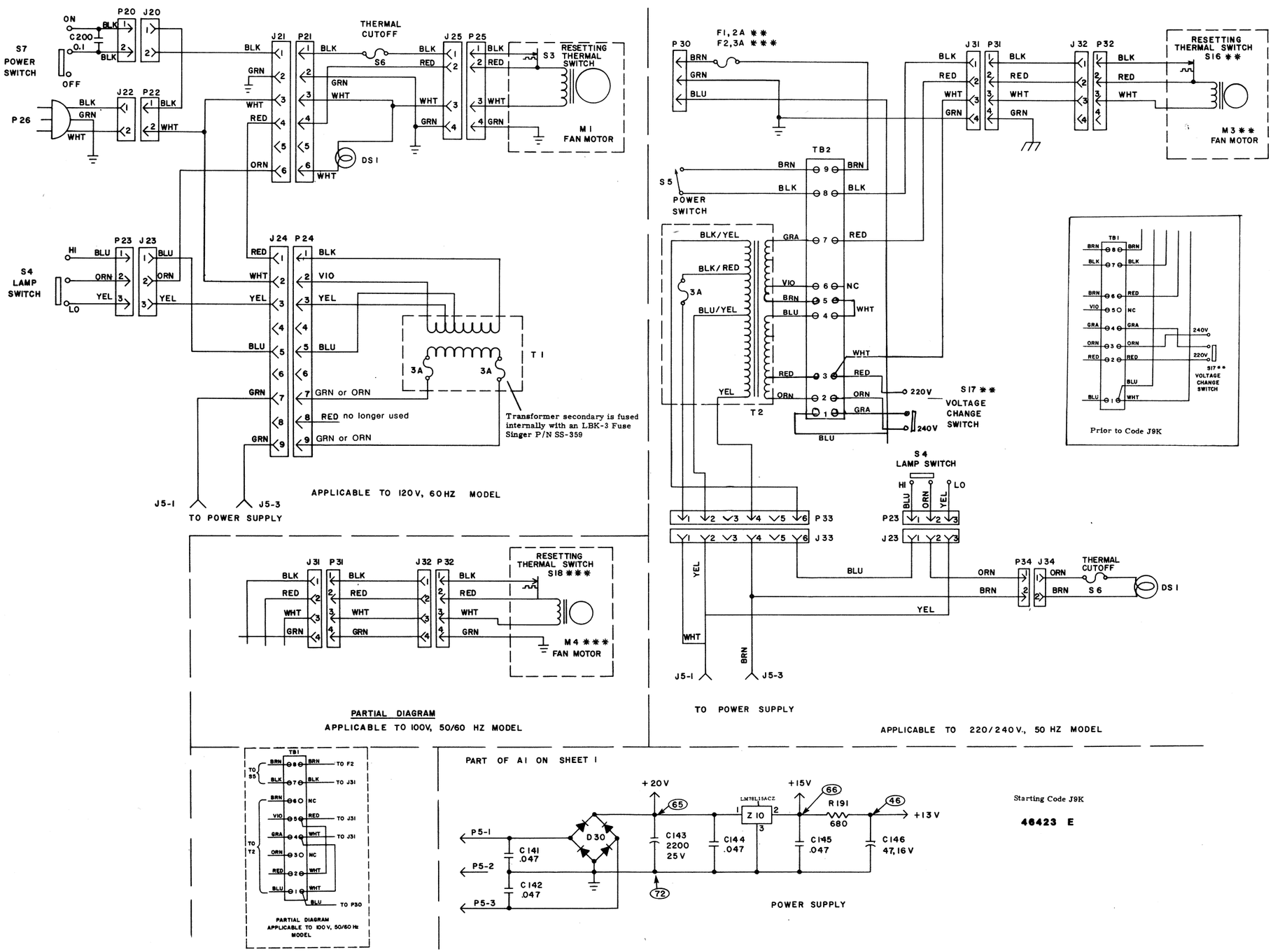

2-82

FIGURE 6-6. PROJECTOR SCHEMATIC DIAGRAM (Stage 1) Cat. 3330, 3334, 3336J

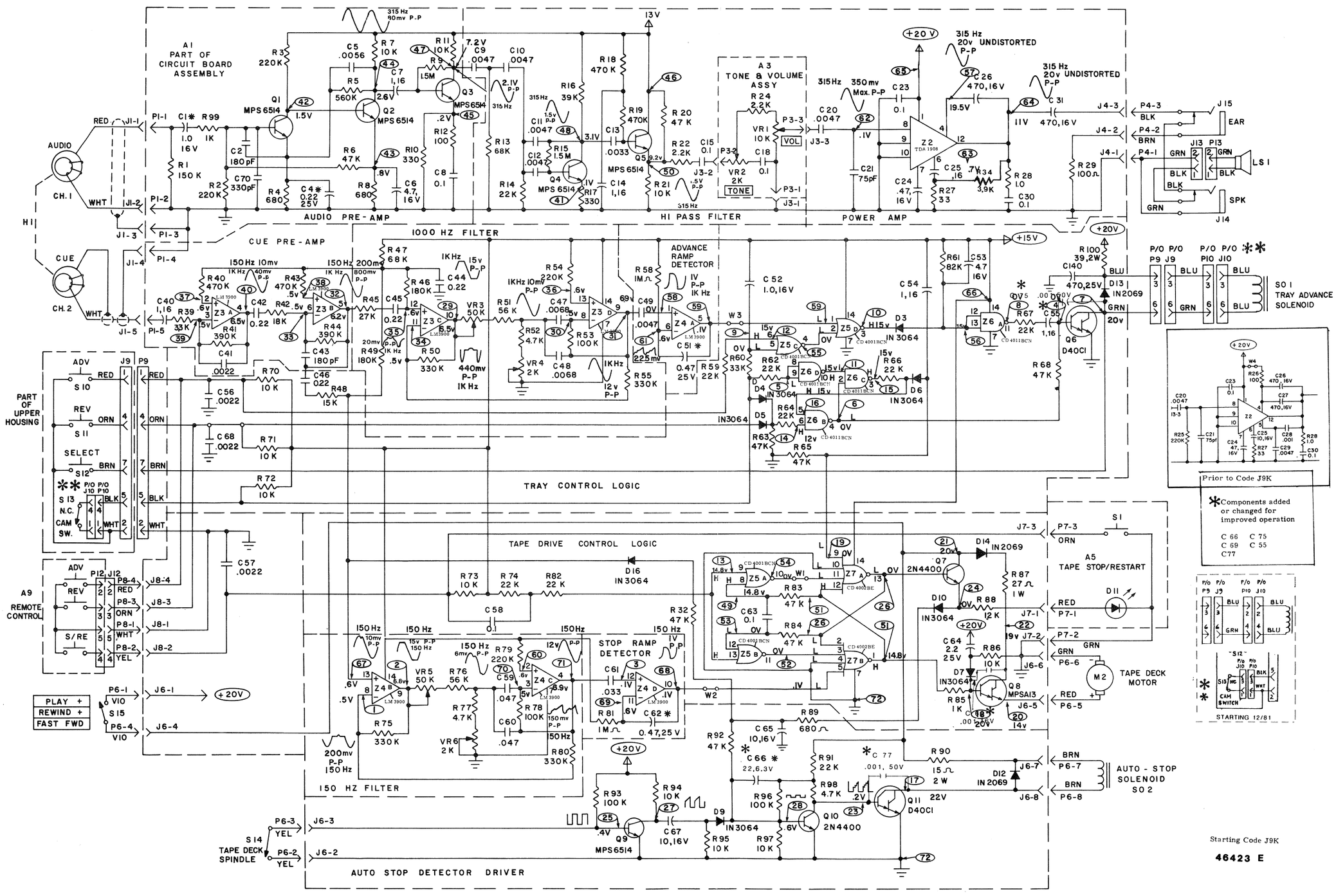

CARAMATE 3300

FIGURE 6-7. PROJECTOR SCHEMATIC DIAGRAM (Stage 2) Cat. 3330, 3334, 3336J

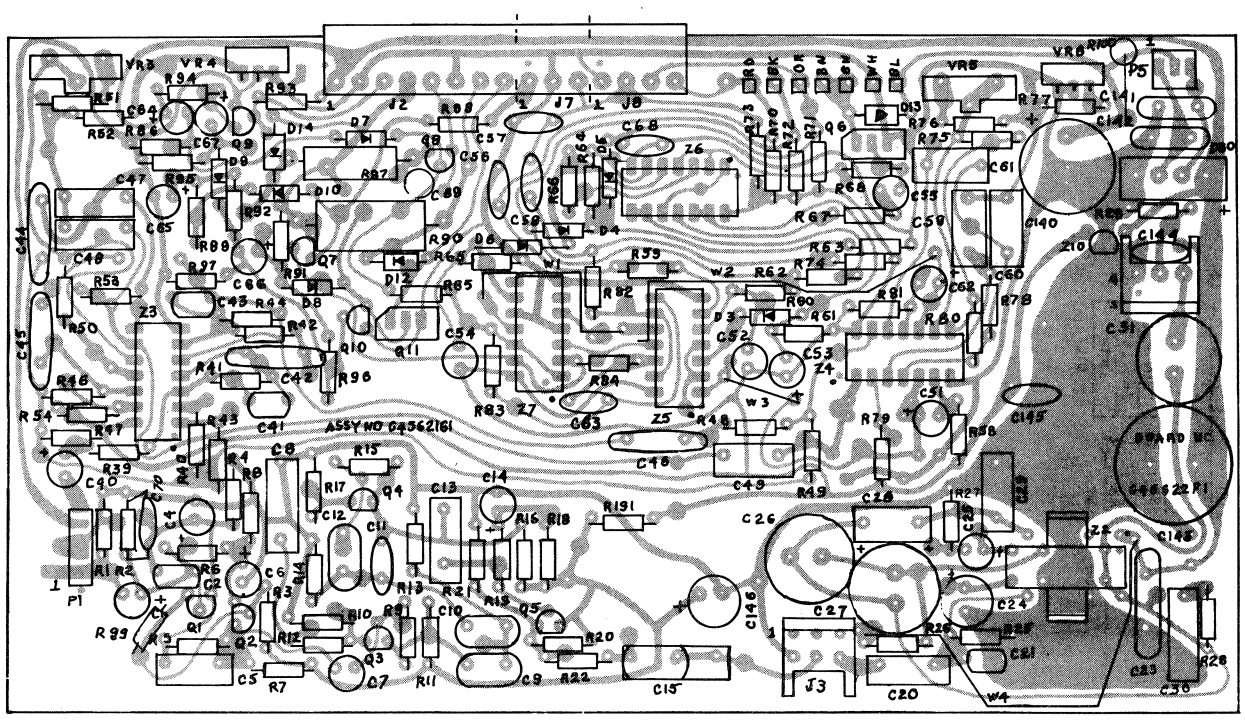

FIGURE 6-8 CIRCUIT BOARD (PLAY ONLY SP) Model 3330

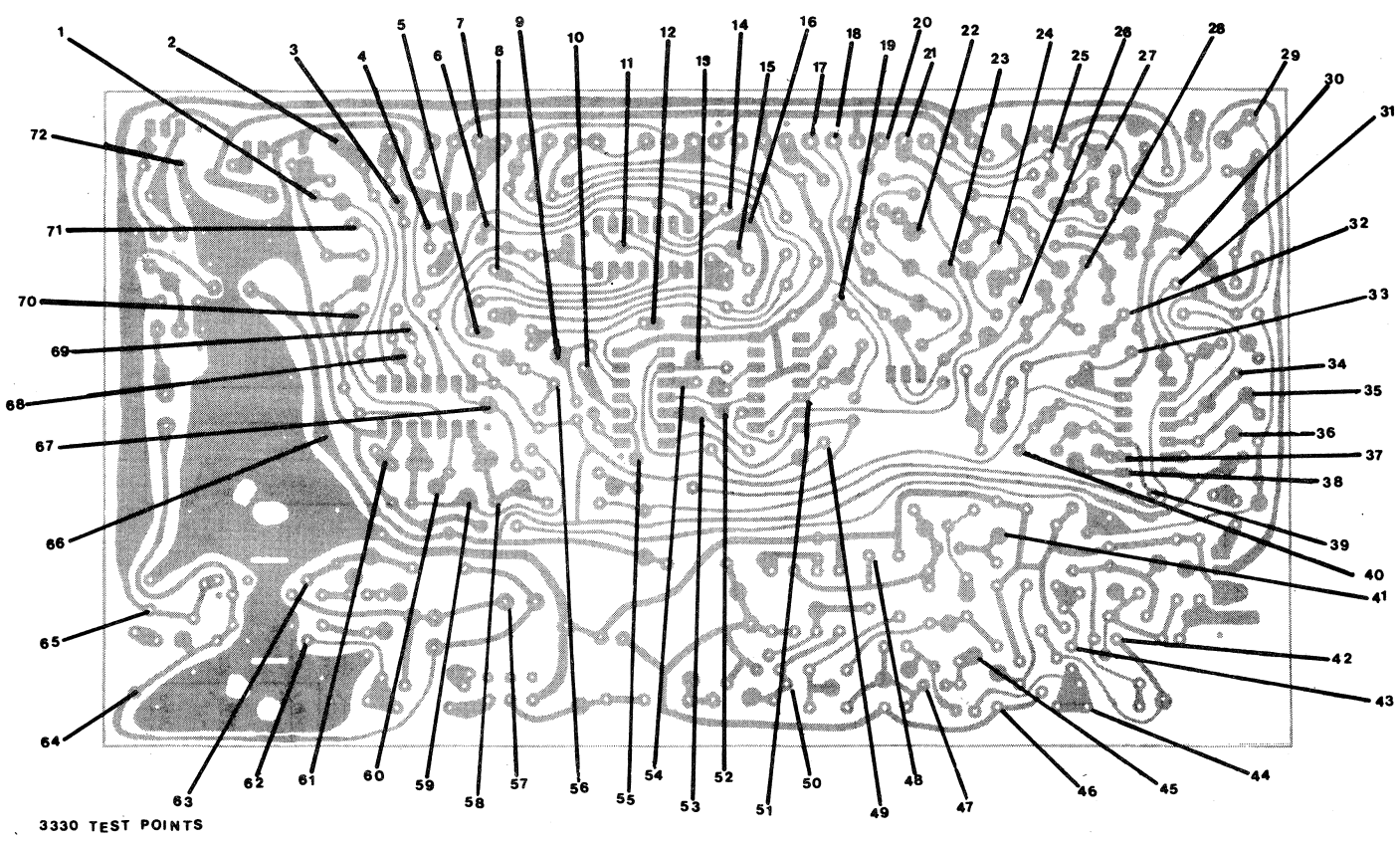

FIGURE 6-9 MODEL 3330 TEST POINTS (PLAY ONLY SP)

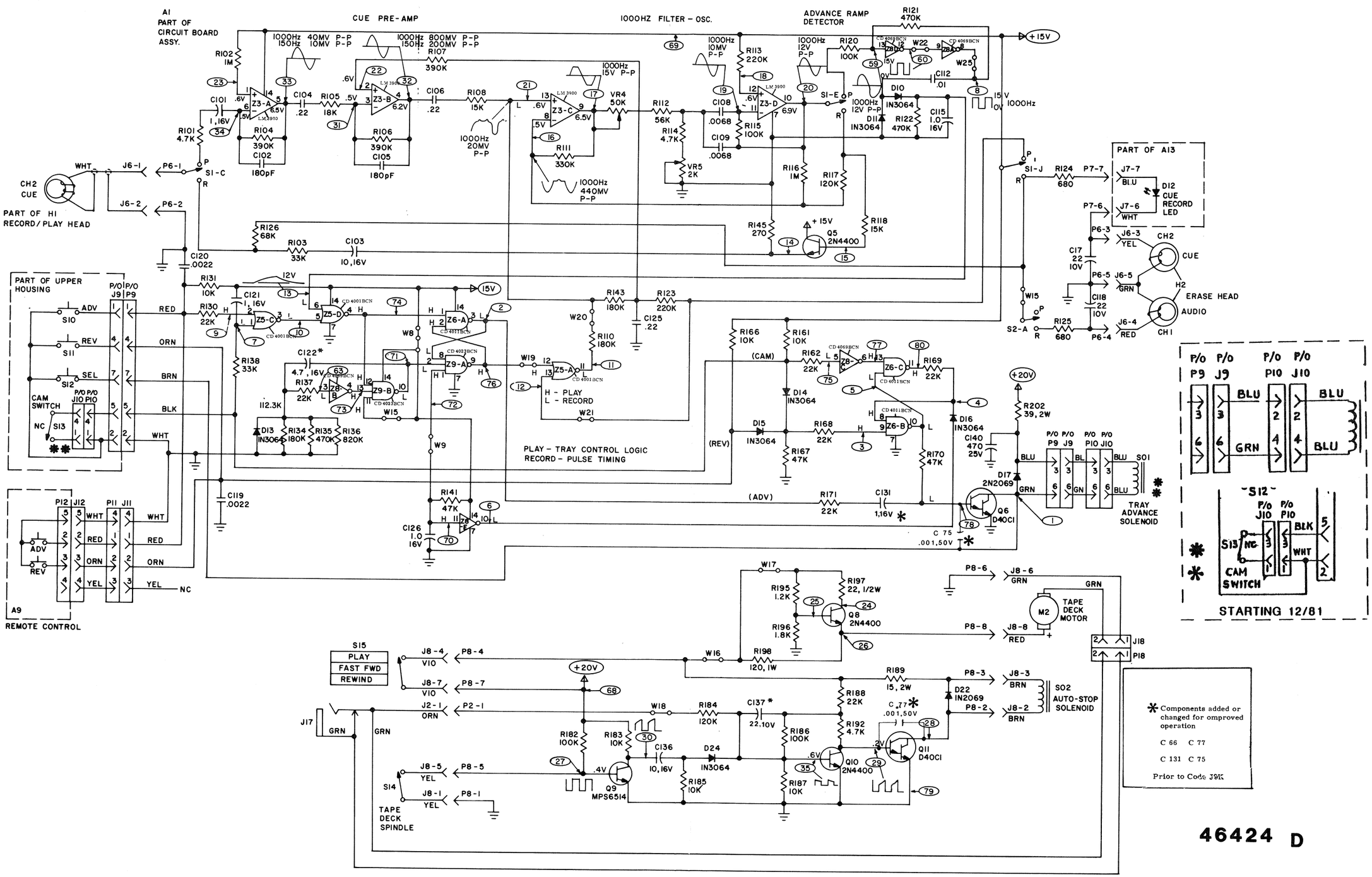

FIGURE 6-10. PROJECTOR SCHEMATIC DIAGRAM (Stage I) Models 3340, 3344, 3346J Starting Code J9K 2-82

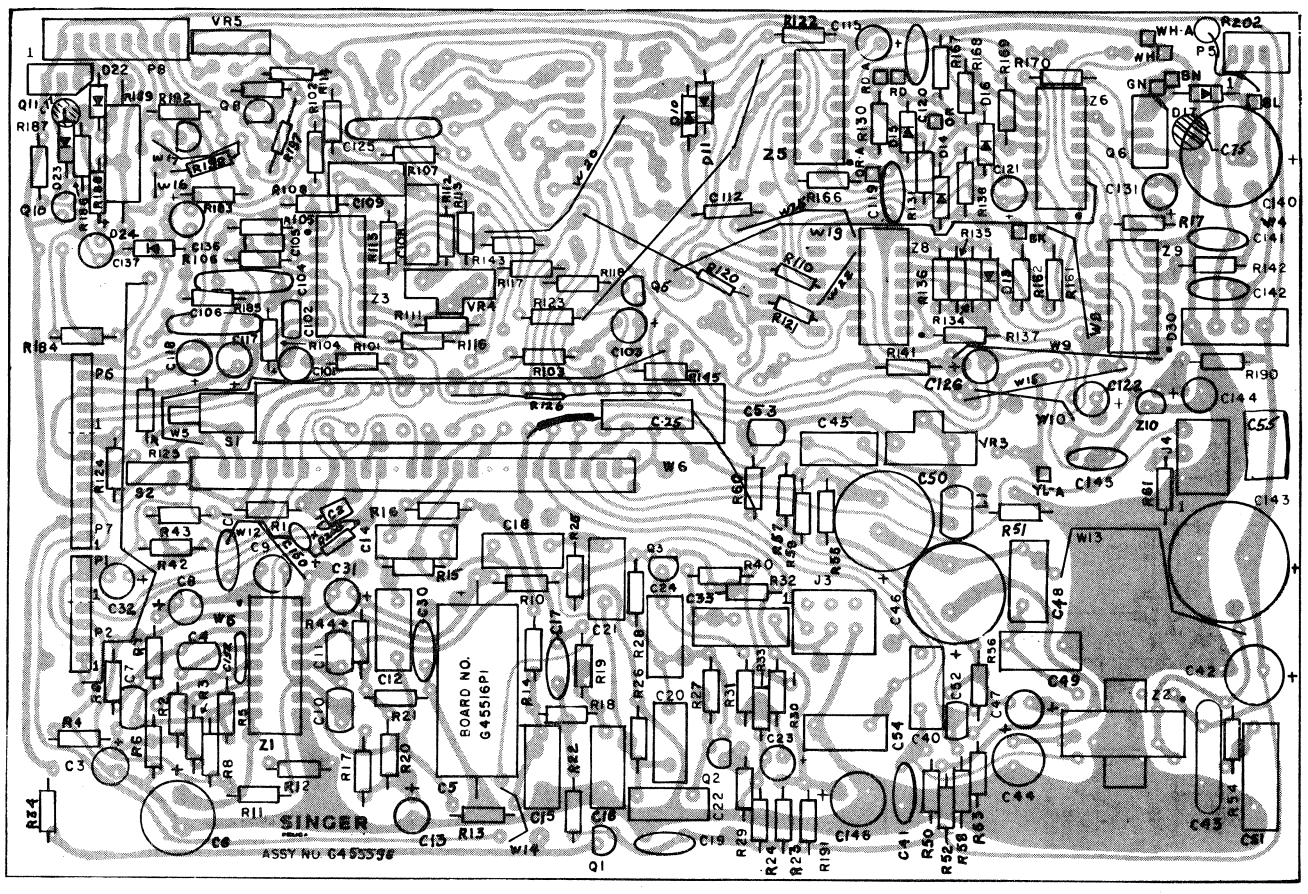

FIGURE 6-11 CIRCUIT BOARD (PLAY-RECORD NON SP)
MODEL 3340

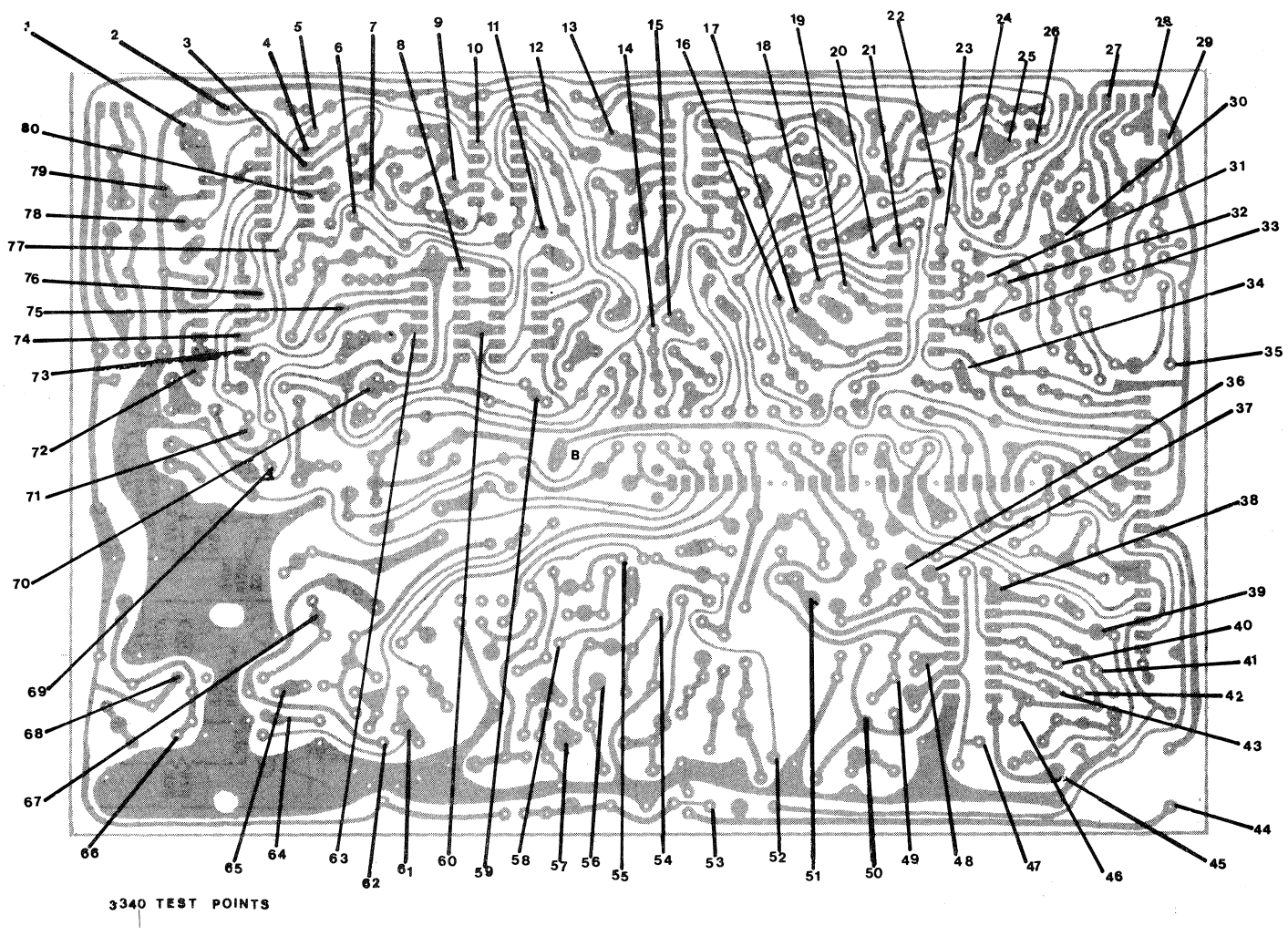

FIGURE 6-12. MODEL 3340 TEST POINTS PLAY-RECORD
(NON SP)

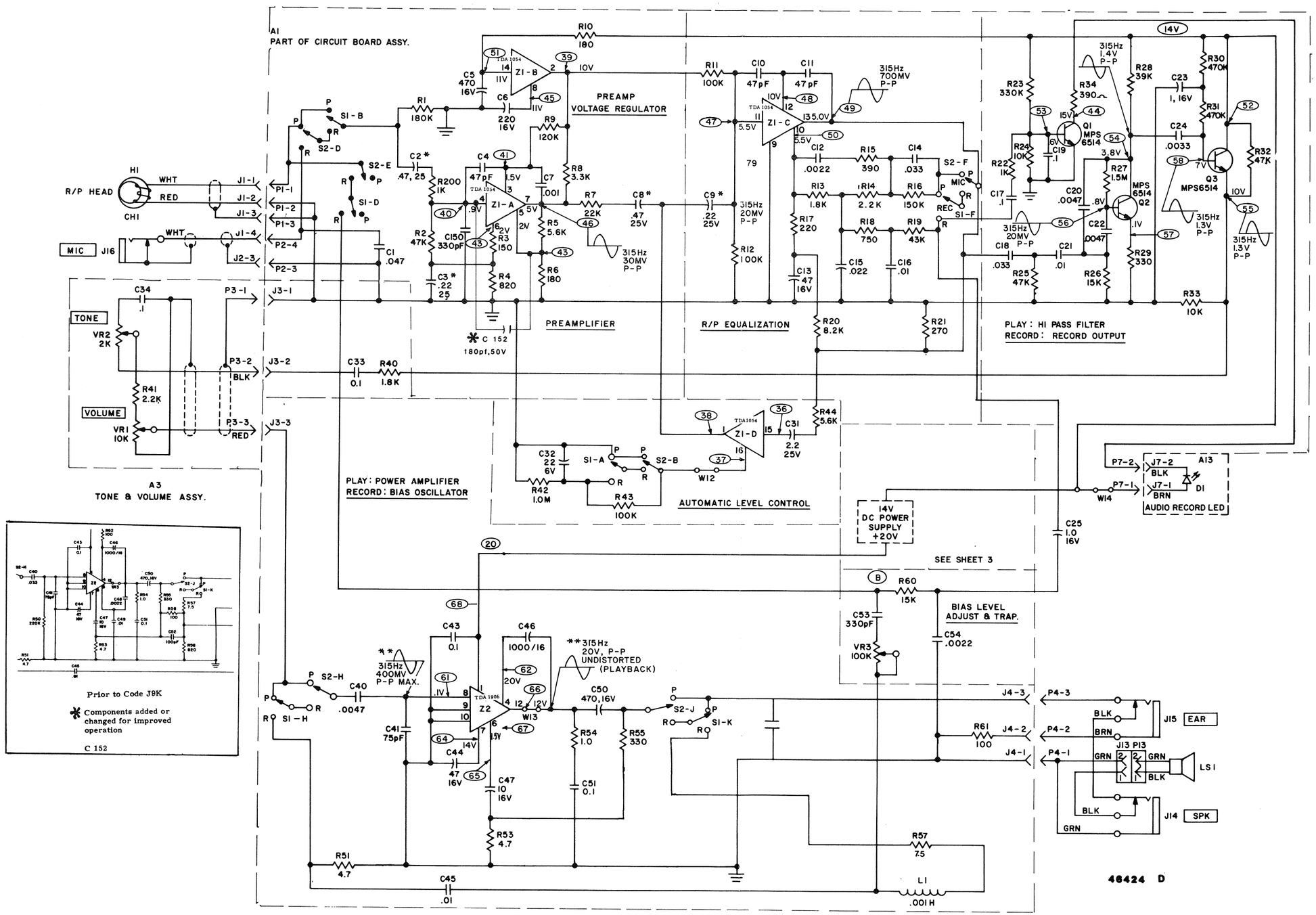

FIGURE 6-13. PROJECTOR SCHEMATIC DIAGRAM (Stage 2) MODEL 3340, 3344, 3346J

Starting Code J9K 2-82

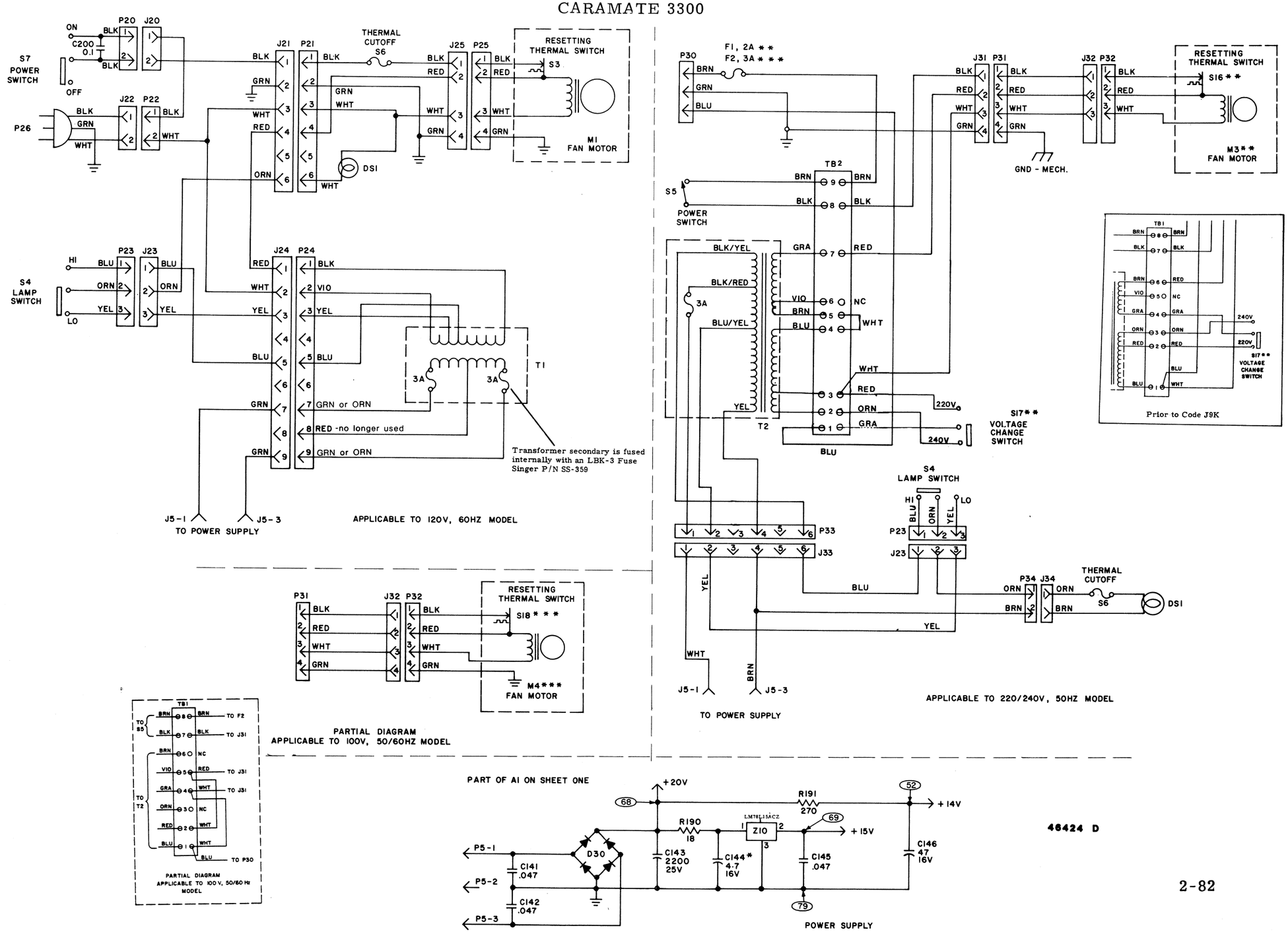

FIGURE 6-14. PROJECTOR SCHEMATIC DIAGRAM (Stage 3) MODEL 3340, 3344, 3346J Starting Code J9K

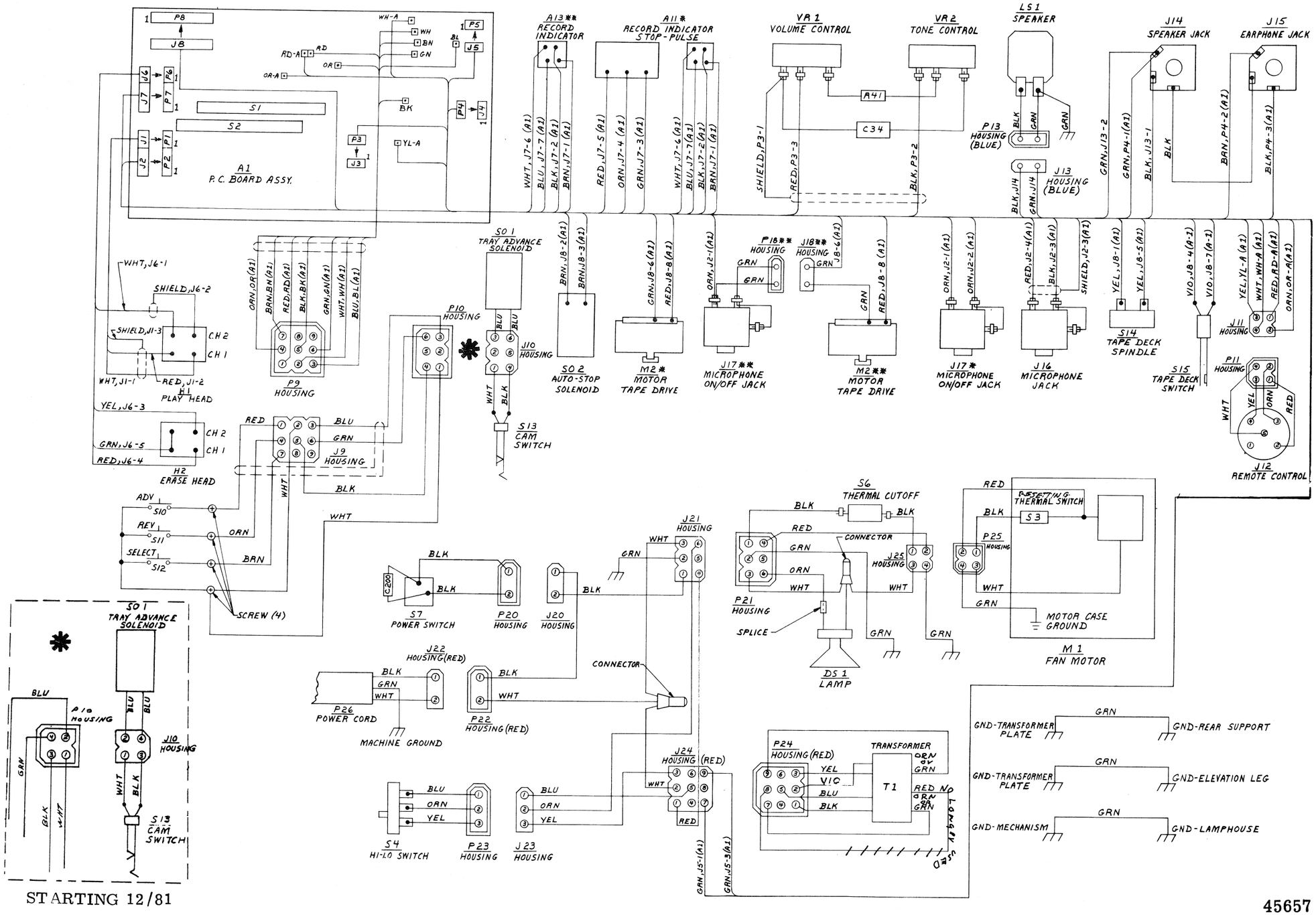

STARTING 12/81

45657 F

2-82

FIGURE 6-15. PROJECTOR WIRING DIAGRAM MODELS 3340 & 3350

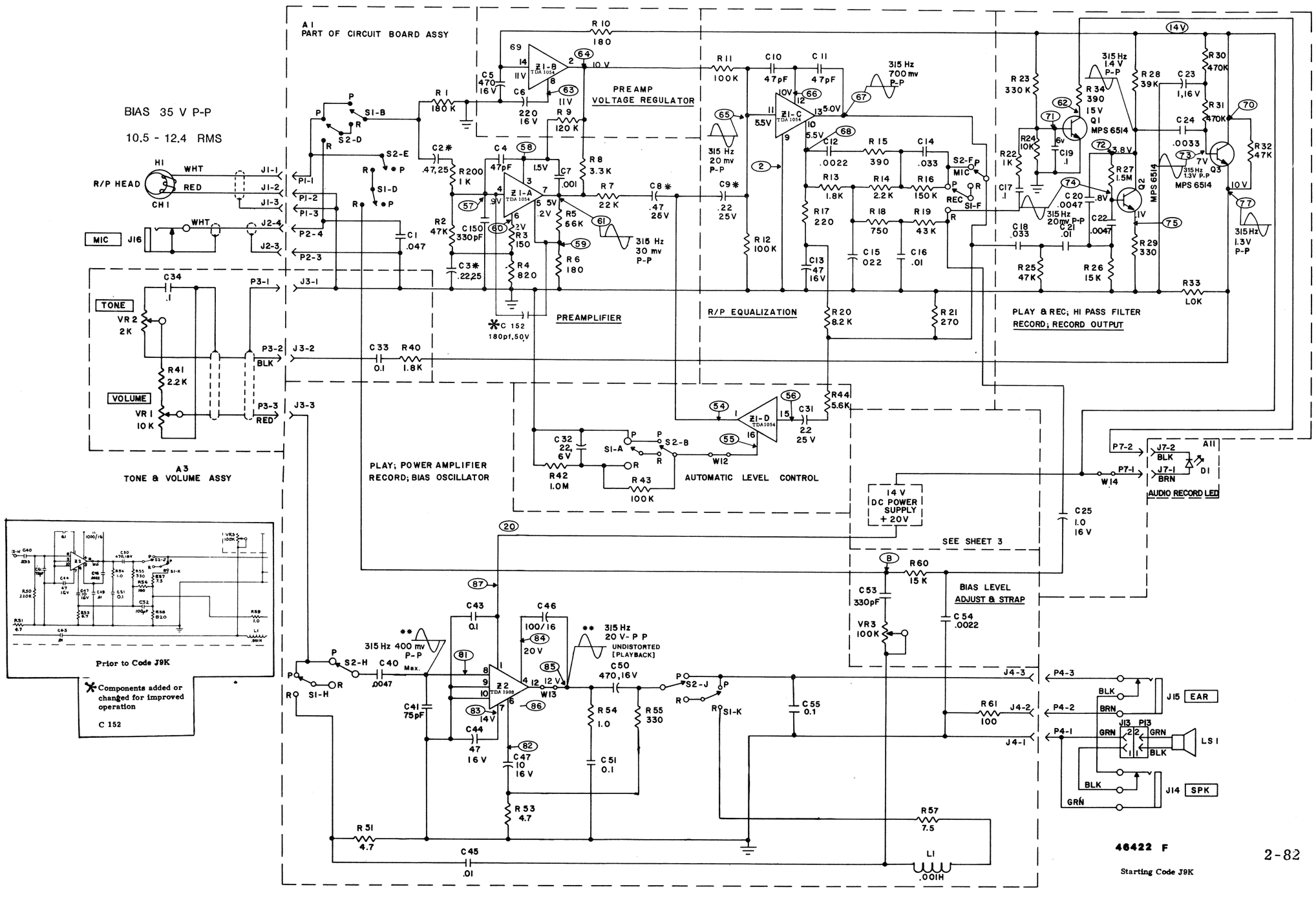

2-82

FIGURE 6-16. PROJECTOR SCHEMATIC DIAGRAM (Stage 1), Model 3350, 3354, 3356J

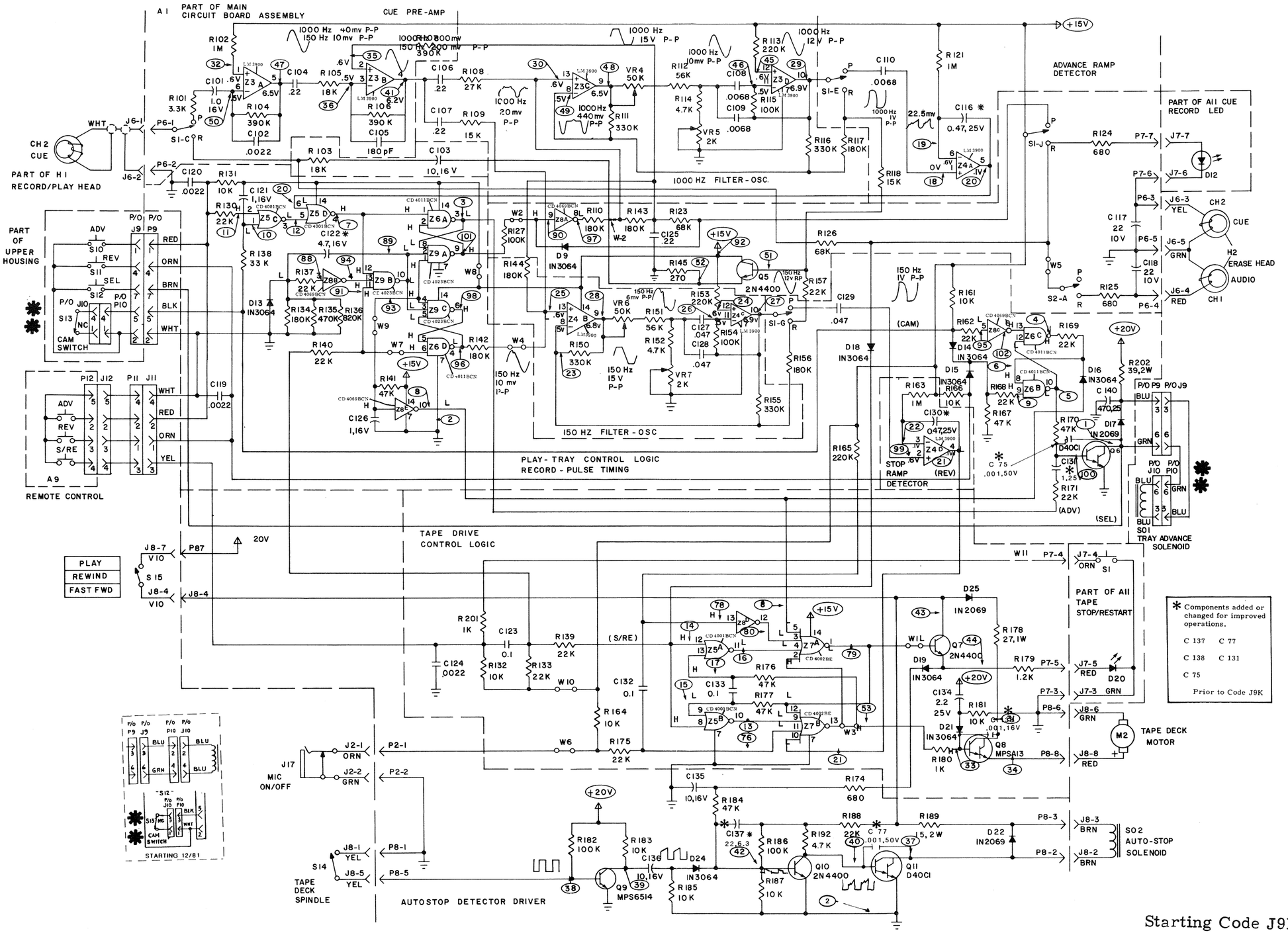

Starting Code J9K

46422 G

FIGURE 6-17. PROJECTOR SCHEMATIC DIAGRAM (Stage 2) Model 3350, 3354, 3356J

2-82

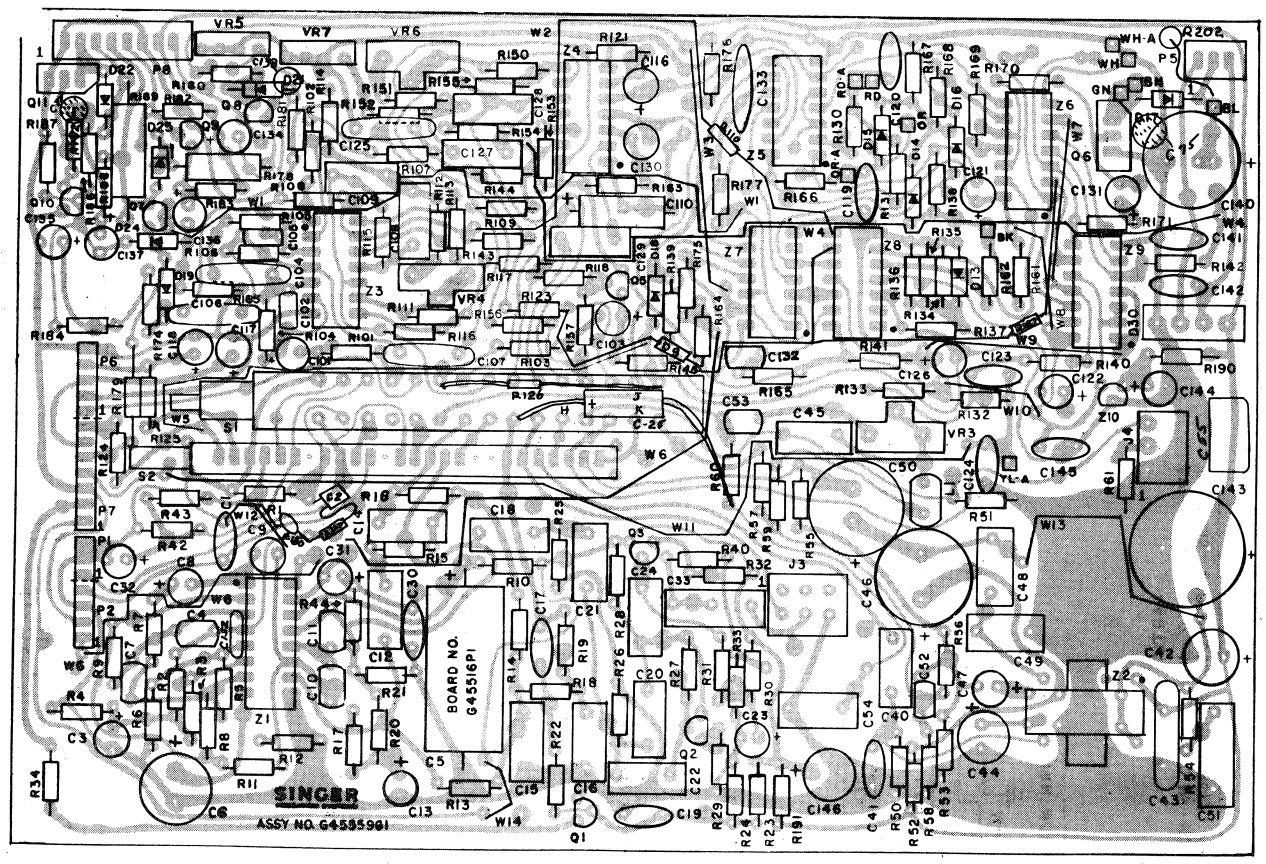

FIGURE 6-18. CIRCUIT BOARD (PLAY-RECORD) (SP)
MODEL 3350

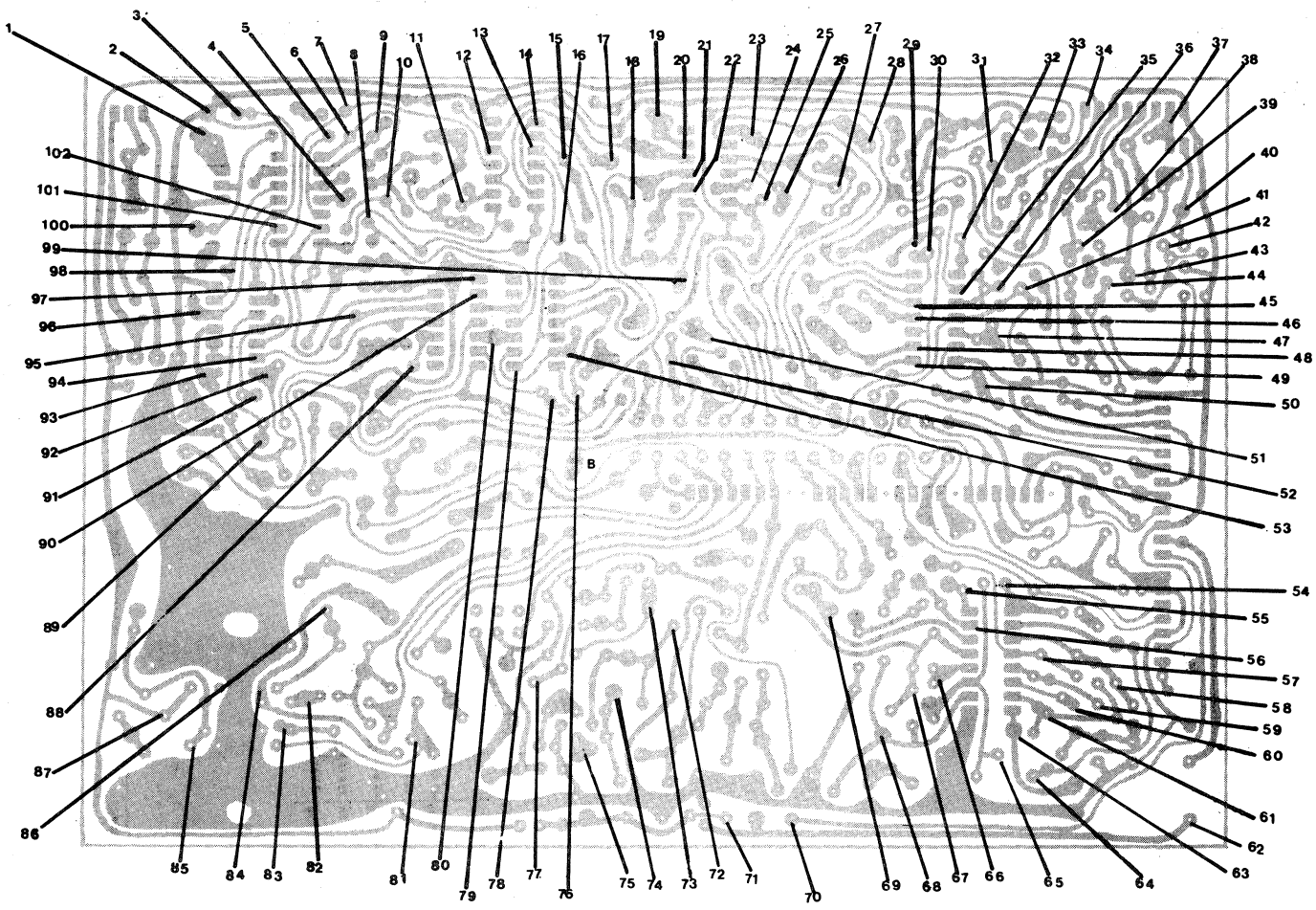

FIGURE 6-19. MODEL 3350 TEST POINTS (PLAY-RECORD) (SP)

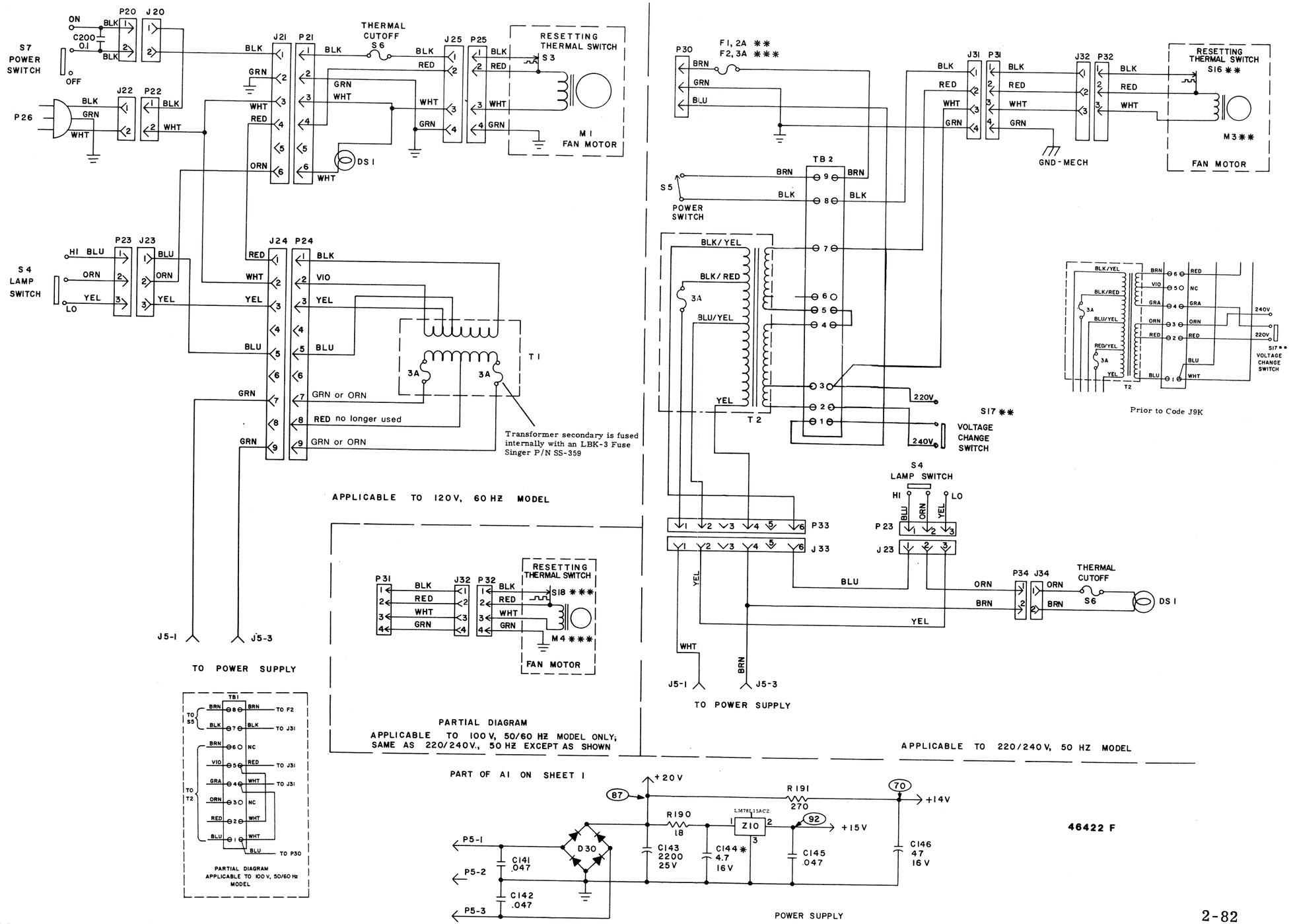

FIGURE 6-20. PROJECTOR SCHEMATIC DIAGRAM, (Stage 3), Model. 3350, 3354, 3356J

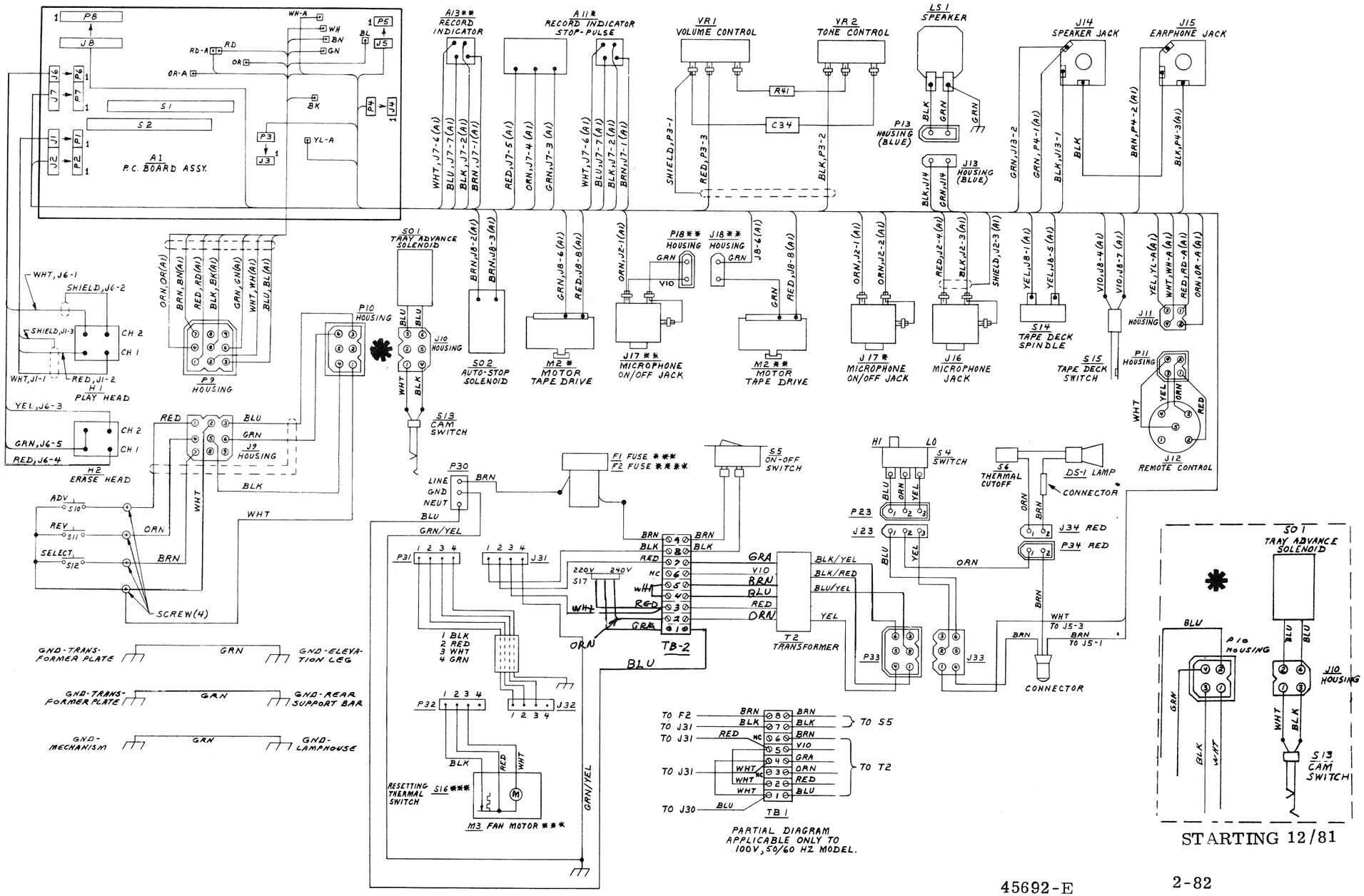

STARTING 12/81

45692-E

2-82

FIGURE 6-21. PROJECTOR WIRING DIAGRAM, Models 3354, 3344, 3356J, 3346J

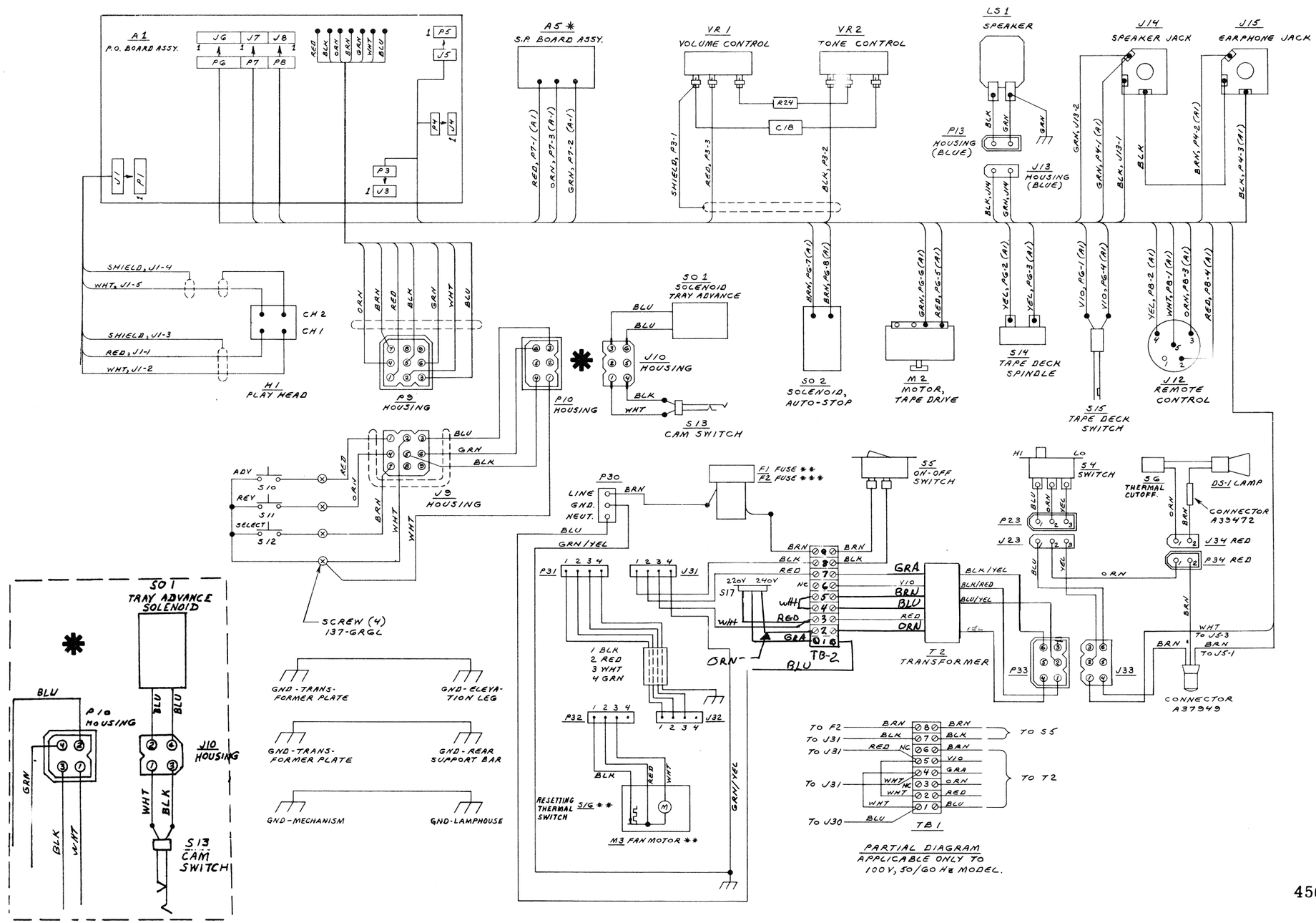

45685-E

STARTING 12/81

FIGURE 6-22. PROJECTOR WIRING DIAGRAM, Model 3334, 3324, 3336J, 3326J

CARAMATE AUTOMATIC TIMER
Cat. No. 19-710

With the Timer plugged into the projector and the projector turned on, power is supplied to the timer on pin 2 of the connecting cord and the timer will advance slides automatically.

The timing for slide changes is continuously variable from 2 to 30 slides per minute, adjusted by varying potentiometer VR-1 between "SLOW" and "FAST".

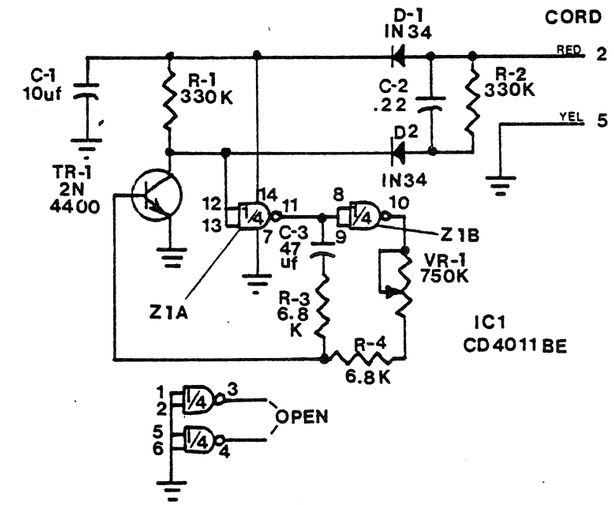

AV 35-23-1A CIRCUIT BOARD

			REF
C-1	45072-P6	CAPACITOR 10uf, 16V	1
C-2	42756-P5	CAPACITOR .22uf, 100V	1
C-3	44030-P6	CAPACITOR 47uf, 50V	1
D-1 & D-2	38553-P1	DIODE (IN34)	2
Z-1	45593-P1	NAND GATE (RCA CD 4001BD or Equal)	1
R-3 & R-4	406-682-3	RESISTOR 6.8K ±5% ¼W	2
R-1 & R-2	406-334-3	RESISTOR 330K ±5% ¼W	2
VR-1		POTENTIOMETER 750K (TRW US 754L)	1
TR-1	44294-P1	TRANSISTOR (2N4400)	1
	43878-P1	. CAP, Slider	1
	265-9	. GROMMET	1
	45639-P1	. CABLE	1