Konica
SERVICE MANUAL

Konica

N HEXANON LENSES

No. 1

KONICA

UC HEXANON LENSES

REPAIR MANUAL

UC FISH-EYE HEXANON AR

15 mm F2.8 (Automatic)

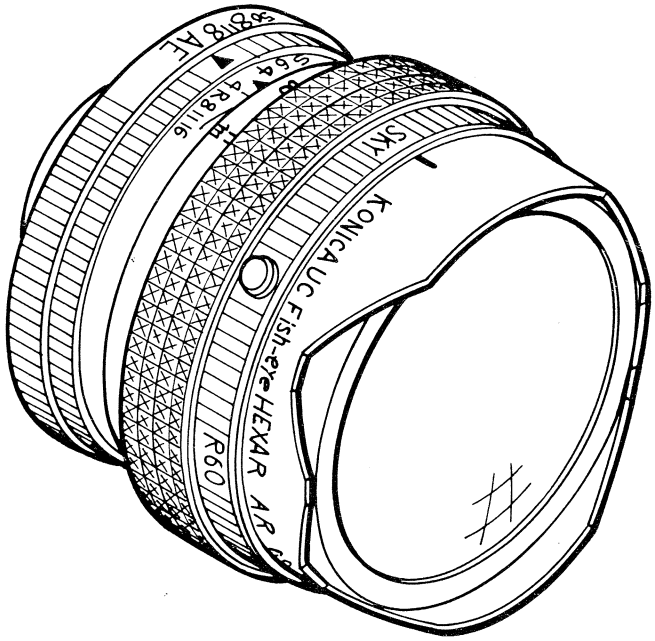

UC FISH-EYE HEXANON AR
15 mm F2.8 (Automatic)

MODEL No. 3598

1	2	3	4	5
Fig. No.	Parts No. or Sub-assembly	部品・部組名称	Parts name or Sub-assembly name	Note
A-1	501	レンズキャップ部組	Lens cap sub-assy	
	X 07501	レンズキャップ	Lens cap	
	X 07502	キャップ用モールドバネ	Mold lining to lens cap	〔S640〕-07501
A-2	701	前群レンズ部組	Front lens sub-assy	
	X 07901	第1レンズ	No.1 Lens	
	X 07902	第2レンズ	No.2 Lens	
	X 07903	第3レンズ	No.3 Lens	
	X 07904	第4レンズ	No.4 Lens	
	X 07905	第5レンズ	No.5 Lens	
	X 07952	前鏡枠	Front lens barrel	〔S640〕-07952
	X 07953	1番玉押え	Set ring for No.1 lens	
	X 07954	間隔リング	Spacer ring	
	X 07961	中鏡枠	Middle lens barrel	〔S640〕-07952
	X 07962	5番玉押え	Set ring for No.5 lens	〔S640〕-07961
A-3	07511	マウントキャップ	Lens mount cap	
A-4	13143	1.2φ×1.6 皿小ネジ	1.2φ×1.6 Counter sunk screw	〔S640〕-07403
A-5	07403	化粧リング	Covered ring	〔S640〕-07401
A-6	702	後群レンズ部組	Rear lens sub-assy	
	X 07906	第6レンズ	No.6 Lens	
	X 07907	第7レンズ	No.7 Lens	
	X 07908	第8レンズ	No.8 Lens	
	X 07909	第9レンズ	No.9 Lens	
	X 07981	後鏡枠	Rear lens barrel	
	X 07982	後玉押え枠	Set ring for No.9 lens	〔S640〕-07981
A-7	07271	化粧ネジ	Covering screw	
A-8	16405	1.7φ×2.0剣先ネジ	1.7φ×2.0 Round head screw	〔S640〕-07311
A-9	07311	前　筒	Front tube	
A-10	251	フィルター切換リング部組	Filter change ring sub-assy	
	X 07251	フィルター切換リング	Filter change ring	
	X 07255	フィルター変換つまみ	Filter change knob	
	X 07256	変換クラッチ	Change clutch	
	X 07257	クラッチバネ	Clutch spring	
	61425	1.7φ×2.5 平小ネジ	1.7φ×2.2 Flat screw	
A-11	07254	フィルター取付座押え	Set ring for filter set tube	〔S640〕-07201

UC FISH-EYE HEXANON AR
15 mm F2.8 (Automatic)

MODEL No. 3598

1	2	3	4	5
Fig. No.	Parts No. or Sub-assembly	部品・部組名称	Parts name or Sub-assembly name	Note
A-12	07265	連結レバー軸	Connection lever shaft	
A-13	07264	フィルター作動バネ	Filter working spring	
A-14	261	フィルター駆動レバー部組	Filter turning lever sub-assy	
	X 07261	フィルター駆動レバー	Filter turning lever	
	X 07262	ローラー軸	Roller shaft	
	X 07263	駆動レバーローラー	Roller for turning lever	
A-15	07268	フィルター枠アーム止めネジ	Set screw for filter frame arm	
A-16	260	フィルター連結レバー部組	Filter connection lever sub-assy	
	X 07259	偏芯軸	Eccentric shaft	
	X 07260	フィルター連結レバー	Filter connection lever	
A-17	07253	フィルター取付座	Filter set tube	
A-18	930	フィルター部組(SKY)	Filter sub-assy (SKY)	
	X 07930	フィルター硝子(SKY)	Filter (SKY)	
	X 07266	フィルターレバー軸	Shaft for filter lever	
	X 07267	フィルター枠アーム	Arm for filter frame	
	X 07269	フィルター枠	Filter frame	
	X 07270	フィルター枠止め鋲	Rivet for filter frame	
A-19	931	フィルター部組(B8)	Filter sub-assy (B8)	
	X 07931	フィルター硝子(B8)	Filter (B8)	
	X 07266	フィルターレバー軸	Shaft for filter lever	
	X 07267	フィルター枠アーム	Arm for filter frame	
	X 07269	フィルター枠	Filter frame	
	X 07270	フィルター枠止め鋲	Rivet for filter frame	
A-20	932	フィルター部組(R60)	Filter sub-assy (R60)	
	X 07932	フィルター硝子(R60)	Filter (R60)	
	X 07266	フィルターレバー軸	Shaft for filter lever	
	X 07267	フィルター枠アーム	Arm for filter frame	
	X 07269	フィルター枠	Filter frame	
	X 07270	フィルター枠止め鋲	Rivet for filter frame	
A-21	933	フィルター部組(Y52)	Filter sub-assy (Y52)	
	X 07933	フィルター硝子(Y52)	Filter (Y52)	
	X 07266	フィルターレバー軸	Shaft for filter lever	
	X 07267	フィルター枠アーム	Arm for filter frame	

UC FISH-EYE HEXANON AR
15 mm F2.8 (Automatic)

MODEL No. 3598

1	2	3	4	5
Fig. No.	Parts No. or Sub-assembly	部品・部組名称	Parts name or Sub-assembly name	Note
	X 07269	フィルター枠	Filter frame	
	X 07270	フィルター枠止め鋲	Rivet for filter frame	
A-22	07161	接続ネジ B	Connection set screw B	〔S640〕-07253
A-23	07219	フォーカスリング光皮	Leather (focus ring)	
A-24	16575	2.0φ×3.0 剣先ネジ	2.0φ×3.0 Round head screw	〔S640〕-07217
A-25	07217	フォーカスリング	Focus ring	
A-26	63445	1.7φ×3.0 皿小ネジ	1.7φ×3.0 Counter sunk screw	〔S640〕-07151
A-27	07151	中 胴	Inside tube	
A-28	16285	1.4φ×2.0 剣先ネジ	1.4φ×2.0 Round head screw	〔S640〕-07151
A-29	101	羽根ケース部組	Blade case sub-assy	
	61295	1.4φ×2.0 平小ネジ	1.4φ×2.0 Flat screw	
	X 07114	羽根押え板	Blade cover	
	X 07113	小座金	Washer	
	109	絞り羽根部組	Diaphragm blade sub-assy	
	X 7111	絞り羽根	Diaphragm blade	
	X 7112	羽根ダボ	Diaphragm blade dowell	
	61275	1.4φ×1.8 平小ネジ	1.4φ×1.8 Flat screw	
	X 07116	バネ用柱	Spring stud screw	
	X 07105	リング押え板	Set plate for turning ring	
	X 07110	ベルクランクバネ	Bell crank spring	
	X 07109	ベルクランク回転軸	Rotation shaft for bell crank	
	X 106	ベルクランク部組	Bell crank sub-assy	
	X 07106	ベルクランク	Bell crank	
	X 07107	ベルクランク軸	Bell crank pin	
	102	駆動リング部組	Turning ring sub-assy	
	X 07102	駆動リング	Turning ring	
	X 07103	駆動ピン A	Turning pin A	
	X 07104	駆動ピン B	Turning pin B	
	X 07101	羽根ケース	Blade case	
A-30	07108	ベルクランクローラー	Bell crank roller	Ⓜ—07107, 07158
A-31	15310	1.4φ×2.8 薄平小ネジ	1.4φ×2.8 Thin flat screw	
A-32	07157	リング制限板	Stopper plate	

UC FISH-EYE HEXANON AR
15 mm F2.8 (Automatic)

MODEL No. 3598

1	2	3	4	5
Fig. No.	Parts No. or Sub-assembly	部品・部組名称	Parts name or Sub-assembly name	Note
A-33	07162	作動バネ柱 B	Stud for main spring B	〔S640〕-07151
A-35	07159	作動バネ	Main spring	
A-36	61285	1.7φ×2.0 平小ネジ	1.7φ×2.0 Flat screw	
A-37	07158	溝カム	Grooved cam	
A-38	07156	ボール押え A	Set ring A for ball	
A-39	51169	1.6φ 鋼球	1.6φ steel ball	
A-40	151	作動リング部組	Working ring for blade sub-assy	
	X 07153	絞り作動リング	Working ring for blade	
	X 07160	作動バネ柱 A	Stud for main spring A	
	X 07211	接続ネジ	Connection set screw	
A-41	63459	1.7φ×3.5 皿小ネジ	1.7φ×3.5 Counter sunk screw	
A-42	401	マウント部組	Lens mount sub-assy	
	X 07401	マウント	Lens mount	
	X 07402	マウント制限ピン	Lens mount limitation pin	
A-43	07334	マニュアルストッパー止めネジ	Set screw for mannual stopper	
A-44	07335	マニュアルストッパーバネ	Manual stopper spring	
A-45	331	マニュアルストッパー部組	Manual stopper sub-assy	
	X 07331	マニュアルストッパー	Manual stopper	
	X 07333	マニュアルストッパーバネ掛け	Spring stud for manual stopper	
A-46	07336	絞りリングストッパー	Stopper pin for diaphragm ring	
A-47	07324	AEロックレバー軸	Set screw for AE lock lever	
A-48	07326	AEロックバネ	Spring for AE lock lever	
A-49	323	AEロックレバー部組	AE lock lever sub-assy	
	X 07323	AEロックレバー	AE lock lever	
	X 07325	AEロックバネ掛け	Spring stud for AE lock lever	
A-50	321	AEロック釦部組	AE lock button sub-assy	
	X 07321	AEロック釦	AE lock button	
	X 07322	AEロック連動ピン	Connection pin for AE lock	
A-51	07306	クリックバネ押え	Cap for click spring	

UC FISH-EYE HEXANON AR
15 mm F2.8 (Automatic)

MODEL No. 3598

1	2	3	4	5
Fig. No.	Parts No. or Sub-assembly	部品・部組名称	Parts name or Sub-assembly name	Note
A-53	07305	クリックバネ	Click spring	
A-54	51169	1.6φ 鋼球	1.6φ steel ball	
A-55	63295	1.4φ×2.2 皿小ネジ	1.4φ×2.2 Counter sunk screw	
A-56	07303	クリック板 B	Click plate B	
A-57	07304	クリック板 A	Click plate A	
A-58	65445	1.7φ×3.0 薄平小ネジ	1.7φ×3.0 Thin flat screw	
A-59	07204	直進案内板	Cuide plate for helicoid	
	202	ヘリコイド部組	Helicoid sub-assy	
A-(52)	X 07301	絞りリング	Diaphragm ring	
A-(61)	X 07201	ヘリコイド雄	Helicoid male	
A-(60)	X 07202	ヘリコイド雌	Helicoid female	
A-(66)	X 07203	取付座	Outside tube	
A-62	07215	ボール押え B	Set ring B for ball	
A-63	51169	1.6φ 鋼球	1.6φ steel ball	
A-64	07214	リテナー	Retainer	
A-65	203	接続リング部組	Connection ring for diaphragm sub-assy	
	X 07210	絞り接続リング	Connection ring for diaphragm	
	X 07212	マニュアル制限板	Limitation plate	
	07231	本体接続板 A	Connection plate A	
	07232	本体接続板 B	Connection plate B	
	07233	本体接続板 C	Connection plate C	
	X 07234	本体接続板止ネジ	Set screw for connection lever	
	63295	1.4φ×2.2 皿小ネジ	1.4φ×2.2 Counter sunk screw	

UC FISH-EYE HEXANON AR 15 mm F2.8 (Automatic)

A

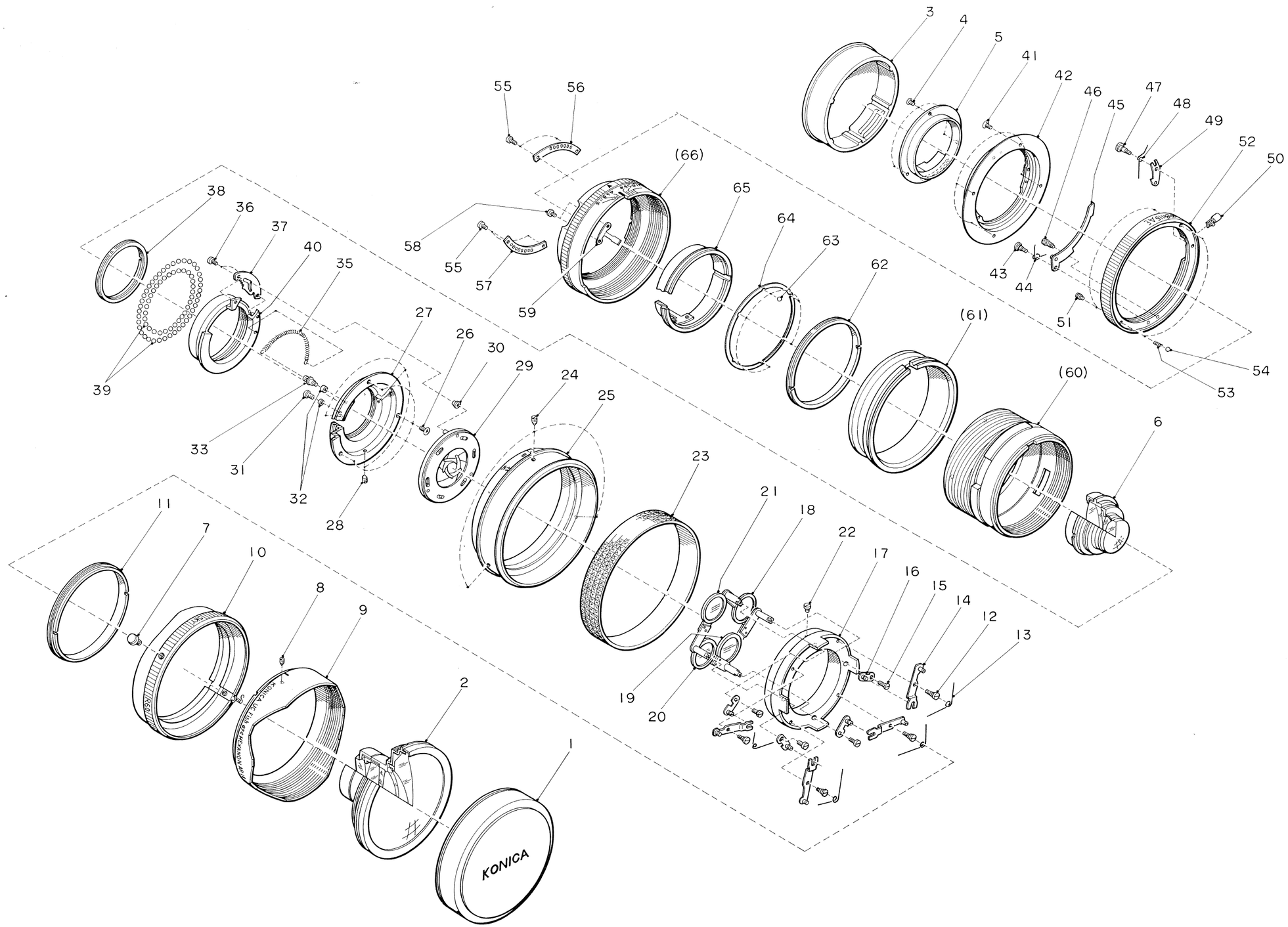

UC FISH-EYE HEXANON AR
15 mm F2.8 (Automatic)

MODEL No. 3598

1	2	3	4	5
Fig. No.	Parts No. or Sub-assembly	部品・部組名称	Parts name or Sub-assembly name	Note
	101	羽根ケース部組	Blade case sub-assy	
B-1	61295	1.4φ×2.0 平小ネジ	1.4φ×2.0 Flat screw	
B-2	X 07114	羽根押え板	Blade cover	
B-3	X 07113	小座金	Washer	
B-4	109	絞り羽根部組	Diaphragm blade sub-assy	
	X 7111	絞り羽根	Diaphragm blade	
	X 7112	羽根ダボ	Diaphragm blede dowell	
B-5	61275	1.4φ×1.8 平小ネジ	1.4φ×1.8 Flat screw	
B-6	X 07116	バネ用柱	Spring stud screw	
B-7	X 07105	リング押え板	Set plate for turning ring	
B-8	X 07110	ベルクランクバネ	Bell crank spring	
B-9	X 07109	ベルクランク回転軸	Rotation shaft for bell crank	
B-10	X 106	ベルクランク部組	Bell crank sub-assy	
	X 07106	ベルクランク	Bell crank	
	X 07107	ベルクランク軸	Bell crank pin	
B-11	X 102	駆動リング部組	Turning ring sub-assy	
	X 07102	駆動リング	Turning ring	
	X 07103	駆動ピン A	Turning pin A	
	X 07104	駆動ピン B	Turning pin B	
B-12	X 07101	羽根ケース	Blade case	
	151	作動リング部組	Working ring for blade sub-assy	
B-15	X 07153	絞り作動リング	Working ring for blade	
B-13	X 07160	作動バネ柱 A	Stud for main spring A	
B-14	X 07211	接続ネジ	Connection set screw	
	203	接続リング部組	Connection ring for diaphragm sub-assy	
B-20	X 07210	絞り接続リング	Connection ring for diaphragm	
B-17	X 07212	マニュアル制限板	Limitation plate	
B-19	07231	本体接続板 A	Connection plate A	
	07232	本体接続板 B	Connection plate B	
	07233	本体接続板 C	Connection plate C	
B-18	X 07234	本体接続板止めネジ	Set screw for connection lever	
B-16	63295	1.4φ×2.2 皿小ネジ	1.4φ×2.2 counter sunh screw	

UC FISH-EYE HEXANON AR 15 mm F2.8 (Automatic)

B

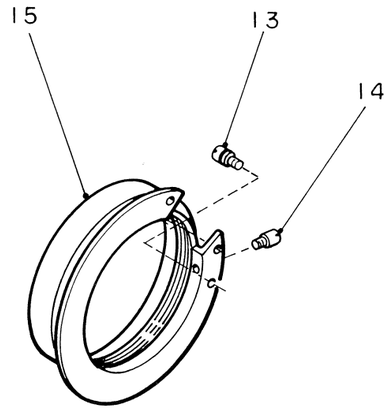

151

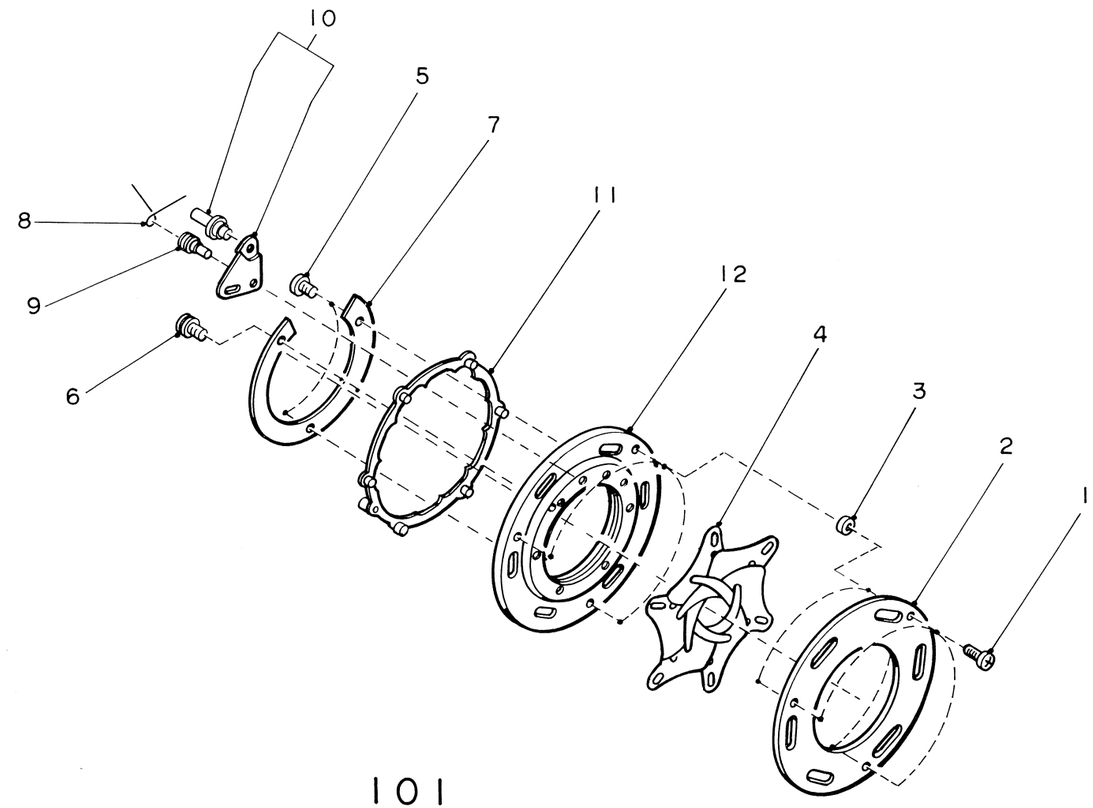

101

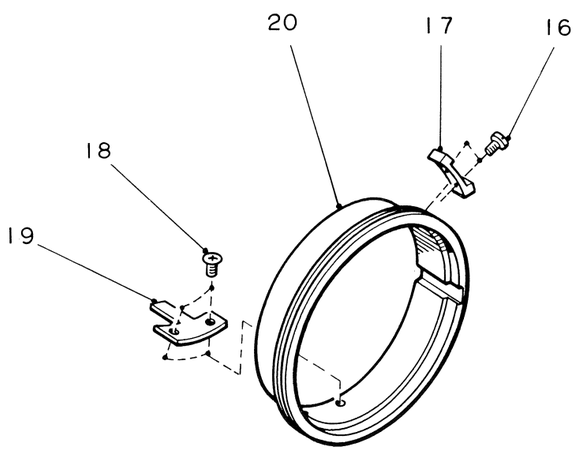

203

UC HEXANON AR 15mm F2.8 DISASSEMBLING PROCEDURES

Seq.	Parts, Sub-Ass'y to be disassembled (Fig. No.)	Description	Solvent	Exclusive Tools
1	Front lens sub-assy. (A-2)	Dismantle by universal wrench, making sure that no damage is done to the black coating on the inner wall of the front tube (A-9). 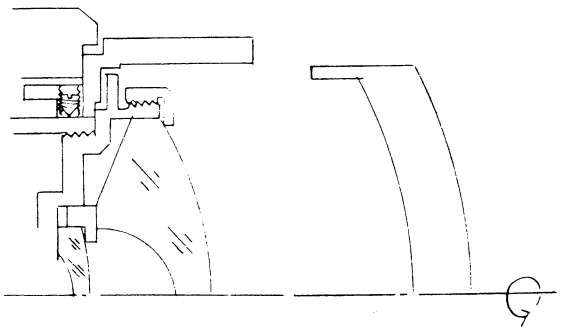		
2	Counter sunk screw (A-4) Covered ring (A-5)	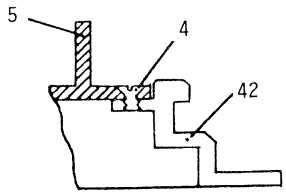 Detach three counter sunk screws (A-4), taking care not to damage split head, and then remove covered ring (A-5).		
3	Rear lens sub-assy. (A-6)	Using an exclusive wrench, detach rear lens sub-assy.		
4	Covered screw (A-7) Round head screw (A-8) Front tube (A-9) Filter change ring sub-assy. (A-10)	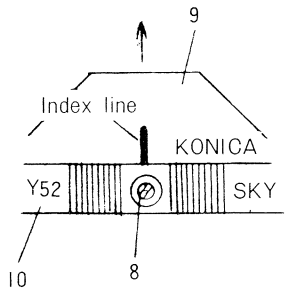 Upon removal of covered screw (A-7), mate this hole with white index line of front tube (A-9) as shown in left drawing, then round head screw (A-8) is visible in inner most part. By removing this, front tube (A-9) becomes detachable forwardly. Similarly filter change ring sub-assy. (A-10) is detachable forwardly.	T ↓ 7-(S640)-10 T ↓ 8-(S640)-9	

Seq.	Parts, Sub-Ass'y to be disassembled (Fig. No.)	Description	Solvent	Exclusive Tools
5	Set ring for filter fix base (A-11)	Detach set ring for filter base (A-11) using a universal wrench. 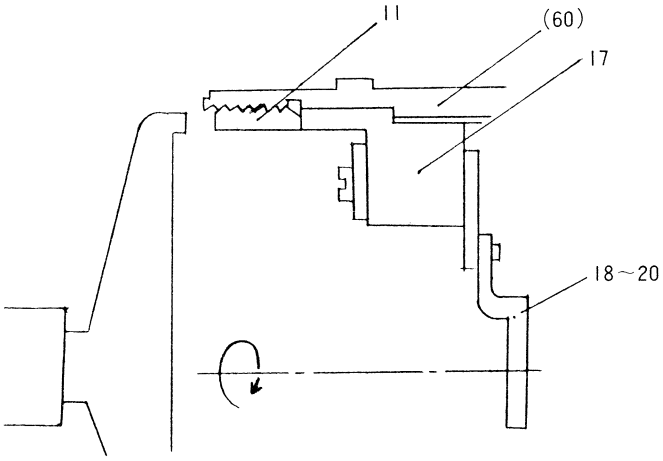	T ↓ 11-(S640)-60	
6	Connecting lever shaft (A-12) Main spring for filter (A-13) Turning spring for filter sub-assy. (A-14)	Detach connecting lever shaft (A-12) and remove main spring for filters (A-13) and turning spring for filter sub-assy. (A-14) in four locations each. 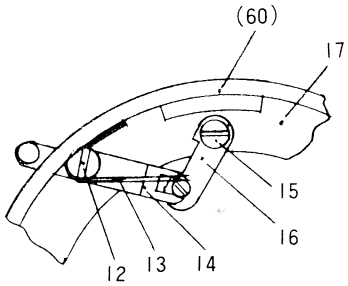		
7	Filter fix base (A-17) Set screw for filter frame arm (A-15) Filter connecting lever sub-assy. (A-16) Filter sub-assy. SKY (A-18) B8 (A-19) R60 (A-20) Y52 (A-21)	Detach filter fix base (A-17) by forwardly pulling and remove set screws for filter frame arm (A-15) and filter connecting lever sub-assy. (A-16) in four locations each then filter sub-assy. (A-18, A-21) becomes removable back-wardly. ※ At this time, confirm relative position of each filter sub-assy. If randomly assembled, inconformity of change ring index with appearing filter may arise.		

Seq.	Parts, Sub-Ass'y to be disassembled (Fig. No.)	Description	Solvent	Exclusive Tools
8	Connecting screw B (A-22)	Deploy connecting screw B (A-22) attached to outer periphery of filter fix base (A-17).	T ↓ 17-(S640)-22	
9	Focus ring leather (A-23)			
10	Round head screw (A-24) Focus ring (A-25)	Detach three round head screw (A-24) and mate projection of focus ring (A-25) with notch (A-61) to pull forwardly for detachment. ※ Use a little toluole flow to solve Sundyne 640 coated in round head screw part. 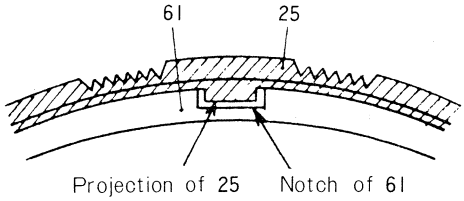 	T ↓ 24-(S640)-25	
11	Counter sunk screw (A-26)	Detach three counter sunk screws (A-26) in three locations and then push out inside tube (A-27) from back side. 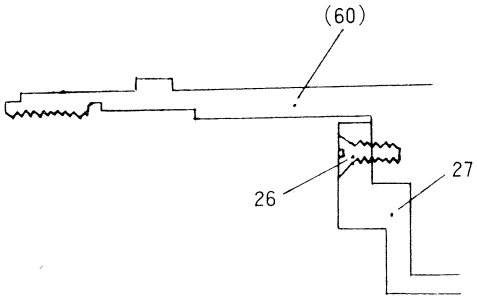 	T ↓ 26-(S640)-27	

Seq.	Parts, Sub-Ass'y to be disassembled (Fig. No.)	Description	Solvent	Exclusive Tools
12	Round head screw (A-28) Blade case sub-assy. (A-29) Bell crank roller (A-30)	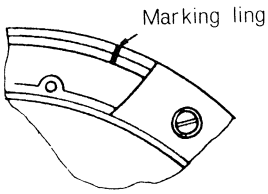 ◎ Before disassembly, • mark-off relative positions on blade case sub-assy. (A-29) and inside tube (A-27). • take care not to drop or lose bell crank roller (A-30) due to easy dropping. 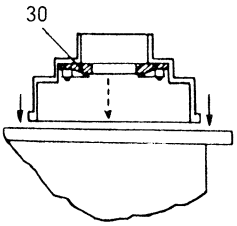 1. Remove round head screw (A-28) and give a forward shock to let it out while holding inside tube (A-27). Excessive shock or holding main ring sub-assy. (A-40) may cause flaws on sliding part with steel ball (A-39) resulting in non-smooth operation of main ring sub-assy.		
13	Flat screw (A-31) Ring limitation plate (A-32) Stud for main spring (A-33) Main spring (A-35)			
14	Flat screw (A-36) Grooved cam (A-37)	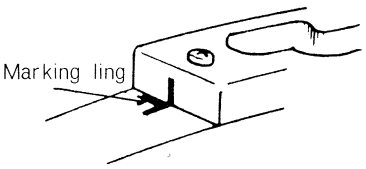 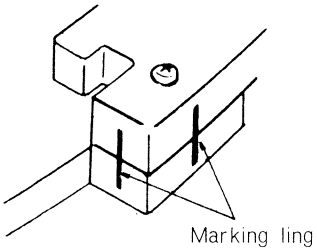 Scribe a line on grooved cam (A-37) and main ring (A-40) of their relative positions. (N.B.) The figure on the left directly relates to 50 mm F1.7, and for 15 mm F2.8, it shall be considered up side down.	T ↓ 36-(S640)-37	

Seq.	Parts, Sub-Ass'y to be disassembled (Fig. No.)	Description	Solvent	Exclusive Tools
15	Set ring A for ball (A-38) Steel ball (A-39) Main ring sub-assy. (A-40)	1. Take care not to stain steel ball (A-39) with Toluole. 2. Better use suitable working case for protection of scattering of steel balls while taking out main ring sub-assy. (A-39).	T ↓ 38-(S640)-40	
16	Counter sunk screw (A-41)	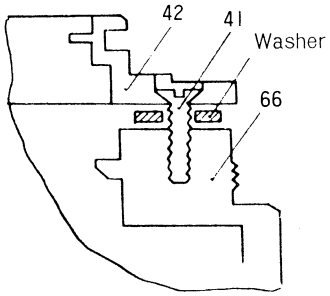 Where washer exists between mount (A-42) and outside tube (A-66) record its position. ※ Washer is used to adjust leaning of optical axis.	T ↓ 41-(S640)-52	
17	Set screw for manual stopper (A-43) Spring for manual stopper (A-44) Manual stopper sub-assy. (A-45)			
18	Ring stopper for diaphargm (A-46) Set screw for AE lock lever (A-47) AE lock spring (A-48) AE lock lever sub-assy. (A-49) AE lock button sub-assy. (A-50)	At the instant of detachment of set screw for AE lock lever (A-47) from diaphragm ring (A-52), take care not to lose (A-48), (A-49) due to their jumping out by AE lock spring (A-30). 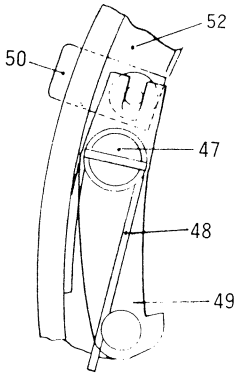		

Seq.	Parts, Sub-Ass'y to be disassembled (Fig. No.)	Description	Solvent	Exclusive Tools
19	Cap for click spring (A-51) Diaphragm ring (A-52) Click spring (A-53) Steel ball (A-54)	Despite setachment of cap for click spring (A-51), do not take out click spring (A-53) and steel ball (A-54) but instead, upon detachment of diaphragm ring (A-52), only slightly pushing steel ball by driver tip may be enough for easy taking out. (Mount side shall be positioned downwardly during works.)	T ↓ 58-(S640)-66	
20	Counter sunk screw (A-55) Click B (A-56) Click A (A-57)	Detachment is not necessary except for click plate change.		
21	Flat screw (A-58) Guide plate for helicoid(A-59)		T ↓ 58-(S640)-66	
22	Confirmation of reference point dimension	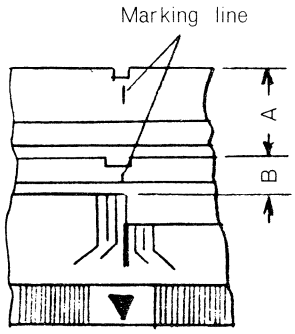 Marking line as shown in the drawing, measure and record helicoid's reference point dimensions A and B. Basic designed value are; A = 17 ± 0.2 B = 6 ± 0.2		
23	Helicoid male (A-60) Helicoid female (A-61) Outside tube (A-66)	1. Confirm each engaging position by using notches and holes there of at the time of detachment of helicoid screws with regard to helicoid male (A-60) and helicoid female (A-61), and (A-61) and outside tube (A-66). 2. Take care not to attach foreign substance to helicoid screw part during handling and storage.		

Seq.	Parts, Sub-Ass'y to be disassembled (Fig. No.)	Description	Solvent	Exclusive Tools
24	Set ring B for ball (A-62) Steel ball (A-63) Retainer (A-64) Connecting ring sub-assy. (A-65)	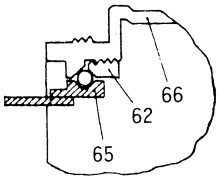 1. Do on a suitable disk to avoid ball scattering. 2. Use Toluole in optimum quantity to avoid adherence to steel ball (A-63). 3. Take care not to deform retainer which is easily deformable during handling.	[T] ↓ 62-[S640]-66	

ASSEMBLING PROCEDURES

Seq.	Parts, Sub-Ass'y to be assembled (Fig. No.)	Description	Adhesive Lubricant	Exclusive Tools
1	Set ring B for ball (A-62) Steel ball (A-63) Retainer (A-64) Connecting ring sub-assy. (A-65) Outside tube (A-66)	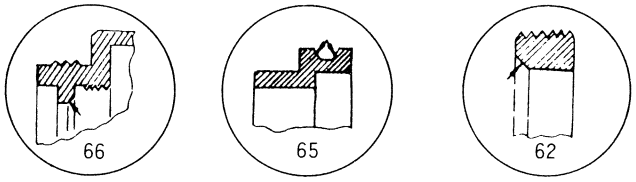 1. Confirm no flaw exists at arrowed positions as above. If any, replace it with new one. 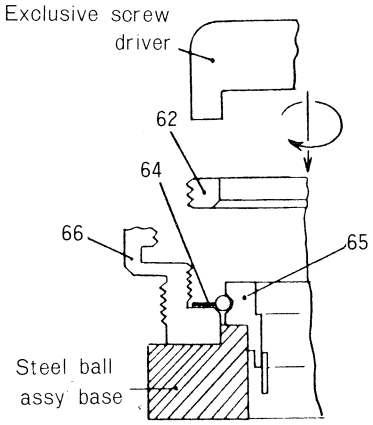 2. Put connection ring sub-assy. (A-65) on steel ball assy. base and put retainer (A-64) on outside tube (A-66) and then set it on steel ball assy base. Drop steel balls (A-63) upon notch of (A-64) and then screw in gradually set ring B for ball (A-62). 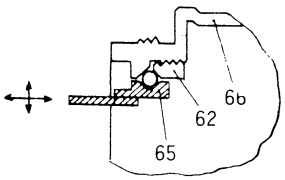 3. Assy. tolerance of (A-65); when tightening (A-62), tolerances of (A-65) shall be not more than 0.1 in all arrowed directions and movement shall be smooth. Excessive tightening of (A-62) may cause flaws at arrowed position (in step 1) and result in non-smooth operation. 4. Coating of glue. Do not coat Sundyne 640 on (A-63) as shown in the drawing hereunder. 5. Do not coat any kind of oil on retainer (A-64). Take same caution at arrowed positions of step 1 contacting steel ball.	62-(S640)-66	

Seq.	Parts, Sub-Ass'y to be assembled (Fig. No.)	Description	Adhesive Lubricant	Exclusive Tools
		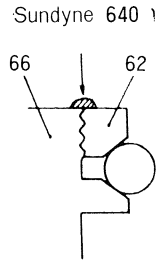 Coat Sundyne 640 on three positions on peripheries. 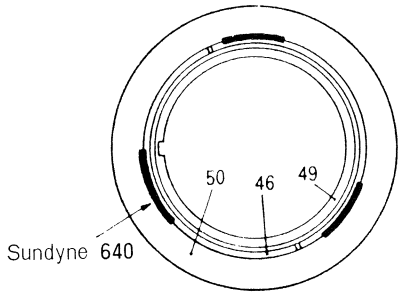		
2	Helicoid male (A-60) Helicoid female (A-61) Outside tube (A-66)	1. Assemble according to positions of screw engagement at disassembly. 2. Refer to reference point dimensions recorded before disassembly. 3. Confirm smooth helicoid movement.	60-Ⓖ-61 -Ⓖ-66	
3	Flat screw (A-58) Guide plate for helicoid (A-59)	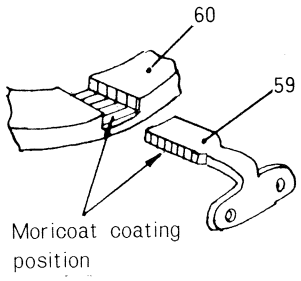 1. Keep assembly tolerance between helicoid male (A-60) and guide plate for helicoid at minimum as far as helicoid moves smoothly. 2. After assembly, confirm smooth movement of helicoid by trial operation. Take care not to detach (A-59) out of slot of (A-60). 3. After confirmation of helicoid movement, wipe excess oil oozed out of helicoid screw.	59-Ⓖ-60 58-〔S640〕-59	
4	Counter sunk screw (A-55) Click plate B (A-56) Click plate A (A-57)	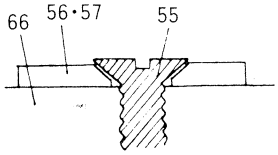 Do not allow counter sunk screw to protrude (A-51) beyond the surface of click plate (A-56, 57).	55-〔S640〕-66 56-Ⓔ 57-Ⓔ	

Seq.	Parts, Sub-Ass'y to be assembled (Fig. No.)	Description	Adhesive Lubricant	Exclusive Tools
5	Diaphragm ring (A-52)	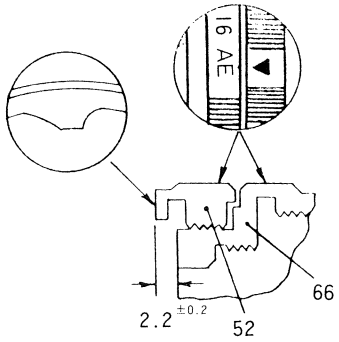 Engage by screwing until diaphragm ring (A-52) abouts outside tube (A-66) and then return it up to the position shown above (mating position of and AE). At this time it shall conform to dimensions as shown.	52-Ⓖ-66	
6	Set screw for manual stopper (A-43) Set spring for manual stopper (A-44) Manual stopper sub-assy. (A-45) Stopper for diaphragm ring (A-46)	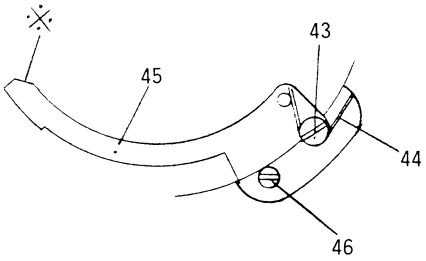 At ※ mark, manual diaphragm is regulated. If cut ····· diaphragm dia becomes smaller. If restriked····larger.	43-〔S640〕-52	

Seq.	Parts, Sub-Ass'y to be assembled (Fig. No.)	Description	Adhesive Lubricant	Exclusive Tools
7	Set screw for AE lock lever (A-47) AE lock spring (A-48) AE lock lever sub-assy. (A-49) AE lock button sub-assy. (A-50)	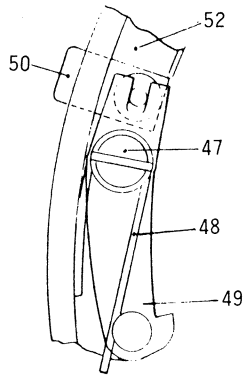 Do not use lubricant to holes accommodating AE lock button sub-assy (A-50) of diaphragm ring (A-52) and to parts assembled in this process, to avoid transdation of oil. AE lock rattling is regulated by restriking claws of AE lock lever sub-assy.		
8	Steel ball (A-54) Click spring (A-53) Cap for click spring (A-51)	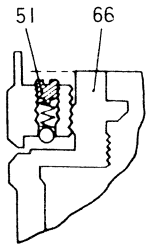 1. Regulate strength of click spring by screwing quantity of cap of click spring (A-51). 2. Do not protrude head of (A-51) beyond (A-66).	51-(S640)-52	
9	Counter sunk screw (A-41) Mount sub-assy. (A-42)	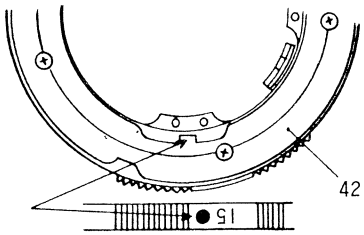 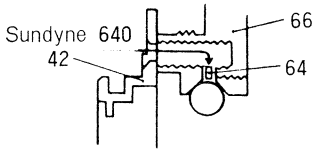 1. Assemble according to record made at disassembly where regulating washer is employed. 2. Position of mount sub-assy. (A-42) shall be such that notch lies closely to red mark (round) of outside tube. 3. Take care not to change excess Sundyne 640 used for locking counter sunk screw (A-41) into screw holes to avoid causing connecting ring (A-65) malfunction due to adhesion to retainer (A-64).	41-(S640)-66	

Seq.	Parts, Sub-Ass'y to be assembled (Fig. No.)	Description	Adhesive Lubricant	Exclusive Tools
10	Inside tube (A-27) Main ring sub-assy. (A-40) Set ring for ball (A-38) Steel ball (A-39)	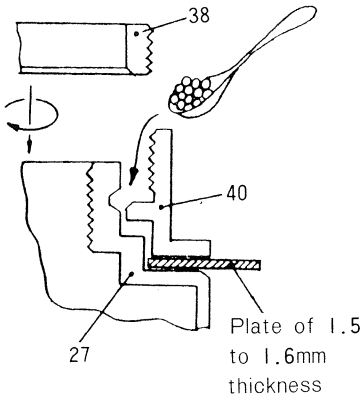 Insert plate of 1.5 to 1.6 mm thickness between inside tube (A-27) and main ring sub-assy. (A-40), charge steel balls around whole periphery as shown in set ring A for ball (A-38) gradually. Take marginal space for two balls all over periphery (keep rattling minimum within smooth operation).	38-〔S640〕-40	
11	Flat screw (A-31) Ring limitation plate (A-32) Stud for main spring (A-33) Main spring (A-35)	Apply Moricoat all over contact part of main spring (A-35) of main ring sub-assy. (A-40).	27-〔S640〕-31 27-〔S640〕-33 35-Ⓜ-40	
12	Blade case sub-assy. (A-29) Round head screw (A-28)	1. Assembly according to the marking line marked at the time of disassembly. 2. Over tightening of round head screw may cause inside tube deformation and inadaptability to helicoid male (A-60).	28-〔S640〕-27	

Seq.	Parts, Sub-Ass'y to be assembled (Fig. No.)	Description	Adhesive Lubricant	Exclusive Tools
13	Bell crank roller (A-30) Grooved cam (A-37) Flat screw (A-36)	1. Attach bell crank roller (A-30). 2. Attach grooved cam (A-37) accordingly to marking line made at disassembly. 3. Use a screw driver with the following when making checks of diaphragm openings. Unit: mm		

F No.	2.8	4	5.6	8	11	16
Reference diameter	13.3 ~ 12.2	10.0 ~ 7.9	7.0 ~ 5.6	4.9 ~ 3.9	3.5 ~ 2.8	2.5 ~ 2.0

4. Method of diaphragm diameter regulation

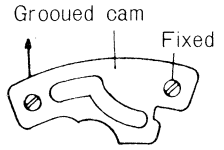

Open side becomes larger (if reverse to the arrow, smaller).

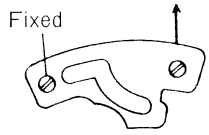

Minimum diaphragm diameter becomes larger (if reverse to the arrow, smaller).

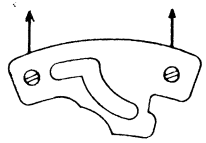

Whole from minimum diaphragm diameter to open becomes larger (if reverse to the arrow, smaller).

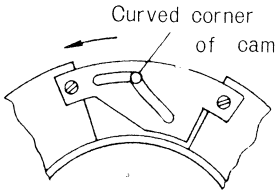

5. Upon fixing grooved cam (A-37), confirm smooth operation of main ring (A-40), especially smoothness at bent part of cam.

When turning gradually to the arrowed direction, ones that fully stop or temporarily stop may cause non-smooth operation.

6. When shift of grooved cam is not enough for regulation, turn whole blade case sub-assy. to the left or right.

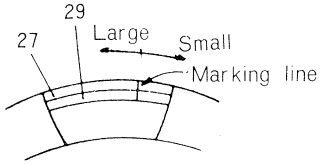

Seq.	Parts, Sub-Ass'y to be assembled (Fig. No.)	Description	Adhesive Lubricant	Exclusive Tools
14	Helicoid male (A-60) Inside tube (A-27) Counter sunk screw (A-26) Rear lens sub-assy. (A-6)	1. Screw in rear lens sub-assy. (A-6) into inside tube (A-27). 2. Mate diaphragm dial with F16, establish reference point dimension and thus engage inside tube (A-27) and tighten it with counter sunk screw (A-26) from front side. At this moment confirm connecting of main ring sub-assy. (A-40) is engaging in solt of connecting sub-assy. 3. Check diaphragm diameter. (if incorrect, regulate in accordance with assembly procedure 6 (manual diaphragm) and 13 (auto diaphragm).	26-(S640)-60	
15	Round head screw (A-24) Focus ring (A-25)	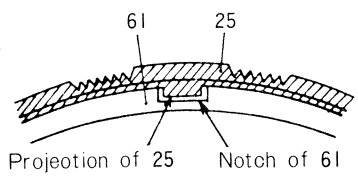 1. Assemble by mating notch of helicoid female (A-61) with focus ring projection. 2. Turn only (A-61) and bring helicoid in most advanced state. Set it temporarily by round head screw (A-24) at that position.	24-(S640)-25	

Seq.	Parts, Sub-Ass'y to be assembled (Fig. No.)	Description	Adhesive Lubricant	Exclusive Tools
16	Set screw for filter frame arm (A-15) Filter connecting lever sub-assy. (A-16) Filter fix base (A-17) Filter sub-assy.-SKY (A-18) Filter sub-assy.-B8 (A-19) Filter sub-assy.-R60 (A-20) Filter sub-assy.-Y52 (A-21) Connecting screw B (A-22)	Assembly each filter in relative position confirmed at the time of disassembly. In this condition, confirm if each filter cam operate smooth without being obstructed by filter mounting base. Also confirm no excessive backlash exists (if too much, it may cause filter contact with blade). 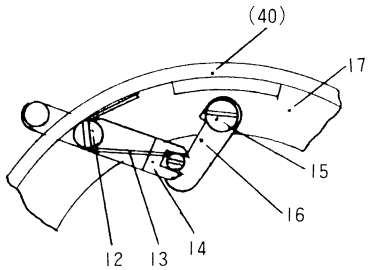		

Seq.	Parts, Sub-Ass'y to be assembled (Fig. No.)	Description	Adhesive Lubricant	Exclusive Tools
17	Helicoid male (A-60) Filter fix base (A-17) connecting lever shaft (A-12) Main spring for filter (A-13) Turning lever for filter sub-assy. (A-14) Set ring for filter fix base (A-11)	1. Insert connecting screw B (A-22) provided on outer periphery of filter mount base into slit on inner periphery of helicoid male (A-60) and push it until it reaches mating part. 2. Fasten by set ring for filter mount base (A-11). 3. Mate fork tip of turning lever for filter sub-assy (A-14) with caulking dowel of connecting lever for filter sub-assy. (A-11) and fix it by connecting lever shaft (A-12) via main spring for filter (A-13). 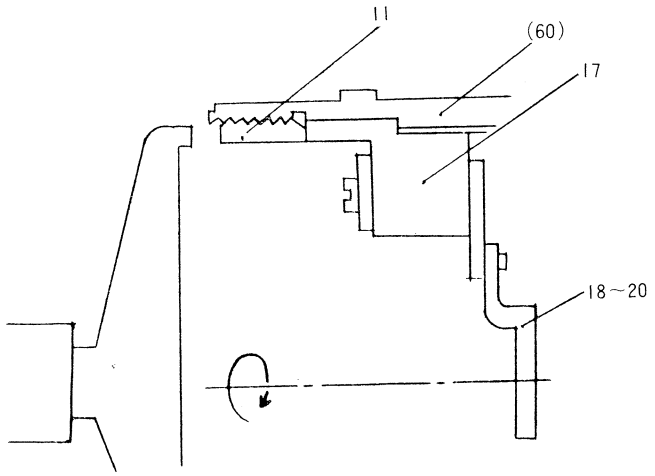		

Seq.	Parts, Sub-Ass'y to be assembled (Fig. No.)	Description	Adhesive Lubricant	Exclusive Tools
18	Covered screw (A-7) Round head screw (A-8) Front tube (A-9) Filter change ring sub-assy. (A-10)	1. Assemble with face of the cam for filter change ring sub-assy. (A-10) down. 2. Assemble mating projection on inner periphery of front tube (A-9) with slot on tip of helicoid male. 3. Match hole of filter change ring sub-assy. with index line of front tube and therefrom fasten round head screw (A-8) to mount front tube in position. 4. Confirm if required filter appears by matching each engraved position of filter change ring sub-assy. with the index line of front tube. Insufficient or excessive filter appearance can be corrected as shown hereunder. 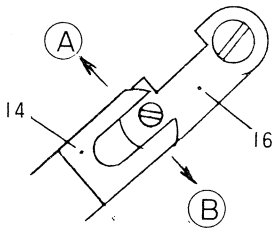 When turning lever for filter sub-assy. (A-14) is; turned to A filter appears, and turned to B filter disappears.		
19	Counter sunk screw (A-4) Covered ring (A-5)	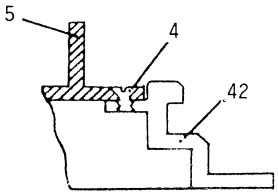 The covered ring (A-5) and counter sunk screw (A-4) must be protruding from the last surface of the mount (A-42).		
20	Front lens sub-assy. (A-2)	Screw in front lens sub-assy. gradually whole taking care not to damage black painted surface on inner periphery of front tube (A-9). 1. Before assembly, wipe inside of body tube after making blade operate. 2. While assembly outside tube (A-66), assembly is carried out. 3. Check no dust exists in front or rear of diaphragm blade after assembly.		

Seq.	Parts, Sub-Ass'y to be assembled (Fig. No.)	Description	Adhesive Lubricant	Exclusive Tools
21	∫∫ regulation Leather for focus ring (A-23)	1. Set focus ring stationary and determine focus position. 2. Upon obtained it, release temporarily set round head screw (A-24). 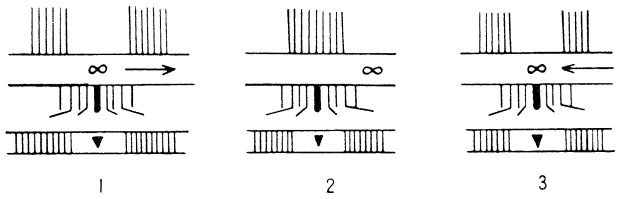 3. Turn focus ring to finally set at position as shown above while keeping helicoid female stationary. 4. Insert leather for focus ring (A-23).		

HEXANON AR

21 mm F2.8 (Automatic)

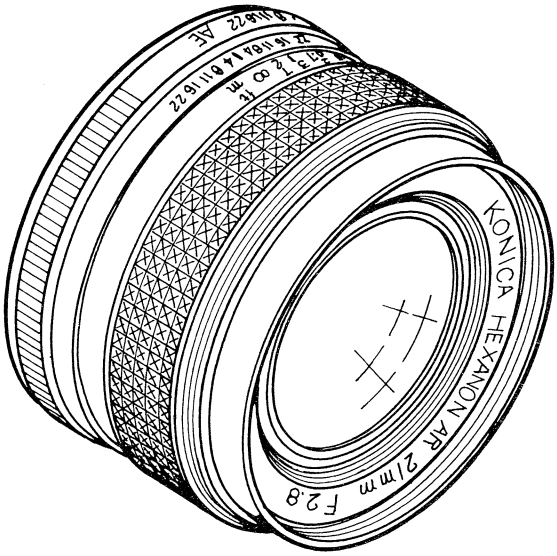

HEXANON AR

21mm F2.8 (Automatic)

MODEL No. 3335

1	2	3	4	5
Fig. No.	Parts No. or Sub-assembly	部品・部組名称	Parts name or Sub-assembly name	Note
A-1	501	レンズキャップ部組	Lens cap sub-assy	
	×07501	レンズキャップ	Lens cap	
	×07502	レンズキャップバネ	Lens cap spring	
	×07503	銘　板	Name plate	
	×07504	補助スプリング	Auxiliary spring	
A-2	07951	彫刻リング	Engraved ring	
A-3	61604	2.0φ×4.5 ナベ小ネジ	2.0φ×4.5 Plus pan head screw	〔S640〕-07311
A-4	07311	前　筒	Front tube	
A-5	61584	2,0φ×3.5 ナベ小ネジ	2.0φ×3.5 Plus pan head screw	〔S640〕-07952
A-6	701	前群レンズ部組	Front lens sub-assy	
	×07952	前鏡枠	Front lens barrel	
	×07953	1番玉押えリング	Set ring for No.1 lens	〔S640〕-07952
	×07954	2番玉押えリング	Set ring for No.2 lens	〔S640〕-07952
	×07955	4番玉押えリング	Set ring for No.4 lens	〔S640〕-07952
	×07956	5番玉押えリング	Set ring for No.5 lens	〔S640〕-07952
	×07901	第1レンズ	No.1 lens	
	×07902	第2レンズ	No.2 lens	
	×07903	第3レンズ	No.3 lens	
	×07904	第4レンズ	No.4 lens	
	×07905	第5レンズ	No.5 lens	
A-7	07511	マウントキャップ	Lens mount cap	
A-8	07407	化粧リング止めネジ	Set screw for covered ring	〔S640〕-07401
A-9	07403	化粧リング	Covered ring	
A-10	07984	後鏡枠押えリング	Set ring for rear lens barrel	〔S640〕-07151
A-11	702	後群レンズ部組	Rear lens sub-assy	
	×07981	後鏡枠	Rear lens barrel	
	×07982	間隔リング	Spacer ring	
	×07983	9番玉押えリング	Set ring for No.9 lens	〔S640〕-07981

HEXANON AR

21mm F2.8 (Automatic)

MODEL No. 3335

1	2	3	4	5
Fig. No.	Parts No. or Sub-assembly	部品・部組名称	Parts name or Sub-assembly name	Note
	×07906	第6レンズ	No.6 lens	
	×07907	第7レンズ	No.7 lens	
	×07908	第8レンズ	No.8 lens	
	×07909	第9レンズ	No.9 lens	
A-12	07985	ピント調整座金t=0.05	Regulating washer t=0.05 for focus	
	07986	ピント調整座金t=0.02	Regulating washer t=0.02 for focus	
A-13	07219	フォーカスリング光皮	Focus ring leather	
A-14	07209	フォーカスリング止めネジ	Set screw for focus ring	〔S640〕-07217
A-15	07217	フォーカスリング	Focus ring	
A-16	61584	2.0φ×3.5 ナベ小ネジ	2.0φ×3.5 Plus pan head screw	〔S640〕-07118
A-17	07118	固定絞り	Fixed diaphragm	
A-18	07101	羽根ケース	Blade case	
A-19	109	絞り羽根部組	Diaphragm blade sub-assy	
	×07111	絞り羽根	Diaphragm blade	
	×07112	羽根ダボ	Diaphragm blade dowel	
A-20	07102	駆動リング	Turning ring	
A-21	63489	1.7φ×5.0 皿小ネジ	1.7φ×5.0 Counter sunk screw	〔S640〕-07203
A-22	401	マウント部組	Lens mount sub-assy	
	×07401	マウント	Lens mount	
	×07402	マウント制限ピン	Mount limitation pin	〔S640〕-07401
A-23	07301	絞りリング	Diaphragm ring	
A-24	51209	20φ 鋼球	2.0φ steel ball	Ⓜ-07203
A-25	07326	AEロックバネ	A.E lock spring	
A-26	07322	AEロックレバー軸	Shaft for A.E lock lever	
A-27	07321	AEロックレバー	A.E lock lever	
A-28	07305	クリックバネ	Click spring	Ⓜ-51209
A-29	07306	クリックバネ柱	Stud for click spring	

HEXANON AR

21mm F2.8 (Automatic)

MODEL No. 3335

1	2	3	4	5
Fig. No.	Parts No. or Sub-assembly	部品・部組名称	Parts name or Sub-assembly name	Note
A-30	65264	1.4φ×1.6 ナベ小ネジ	1.4φ×1.6 Plus pan head screw	〔S640〕-07206
A-31	07206	深度目盛りリング	Depth of field scale ring	
A-32	07159	作動バネ	Main spring	Ⓜ-07210
A-33	65284	1.4φ×2.0 ナベ小ネジ	1.4φ×2.0 Plus pan head screw	
A-34	07164	作動バネかけ	Plate for main spring	〔S640〕-07401
A-35	07215	ボール押え枠	Set ring for steel ball	〔S640〕-07401
A-36	51160	1.6φステンレス球	1.6φ stainless steel ball	
A-37	203	接続リング部組	Connection ring sub-assy	
	65324	1.4φ×3.0 ナベ小ネジ	1.4φ×3.0 Plus pan head screw	〔S640〕-07231
	×07231	本体接続板	Connection plate	
	65324	1.4φ×3.0 ナベ小ネジ	1.4φ×3.0 Plus pan head screw	〔S640〕-07212
	×07212	接続レバー	Connection lever	
	×07210	接続リング	Connection ring	
A-38	61444	1.7φ×3.0 ナベ小ネジ	1.7φ×3.0 Plus pan head screw	〔S640〕-07204
A-39	07204	直道案内板	Guide plate for helicoid	Ⓖ-07151
	202	ヘリコイド部組	Helicoid sub-assy	
A-(40)	×07151	中　胴	Inside tube	Ⓖ-07202
A-(41)	×07202	ヘリコイド雌	Helicoid female	Ⓖ-07151,07203
A-(42)	×07203	取付座	Outside tube	Ⓖ-07202

HEXANON AR

21 mm F 2.8 (Automatic)

A

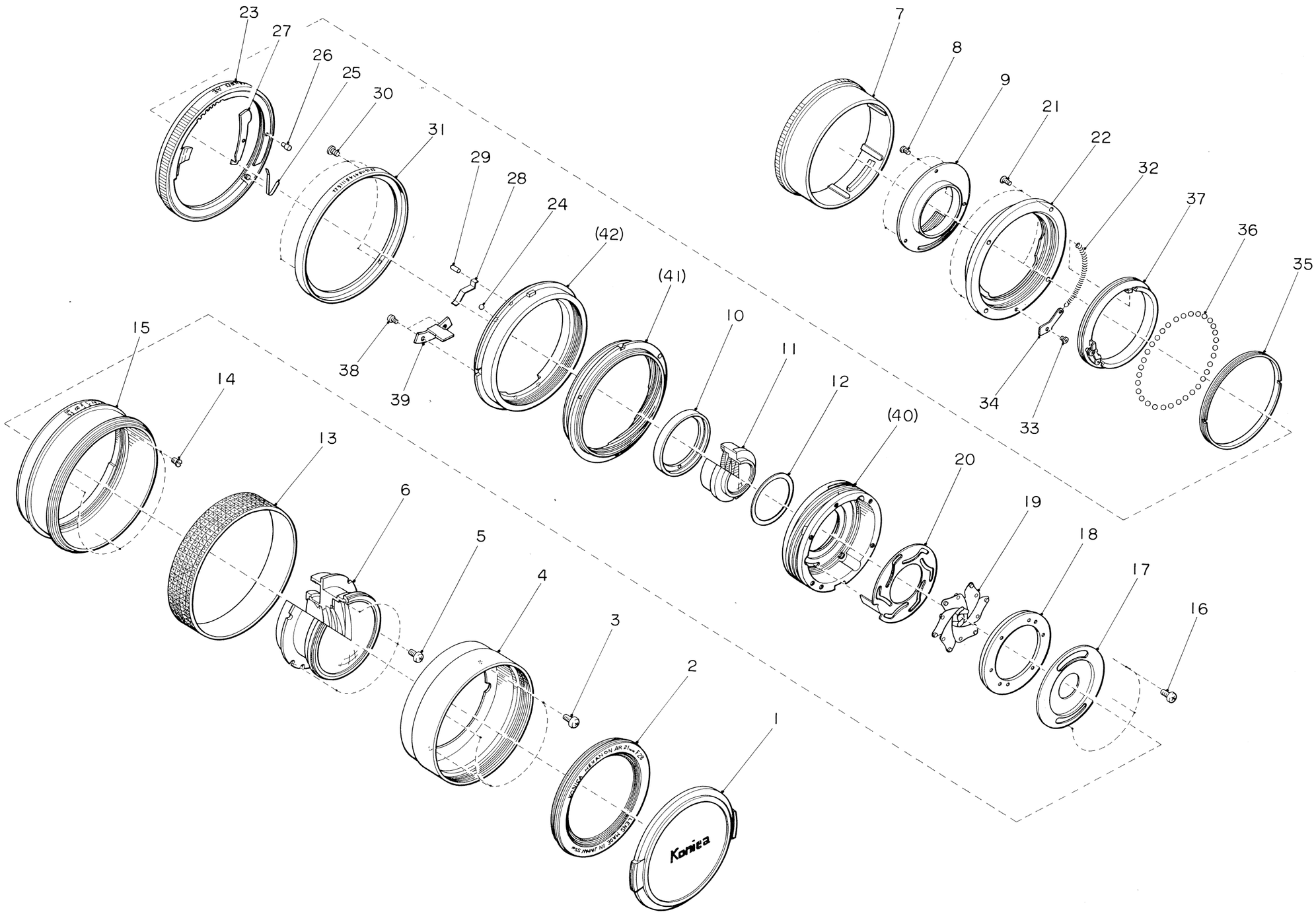

HEXANON AR

21 mm F2.8 (Automatic)

MODEL No. 3335

1	2	3	4	5
Fig. No.	Parts No. or Sub-assembly	部品・部組名称	Parts name or Sub-assembly name	Note
	203	接続リング部組	Connection ring sub-assy	
B-1	65324	1.4φ×3.0 ナベ小ネジ	1.4φ×3.0 Plus pan head screw	〔S640〕-07231
B-2	X07231	本体接続板	Connection plate	
B-3	65324	1.4φ×3.0 ナベ小ネジ	1.4φ×3.0 Plus pan head screw	〔S640〕-07212
B-4	X07212	接続レバー	Connection lever	
B-5	X07210	接続リング	Connection ring	
	401	マウント部組	Lens mount sub-assy	
B-6	X07401	マウント	Lens mount	
B-7	X07402	マウント制限ピン	Mount limitation pin	〔S640〕-07401

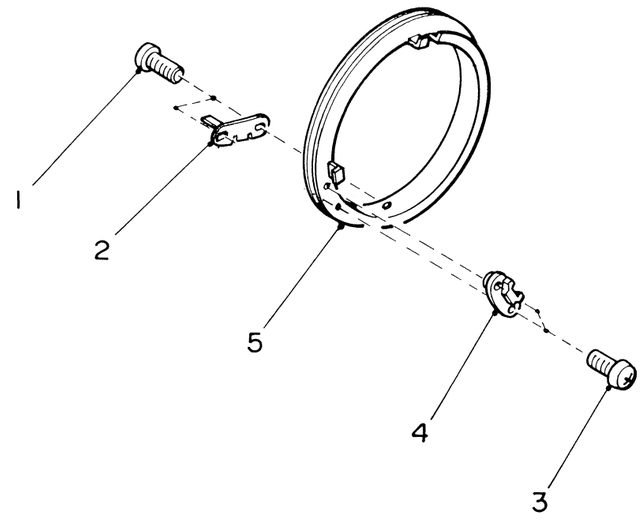

203

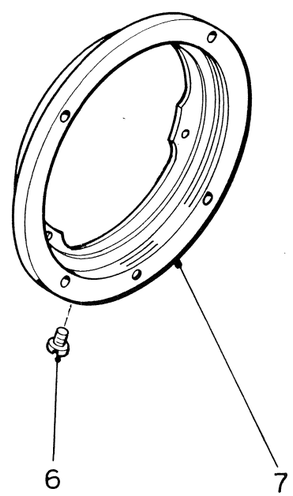

401

DISASSEMBLING PROCEDURES

Seq.	Parts, Sub-Ass'y to be disassembled (Fig. No.)	Description	Solvent	Exclusive Tools
1	Engraved ring (A-2) Pan head screw (A-3) Front tube (A-4) Pan head screw (A-5) Front lens sub-assy (A-6)	1. Remove the engraved ring (A-2) by turning a rubber turning tool counter-clockwise. 2. Remove the front tube (A-4) with three pan head screws (A-3) removed. Also, the front lens sub-assy can be dismounted by removing three other pan head screws (A-5). 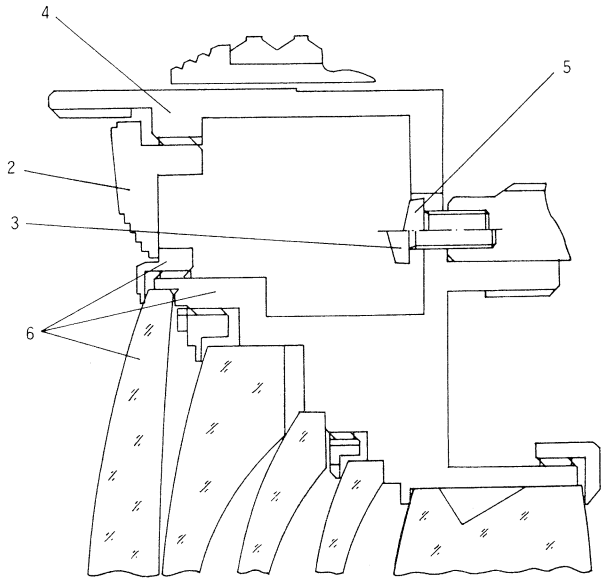 	T ↓ 3-(S640)-4 T ↓ 5-(S640)-6	
2	Set screw for covered ring (A-8) Covered ring (A-9) Set ring for rear lens barrel (A-10) Rear lens sub-assy (A-11) Regulating washer (A-12)	1. Even when the set screw for covered ring (A-8) is removed, the covered ring (A-9) is bonded to the lens mount sub-assy (A-22) in some cases. 2. Before removing the set ring for rear lens barrel (A-10), scribe a line in the position shown below. (The rear lens sub-assy A-11 is engaged for eliminating runout).	T ↓ 9-(S640)-22	

DISASSEMBLING PROCEDURES

Seq.	Parts, Sub-Ass'y to be disassembled (Fig. No.)	Description	Solvent	Exclusive Tools
		3. When the set ring for rear lens barrel (A-10) is removed with a universal driver inserted in its notch portion, the rear lens sub-assy (A-11) and regulating washer (A-12) can be removed. 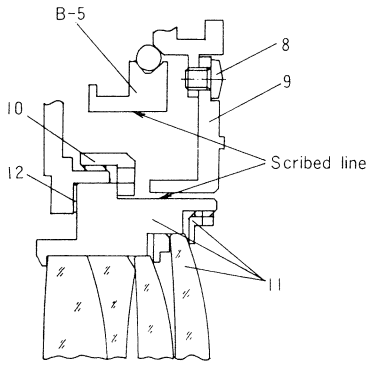 Note: One piece of regulating washer (A-12) is standard (t=0.05).	T ↓ 10-(S640)-40	
3	Focus ring leather (A-13) Set screw for focus ring (A-14) Focus ring (A-15)	1. Mark a scribed line in the position shown at right so that position relations between the focus ring (A-15) and the helicoid female (A-41) can be determined for ease of reassembly. 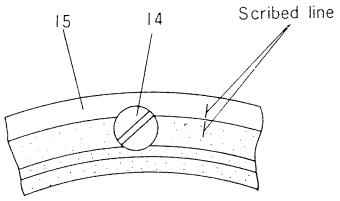 2. The focus ring leather (A-13) needs not be removed except when deemed absolutely necessary.	T ↓ 14-(S640)-15	
4	Pan head screw (A-16) Fixed diaphragm (A-17) Blade case (A-18) Diaphragm blade sub-assy (A-19) Turning ring (A-20)	1. Prior to disassembly, scribe a line in the position shown so that relationship among fixed diaphragm (A-17), blade case (A-18), and inside tube (A-40) can be established when making reassembly. Incidnetally, upper diaphragm be kept poen for preventing the diaphragm blade sub-assy (A-19) from come off. 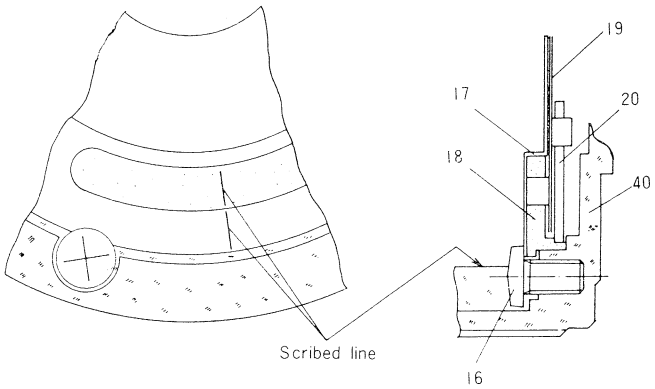 	T ↓ 16-(S640)-17	

DISASSEMBLING PROCEDURES

Seq.	Parts, Sub-Ass'y to be disassembled (Fig. No.)	Description	Solvent	Exclusive Tools
		2. Remove pan head screw (A-16), put the front lens down, and remove the fixed diaphragm (A-17) blade case (A-18), diaphragm blade sub-assy (A-19), and turning ring (A-20) carefully. 3. Before removing the turning ring (A-20), scribe a line so that position relationship with the blade case (A-18) can be re-established in the open state for ease of reassembly. 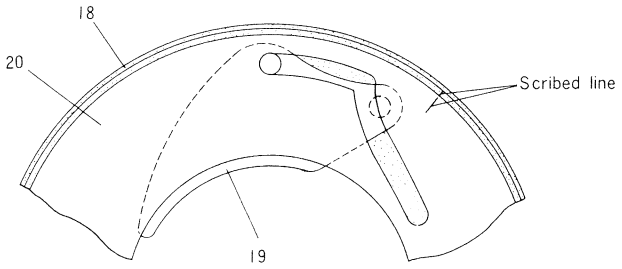		
5	Countersunk screw (A-21) Lens mount sub-assy (A-22) Diaphragm ring (A-23) Steel ball (A-24) AE lock spring (A-25) Shaft for AE lock lever (A-26) AE lock lever (A-27) Click spring (A-28) Stud for click spring (A-29)	1. Set diaphragm ring (A-23) for F22 and then remove the lens mount sub-assy (A-22) diaphragm ring (A-23) and all the rest listed in the order mentioned. 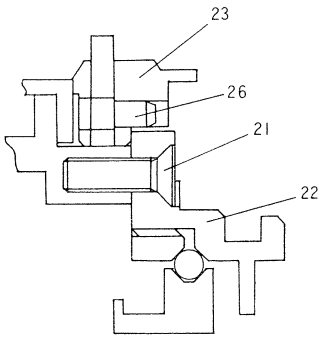 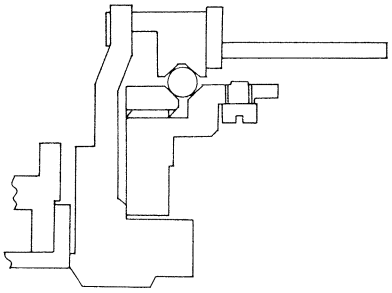	T ↓ 21-(S640)-42	

DISASSEMBLING PROCEDURES

Seq.	Parts, Sub-Ass'y to be disassembled (Fig. No.)	Description	Solvent	Exclusive Tools
		2. The shaft for AE lock lever (A-26) is driven to the diaphragm ring (A-23). So push it out of the mount side using a narrow tipped pin. 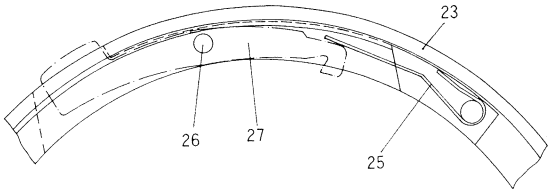 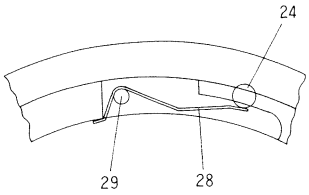		
6	Pan head screw (A-30) Depth of field scale ring (A-31)	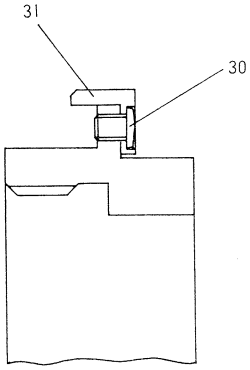	T ↓ 30-(S640)-31	
7	Main spring (A-32) Pan head screw (A-33) Plate for main spring (A-34) Set ring for steel ball (A-35)	To remove the set ring for steel ball (A-35), do so in a suitable receptacle or container so as to prevent the stainless steel ball (A-36) from being lost. 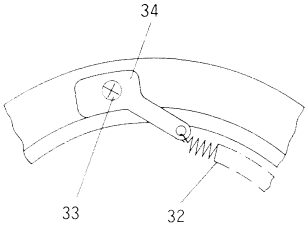	T ↓ 22-(S640)-34 T ↓ 22-(S640)-35	

DISASSEMBLING PROCEDURES

Seq.	Parts, Sub-Ass'y to be disassembled (Fig. No.)	Description	Solvent	Exclusive Tools
8	Stainless steel ball (A-36) Connection ring sub-assy (A-37)	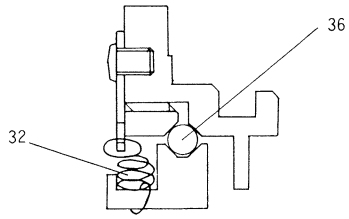 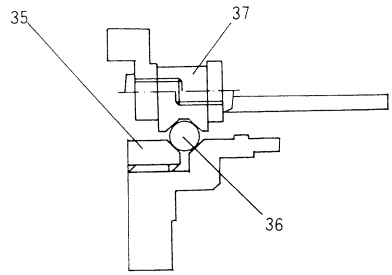		
9	Pan head screw (A-38) Guide plate for helicoid (A-39) Inside tube (A-40) Helicoid female (A-41) Outside tube (A-42)	1. Before disassembly, dimension A and dimension B have to be recorded with guide plate for helicoid (lower position) of the inside tube (A-40), notch of helicoid female (A-41), and prorusion (upper position) of outside tube (A-42) used as a yardstick. Standard dimension: Dimension A = 2.4mm B = 7.6mm 2. Confirm the mutually engaged position at which the inside tube (A-40) and helicoid screw of the helicoid female (A-41) are just about to come out of each other using the notched hole of these parts. 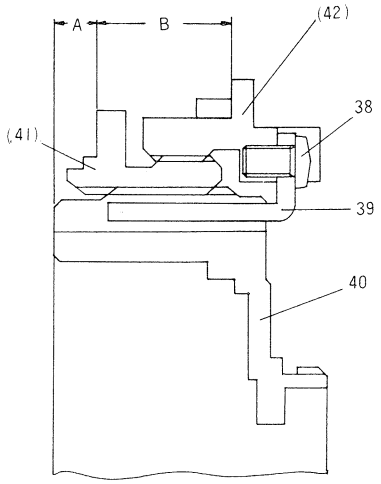	T ↓ 38-(S640)-39	

ASSEMBLING PROCEDURES

Seq.	Parts, Sub-Ass'y to be assembled (Fig. No.)	Description	Adhesive Lubricant	Exclusive Tools
1	Lens mount sub-assy (A-22) Connection ring sub-assy (A-37) Stainless steel ball (A-36) Set ring for steel ball (A-35) Plate for main spring (A-34) Pan head screw (A-33) Main spring (A-32)	1. Check to ensure that no bruise or scratch on the stainless steel ball (A-36) sliding surface (arrow marked point) of lens mount sub-assy (A-22), connection ring sub-assy (A-37), and set ring for steel ball (A-35). If any damage is found, replace such parts with new ones. 2. Put the lens mount sub-assy (A-22) and connection ring sub-assy (A-37) on the steel ball assy base, allow stainless steel balls (A-36) to be flowed into them, and carefully tighten setscrews. 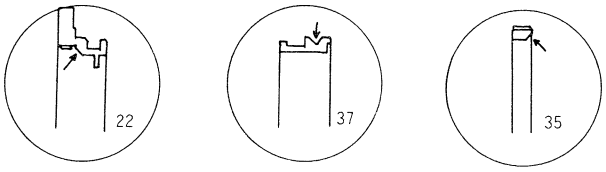 3. Number of steel balls put in should be two or so minus those required to fill the entire circumference, that is, about 80 pieces. 4. A gap created at the time of assembly of connection ring sub-assy (A-37) should be such that it smoothly moves within 0.1mm range in both directions shown by an arrow, when the set ring for steel ball (A-35) is fastened. Do not overly tighten the set ring for steel ball (A-35) or damage to the arrow marked point (see item 1 above), resulting in unsmooth operation. 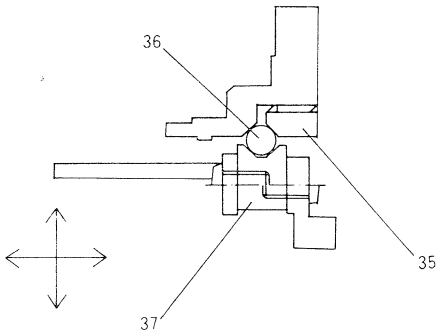 	22-[S640]-35	

ASSEMBLING PROCEDURES

Seq.	Parts, Sub-Ass'y to be assembled (Fig. No.)	Description	Adhesive Lubricant	Exclusive Tools
		5. Apply Sundine 640 to the three points on the circumference. 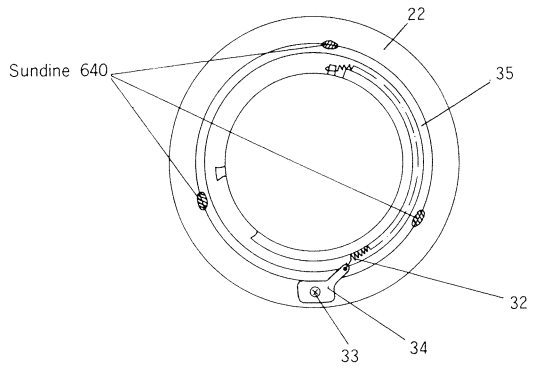 		
		Keep the mount unit so far assembled until Step 4.		
2	Outside tube (A-42) Helicoid female (A-41) Inside tube (A-40) Guide plate for helicoid (A-39) Pan head screw (A-38)	1. Assemble helicoid female (A-41) and inside tube (A-40) with the outside tube (A-42), making sure that they are fitted to dimensions A and B recorded before disassembly. 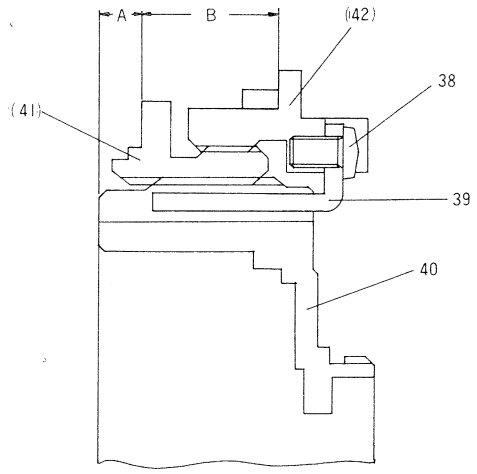 	41-Ⓖ-42 40-Ⓖ-41 38-〔S640〕-39	
		2. Apply helicoid grease to both sides of the guide plate for helicoid (A-39) and mount it on the inside tube (A-40).	39-Ⓖ-40	

ASSEMBLING PROCEDURES

Seq.	Parts, Sub-Ass'y to be assembled (Fig. No.)	Description	Adhesive Lubricant	Exclusive Tools
		3. Operate the helicoid more than ten times to remove excess grease. 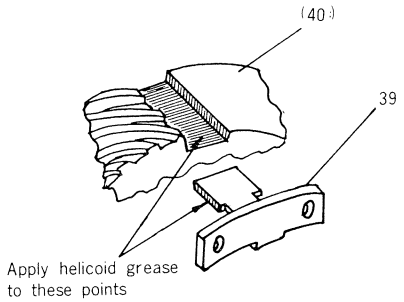		
3	Depth of field scale ring (A-31) Pan head screw (A-30)	Set the depth of field scale ring (A-31) to the pan head screw (A-30) with its center index line (broader red line) matched to the protrusion (upper position) of the outside tube (A-42). 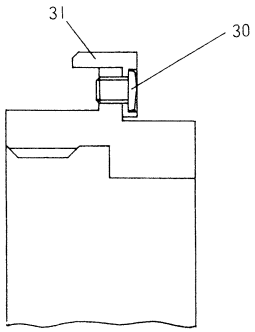	30-〔S640〕-31	
4	Stud for click spring (A-29) Click spring (A-28) AE lock lever (A-27) Shaft for AE lock lever (A-26) AE lock spring (A-25) Steel ball (A-24)	1. Assemble stud for click spring (A-29), click spring (A-28) and steel ball (A-24) as shown and in the order mentioned. 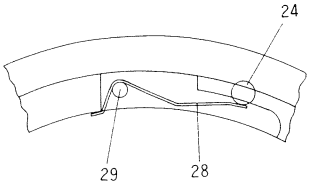 2. Assemble AE lock lever (A-27), Shaft for AE lock lever (A-26), and AE lock apring (A-25) to the diaphragm ring (A-23) as shown.	23-Ⓜ-24	

ASSEMBLING PROCEDURES

Seq.	Parts, Sub-Ass'y to be assembled (Fig. No.)	Description	Adhesive Lubricant	Exclusive Tools
	Diaphragm ring (A-23) Lens mount sub-assy (A-22) Countersunk screw (A-21)	3. Mount the diaphragm ring (A-23) in the outside tube (A-42) with Molycoat applied to the inside diameter of the said ring and click groove set to the steel ball (A-24). Confirm click operation and AE lock operation. 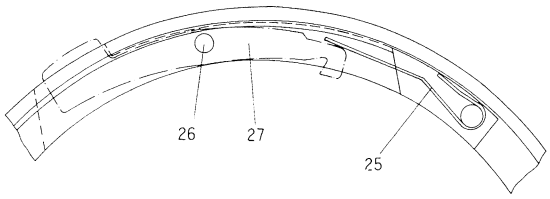 4. Mount the lens mount sub-assy (A-22) and connection ring sub-assy (A-37) assembled in Step 1 above in the position where the inside concave portion of diaphragm ring (A-23) is fully inserted into the notch portion (100°) of the connection ring and where 3mm wide groove matches with the red index of the depth of field scale ring (A-31). 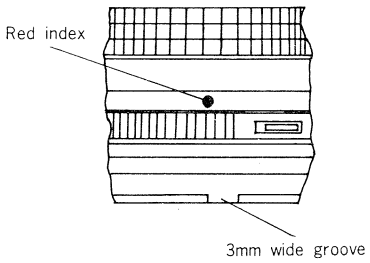 	21-(S640)-42	
5	Turning ring (A-20) Diaphragm blade sub-assy (A-19) Blade case (A-18) Fixed diaphragm (A-17) Pan head screw (A-16)	1. Assemble the diaphragm blade sub-assy (A-19) into the blade case (A-18) and mount the turning ring (A-20) in the position inscribed at the time of disassembly. 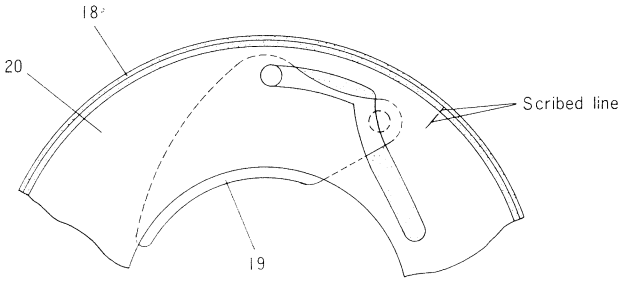 	16-(S640)-17	

ASSEMBLING PROCEDURES

Seq.	Parts, Sub-Ass'y to be assembled (Fig. No.)	Description	Adhesive Lubricant	Exclusive Tools
		2. After opening the diaphragm, allow 4mm wide protrusion of the turning ring (A-20) to be engaged with connection lever (B-4) and mount them on the inside tube (D-40).		
		3. Allow the fixed diaphragm (A-17) to fall in position and then secure it by with pan head screw (A-16) with it set to the line scribed at the time of disassembly.		

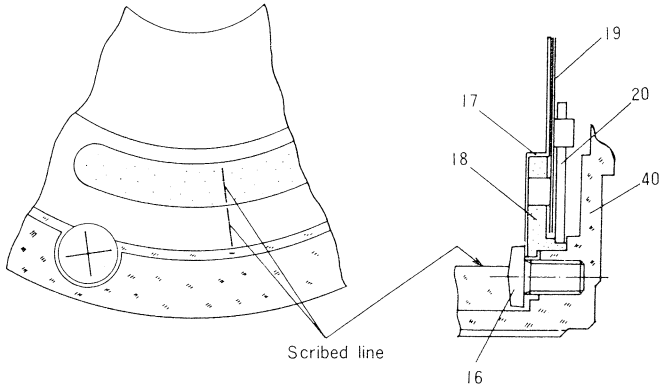

4. The standard aperture of the diaphragm is as below:

Unit: mm

F No.	4	5.6	8	11
Standard aperture	7.5 ~ 9.4	5.3 ~ 6.6	3.7 ~ 4.7	2.6 ~ 3.3

5. To adjust the aperture, turn the blade case.

   Turning it clockwise (as viewed from the front) increases the aperture.

   Turning it counterclockwise (as viewed from the front) decreases the aperture.

6. Auto aperture can be adjusted by moving the connection plate (B-2) to the left and right.

   When viewed from the lens mount side:

ASSEMBLING PROCEDURES

Seq.	Parts, Sub-Ass'y to be assembled (Fig. No.)	Description	Adhesive Lubricant	Exclusive Tools
		Turning the connection plate counter-clockwise increases aperture; turning it clockwise decreases it. Note: Lock the pan head screw (A-16) with adhesive after adjustment.	16-(S640)-17	
6	Focus ring (A-15) Set screw for focus ring (A-14) Focus ring leather (A-13)	1. Fit the focus ring leather (A-13) into the focus ring (A-15). 2. Temporarily secure the focus ring (A-15) using set screws for focus ring (A-14) by moving the scribed line as shown below and in the condition in which the center index line of the depth of field scale ring (A-31) matches with the scribed line. 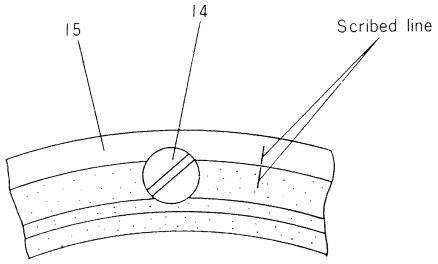 		
7	Regulating washer (A-12) Rear lens sub-assy (A-11) Set ring for rear lens barrel (A-10) Front lens sub-assy (A-6) Pan head screw (A-5)	1. Insert the regulating washer (A-12) and rear lens sub-assy (A-11) into the inside tube (A-40) in the order mentioned and match the scribed line marked on the connection ring (B-5) with the scribed line of the rear lens sub-assy (A-11), and mount and secure the set ring for rear lens barrel (A-10) in position. 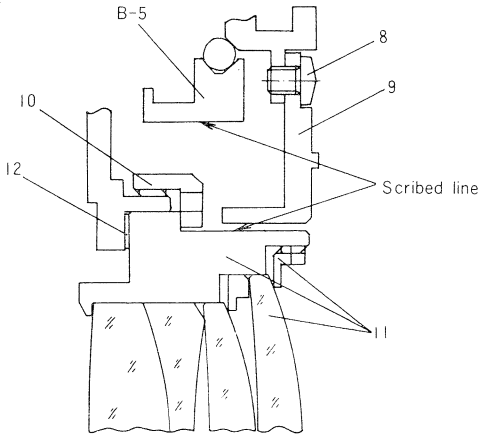 		

ASSEMBLING PROCEDURES

Seq.	Parts, Sub-Ass'y to be assembled (Fig. No.)	Description	Adhesive Lubricant	Exclusive Tools
		2. Assemble the front lens sub-assy (A-6) with the now assembled above unit, making sure that dirt and dust are not introduced in between the front lens sub-assy (A-6) and the rear lens sub-assy (A-11).		
		3. The setting position of the pan head screw (A-5) is as shown in the accompanying figure below.	5-[S640]-6	

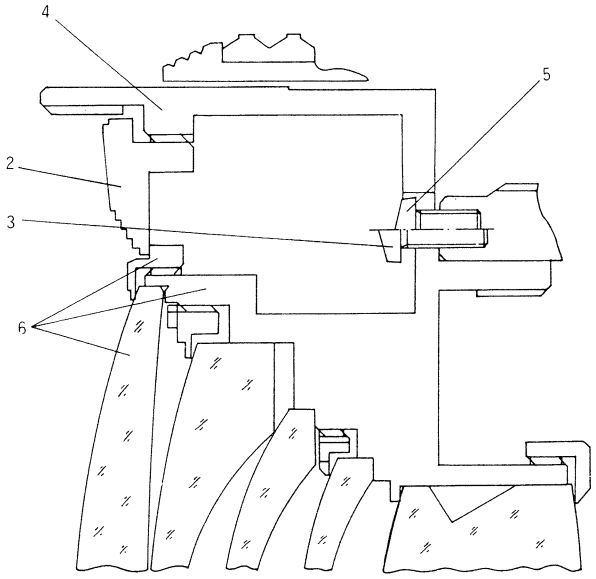

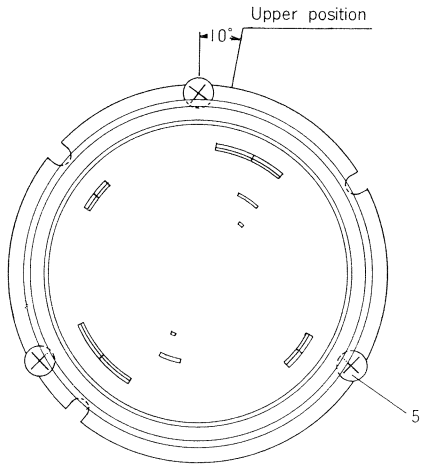

ASSEMBLING PROCEDURES

Seq.	Parts, Sub-Ass'y to be assembled (Fig. No.)	Description	Adhesive Lubricant	Exclusive Tools
8	*ff* adjustment Front tube (A-4) Pan head screw (A-3) Engraved ring (A-2)	Mount the lens unit on the camera body and make *ff* adjustment using a collimator. 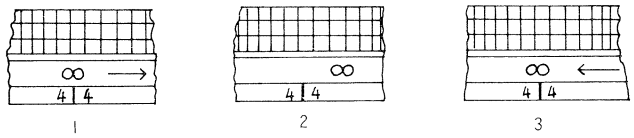 1. Carefully rotate the focus ring (A-15) to nearest distance side to determine focusting position while gradually extending the helicoid. 2. Loosen the set screw for focus ring (A-14) temporarily used to secure the focus ring (A-15) in the position where proper focus is obtained. 3. Turn the focus ring (A-15) under no load, making sure that the helicoid female (A-41) does not rotate and set it firmly now in the position shown above. (The scribed lines will match with each other as shown). 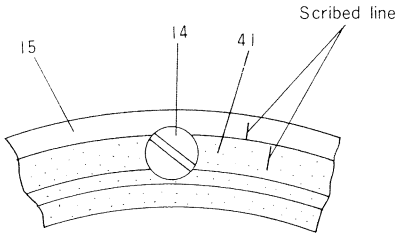 4. Assemble the front tube (A-4), pan head screw (A-5), and engraved ring (A-2) in that order. The engraved ring should be firmly tightened by turning the rubber turning tool.	14-(S640)-41 3-(S640)-4	
9	Covered ring (A-9) Set screw for covered ring (A-8)		8-(S640)-22	

HEXANON AR

f=24mm 1:2.8 (Automatic)

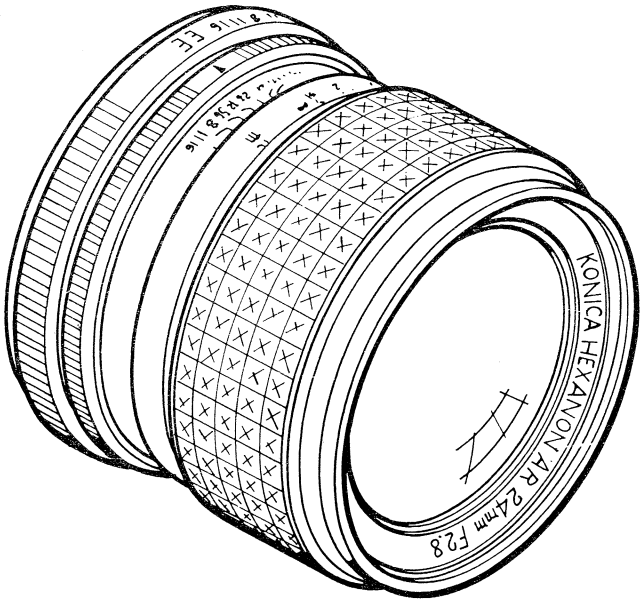

HEXANON AR

MODEL No. 3593

f=24mm 1:2.8 (Automatic)

1	2	3	4	5
Fig. No.	Parts No. or Sub-assembly	部品・部組名称	Parts name or Sub-assembly name	Note
A-1	501	レンズキャップ部組	Lens cap sub-assembly	
	✕07501	レンズキャップ本体	Lens cap	
	✕07502	レンズキャップバネ	Lens cap spring	
	✕07503	ネームプレート	Name plate	
A-2	07951	彫刻リング	Engraved ring	
A-3	701	前群レンズ部組	Front lens sub-assembly	
	✕07901	第1レンズ	No. 1 lens	
	✕07902	第2レンズ	No. 2 lens	
	✕07903	第3レンズ	No. 3 lens	
	✕07904	第4レンズ	No. 4 lens	
	✕07905	第5レンズ	No. 5 lens	
	✕07952	前鏡枠	Front lens barrel	
	✕07953	第1レンズ押え枠	Set ring for No. 1 lens	〔S640〕-07952
	✕07954	第2レンズ押え枠	Set ring for No. 2 lens	
	✕07955	第3レンズ押え枠	Set ring for No. 3 lens	〔S640〕-07952
	✕07961	中鏡枠	Middle lens barrel	
	✕07962	第4レンズ押え枠	Set ring for No. 4 lens	〔S640〕-07961
	✕07963	第5レンズ押え枠	Set ring for No. 5 lens	〔S640〕-07961
A-4	07511	マウントキャップ	Lens mount cap	
A-5	702	後群レンズ部組	Rear lens sub-assembly	
	✕07906	第6レンズ	No. 6 lens	
	✕07907	第7レンズ	No. 7 lens	
	✕07908	第8レンズ	No. 8 lens	
	✕07981	後鏡枠	Rear lens sub-assembly	
	✕07982	第6レンズ押え枠	Set ring for No. 6 lens	〔S640〕-07981
	✕07983	第8レンズ押え枠	Set ring for No. 8 lens	〔S640〕-07981
A-6	07219	フォーカスリング光皮	Leather for focus ring	
A-7	07218	フォーカスカバー	Focus cover ring	〔S640〕-07217
A-8	63405	M1.7φ×2.0 皿小ネジ	1.7φ×2.0 Counter sunk screw	〔S640〕-07201
A-9	07311	前 筒	Front tube	
A-10	07209	フォーカスリング止メネジ	Set screw for focus ring	〔S640〕-07202
A-11	07217	フォーカスリング	Focus ring	〔S640〕-07218
A-12	07404	締付リング	Set ring	
A-13	07151	中 胴	Inside tube	

HEXANON AR

MODEL No. 3593

f=24mm 1:2.8 (Automatic)

1	2	3	4	5
Fig. No.	Parts No. or Sub-assembly	部品・部組名称	Parts name or Sub-assembly name	Note
A-14	07165	羽根ケースセットネジ	Set screw for blade case	〔S640〕-07151
A-15	101	羽根ケース部組	Blade case sub-assembly	
	×07101	羽根ケース	Blade case	
	×07102	駆動リング	Turning ring	
	×07103	駆動ピン A	Turning pin A	
	×07104	駆動ピン B	Turning pin B	
	×07105	リング押え板	Set plat for turning ring	
	×07106	ベルクランク	Bell crank	
	×07107	ベルクランクピン	Bell crank pin	
	×07109	ベルクランク回転軸	Roatation shaft for bell crank	
	×07100	ベルクランクバネ	Bell crank spring	
	×07113	小座金	Washer	
	×07114	羽根押え板	Blade cover	
	×07116	バネ用柱	Spring stud screw	〔S640〕-07101
	61275	1.4φ×1.8 平小ネジ	1.4φ×1.8 Flat screw	〔S640〕-07101
	109	絞り羽根部組	Diaphragm blade sub-assembly	
	×07111	絞り羽根	Diaphragm blade	
	×07112	羽根ダボ	Diaphragm blade dowel	
A-16	07108	ベルクランクローラ	Bell crank roller	Ⓜ-07107
A-17	07159	作動バネ	Main spring	Ⓜ-07153
A-18	07157	リング制限ネジ	Stopper screw for ring	〔S640〕-07151
A-19	07152	中胴基準ピン	Connection set pin for inside tube	〔S640〕-07151
A-20	07156	ボール押え枠 A	Set ring A for ball	〔S640〕-07151
A-21	51169	1.6φ 鋼球	1.6φ Steel ball	
A-22	151	作動リング部組	Working ring for blade sub-assembly	
	×07153	作動リング	Working ring	
	×07161	作動バネ柱	Stud for main spring	〔S640〕-07153
	×07160	接続ネジ	Connection set screw	〔S640〕-07153
	×07162	バネ外れ防止ネジ	Prevention screw	
A-23	61275	1.4φ×1.8 平小ネジ	1.4φ×1.8 Flat screw	〔S640〕-07158
A-24	07158	溝カム	Grooved cam	
A-25	13153	1.2φ×1.8 皿小ネジ	1.2φ×1.8 Counter sunk screw	〔S640〕-07401
A-26	07403	化粧リング	Covered ring	

HEXANON AR

MODEL No. 3593

f=24mm 1:2.8 (Automatic)

1	2	3	4	5
Fig. No.	Parts No. or Sub-assembly	部品・部組名称	Parts name or Sub-assembly name	Note
A-27	63469	1.7φ×4.0 皿小ネジ	1.7φ×4.0 Counter sunk screw	〔S640〕-07203
A-28	401	マウント部組	Lens mount sub-assembly	
	✕07401	マウント	Lens mount	
	✕07402	マウント制限ピン	Lens mount limitation pin	
A-29	07324	EEロックレバー軸	Set screw for EE lock lever	
A-30	07326	EEロックバネ	Spring for EE lock lever	
A-31	323	EEロックレバー部組	EE lock lever sub-assembly	
	✕07323	EEロックレバー	EE lock lever	
	✕07325	EEロックレバーバネ掛け	Spring stud for EE lock lever	
A-32	321	EEロック釦	EE lock button sub-assembly	
	✕07321	EEロック釦	EE lock button	
	✕07322	EEロック連動ピン	Connection pin for screw	
A-33	65434	1.7φ×2.8 薄平小ネジ	1.7φ×2.8 Thin flat screw	〔S640〕-07301
A-34	07308	マニュアルストッパー	Manual stopper	
A-35	07306	クリックバネ押え	Cap for click spring	〔S640〕-07301
A-36	07305	クリックバネ	Click spring	
A-37	51169	1.6φ 鋼球	1.6φ Steel ball	
	202	ヘリコイド部組	Helicoid sub-assembly	
A-(38)	✕07301	絞りリング	Diaphragm ring	Ⓔ-07203
A-(44)	✕07201	ヘリコイド雄	Helicoid male	Ⓖ-07202
A-(45)	✕07202	ヘリコイド雌	Helicoid female	Ⓖ-07201 -07203
A-(50)	✕07203	取付座	Outside tube	Ⓖ-07202 Ⓔ-07301
A-39	63285	1.4φ×2.0 皿小ネジ	1.4φ×2.0 Counter sunk screw	〔S640〕-07203
A-40	07303	クリック板 A	Click plate A	
A-41	07304	クリック板 B	Click plate B	Ⓔ-51169
A-42	07205	直進案内板止メネジ	Set screw for guide plate	〔S640〕-07203
A-43	07204	直進案内板	Guide plate for helicoid	Ⓖ-07201
A-46	07215	ボール押え枠 B	Set ring B for ball	〔S640〕-07203
A-47	51169	1.6φ 鋼球	1.6φ Steel ball	
A-48	07114	リテナー	Retainer	

HEXANON AR

MODEL No. 3593

f=24mm 1:2.8 (Automatic)

1	2	3	4	5
Fig. No.	Parts No. or Sub-assembly	部品・部組名称	Parts name or Sub-assembly name	Note
A-49	203	接続リング部組	Connection ring for diaphragm sub-assembly	
	✕07210	接続リング	Connection ring for diaphragm	
	✕07211	マニュアル制限板止メネジ	Set screw for limitation plate	〔S640〕-07210
	✕07213	マニュアル制限板	Limitation plate	
	07231	本体接続板 A	Connection plate A	To use one according to the diamater of iris. 絞り径の傾向をみて1種使用
	07232	本体接続板 B	Connection plate B	
	07233	本体接続板 C	Connection plate C	
	63285	1.4φ×2.0 皿小ネジ	1.4φ×2.0 Counter sunk screw	〔S640〕-07210

HEXANON AR

A

f=24mm 1 : 2.8 (Automatic)

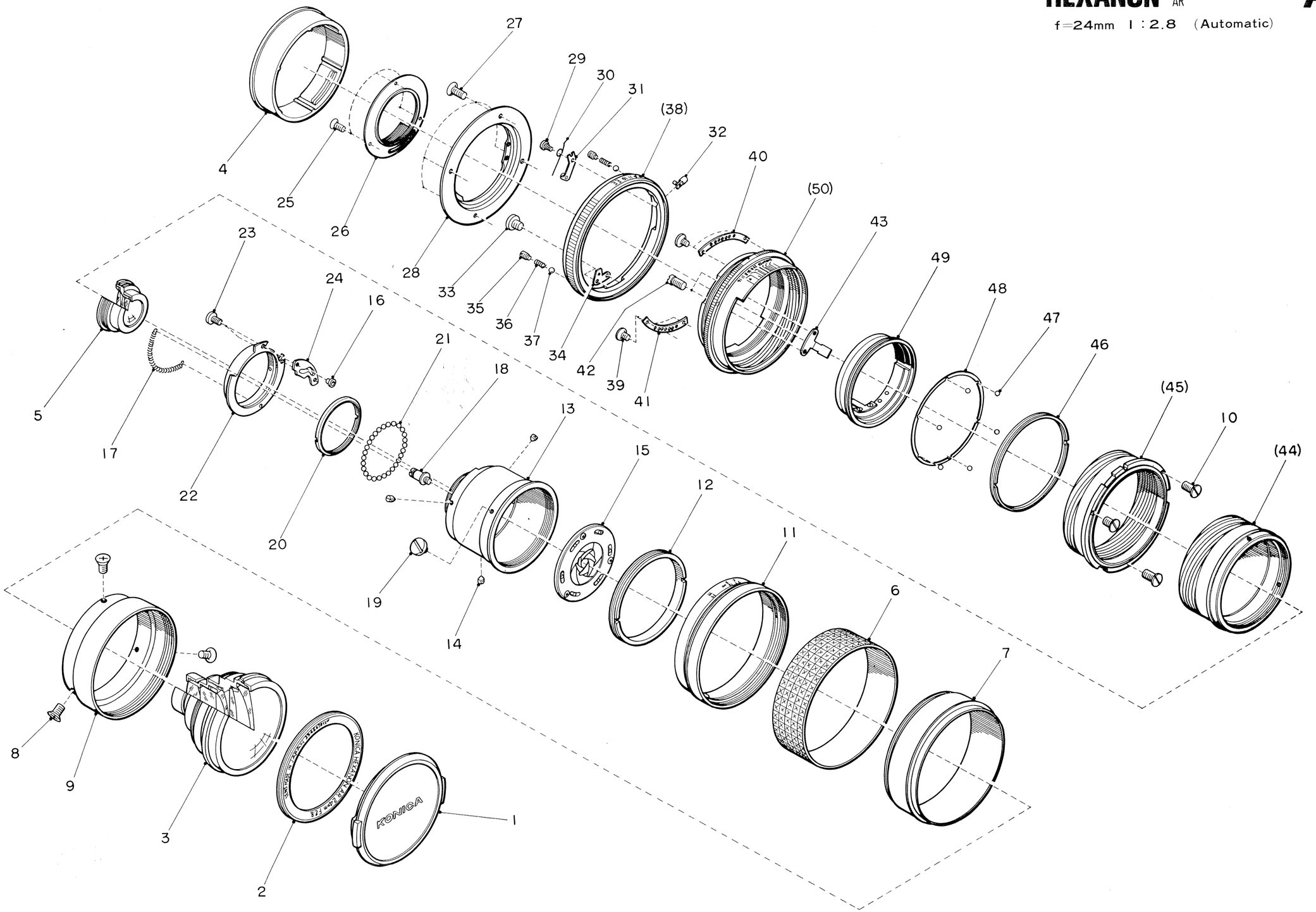

HEXANON AR

MODEL No. 3593

f=24mm 1:2.8 (Automatic)

1	2	3	4	5
Fig. No.	Parts No. or Sub-assembly	部品・部組名称	Parts name or Sub-assembly name	Note
	101	羽根ケース部組	Blade case sub-assembly	
B-1	61275	1.4φ×1.8 平小ネジ	1.4φ×1.8 Flat screw	〔S640〕-07101
B-2	×07114	羽根押え板	Blade cover	
B-3	×07113	小座金	Washer	
B-4	109	絞り羽根部組	Diaphragm blade sub-assembly	
B-5	61275	1.4φ×1.8 平小ネジ	1.4φ×1.8 Flat screw	〔S640〕-07101
B-6	×07116	バネ用柱	Spring stud screw	〔S640〕-07101
B-7	×07105	リング押え板	Set plate for turning ring	
B-8	×07110	ベルクランクバネ	Bell crank spring	
B-9	×07109	ベルクランク回転軸	Rotation shaft for bell crank	
B-10	×07106	ベルクランク	Bell crank	
B-11	×07102	駆動リング	Turning ring	
B-12	×07101	羽根ケース	Blade case	
	151	作動リング部組	Working ring for blade sub-assembly	
B-13	×07161	作動バネ柱	Stud for main spring	〔S640〕-07153
B-14	×07160	接続ネジ	Connection set screw	〔S640〕-07153
B-15	×07162	バネ外れ防止ネジ	Prevention screw	〔S640〕-07153
B-16	×07153	作動リング	Working ring	
	203	接続リング部組	Connection ring for diaphragm sub-assembly	
B-17	×07211	マニュアル制限板止メネジ	Set screw for limitation plate	〔S640〕-07210
B-18	×07213	マニュアル制限板	Limitation plate	
B-19	63285	1.4φ×2.0 皿小ネジ	1.4φ×2.0 Counter sunk screw	〔S640〕07210
B-20	07231	本体接続板 A	Connection plate A	To use one according to the diamater of iris. 絞り径の傾向をみて1種使用
	07232	本体接続板 B	Connection plate B	
	07233	本体接続板 C	Connection plate C	
B-21	×07210	接続リング	Connection ring for diaphragm	

HEXANON AR B

f=24mm 1:2.8 (Automatic)

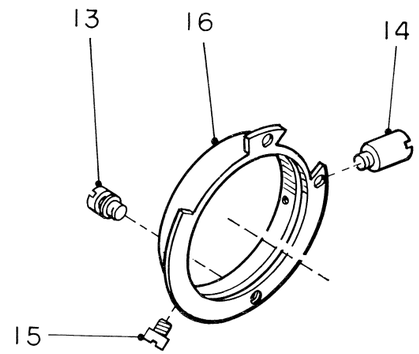

151

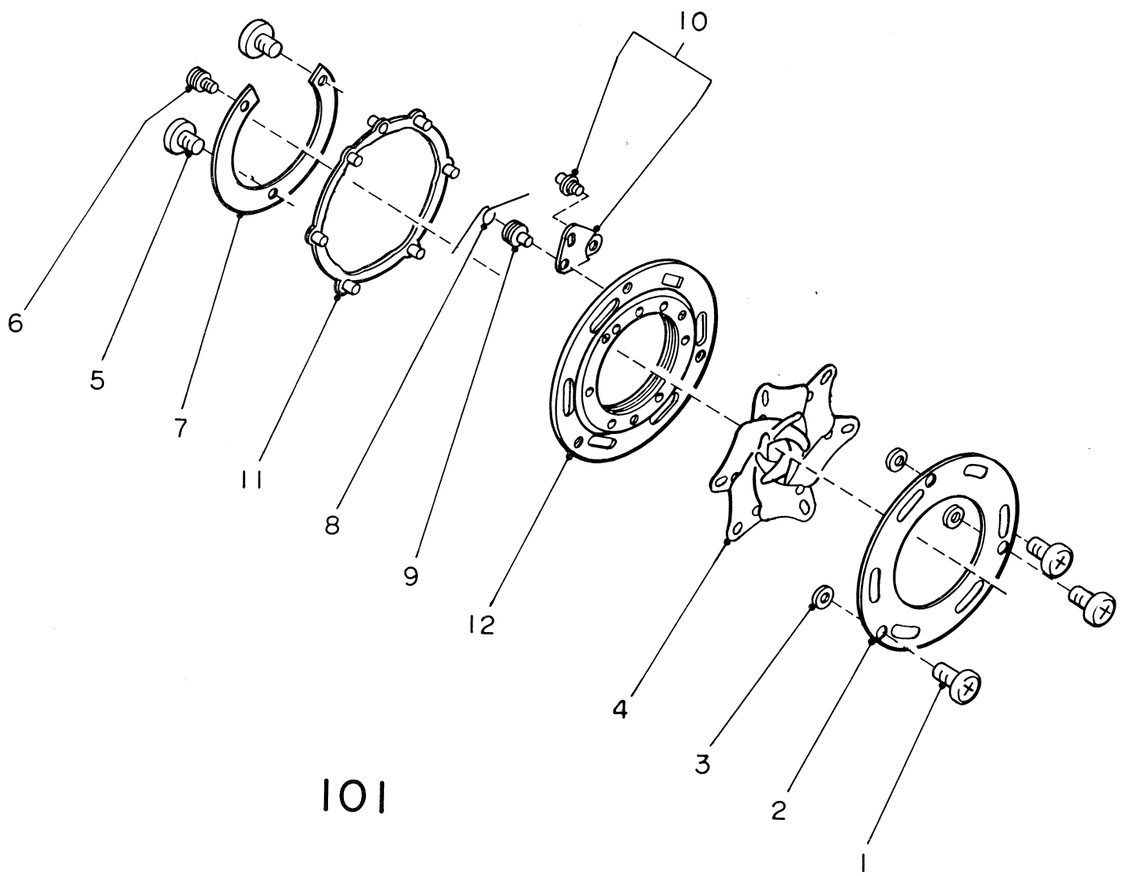

101

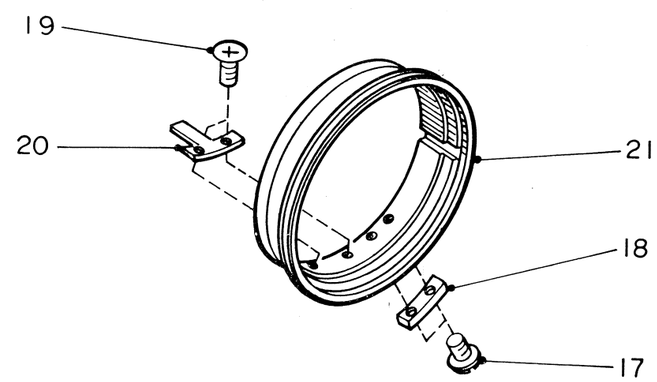

203

UC HEXANON AR

28 mm F1.8 (Automatic)

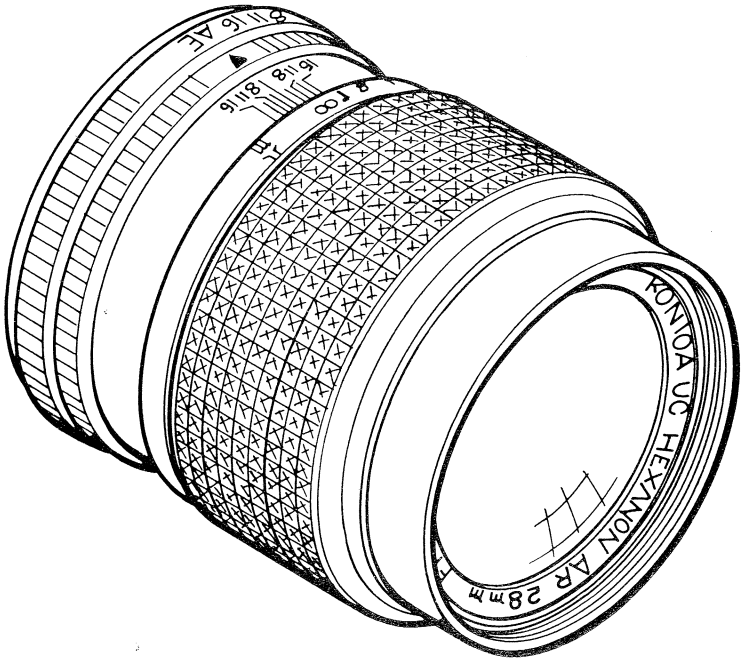

UC HEXANON AR
28 mm F1.8 (Automatic)

MODEL No. 3595

1	2	3	4	5
Fig. No.	Parts No. or Sub-assembly	部品・部組名称	Parts name or Sub-assembly name	Note
A-1	501	レンズキャップ部組	Lens cap sub-assy	
	X 07501	レンズキャップ	Lens cap	
	X 07502	キャップバネ	Lens cap spring	
	X 07503	ネームプレート	Name plate	
A-2	07951	彫刻リング	Engraved ring	
A-3	07219	フォーカス光皮	Leather for focus ring	
A-4	07218	フォーカスカバー	Focus cover	
A-5	16405	1.7φ×2.0 剣先ネジ	1.7φ×2.0 Round head screw	
A-6	07311	前　筒	Front tube	
A-7	701	前群レンズ部組	Front lens sub-assy	
	X 07901	第1レンズ	No.1 lens	
	X 07952	前鏡枠	Front lens barrel	
	X 07953	第1レンズ押えリング	Set ring for No.1 lens	
A-8	705	フロートレンズ部組	Float lens sub-assy	
	X 07902	第2レンズ	No. 2 lens	
	X 07903	第3レンズ	No. 3 lens	
	X 07904	第4レンズ	No. 4 lens	
	X 07961	フロート枠	Float barrel	
	X 07962	第2レンズ押えリング	Set ring for No. 2 lens	
	X 07963	間隔リング	Spacer ring	
	X 07964	第4レンズ押えリング	Set ring for No. 4 lens	
A-9	706	中群レンズ部組	Middle lens sub-assy	
	X 07905	第5レンズ	No. 5 lens	
	X 07971	中鏡枠	Middle lens barrel	
	X 07972	第5レンズ押えリング	Set ring for No. 5 lens	
A-10	07511	マウントキャップ	Lens mount cap	
A-11	13133	1.2φ×1.4 皿小ネジ	1.2φ×1.4 Counter sunk screw	
A-12	07406	化粧板	Covered plate	
A-13	702	後群レンズ部組	Rear lens sub-assy	
	X 07906	第6レンズ	No. 6 lens	
	X 07907	第7レンズ	No. 7 lens	
	X 07908	第8レンズ	No. 8 lens	
	X 07981	後鏡枠	Rear lens barrel	

1	2	3	4	5
Fig. No.	Parts No. or Sub-assembly	部品・部組名称	Parts name or Sub-assembly name	Note
	X 07982	第6レンズ押えリング	Set ring for No. 6 lens	
	X 07983	第8レンズ押えリング	Set ring for No. 8 lens	
A-14	07207	フロート連結ピン	Float connection pin	
A-15	07205	フロート連結リング	Float connection ring	
A-16	61465	1.7φ×4.0ナベ小ネジ	1.7φ×4.0 Pan head screw	
A-17	07206	フロート連結レバー	Float connection lever	
A-18	07209	フォーカスリング止めネジ	Set screw for focus ring	3583-07209
A-19	07217	フォーカスリング	Focus ring	
A-20	07404	締付リング	Set ring	
A-21	07973	中 枠	Inside barrel	
A-22	07151	中 胴	Inside tube	
A-23	07152	中胴基準ピン	Datum pin for inside tube	
A-24	16425	1.7φ×2.5 剣先ネジ	1.7φ×2.5 Round head screw	
A-25	101	羽根ケース部組	Blade case sub-assy	
	61305	1.4φ×2.5 ナベ小ネジ	1.4φ×2.5 Pan head screw	
	X 07114	羽根押え板	Blade cover	
	X 07113	小座金	Washer	
	109	絞り羽根部組	Diaphragm blade sub-assy	
	X 07111	絞り羽根	Diaphragm blade	
	X 07112	羽根ダボ	Diaphragm blade dowell	
	61275	1.4φ×1.8 ナベ小ネジ	1.4φ×1.8 Pan head screw	
	X 07116	バネ用柱	Spring stud screw	
	X 07105	リング押え板	Set plate for turning ring	
	X 07110	ベルクランクバネ	Bell crank spring	
	X 07109	ベルクランク回転軸	Rotation shaft for bell crank	
	X 106	ベルクランク部組	Bell crank sub-assy	
	X 07106	ベルクランク	Bell crank	
	X 07107	ベルクランクピン	Bell crank pin	
	X 102	駆動リング部組	Turning ring sub-assy	
	X 07102	駆動リング	Turning ring	
	X 07103	駆動ピン A	Turning pin A	
	X 07104	駆動ピン B	Turning pin B	
	X 07101	羽根ケース	Blade case	

1	2	3	4	5
Fig. No.	Parts No. or Sub-assembly	部品・部組名称	Parts name or Sub-assembly name	Note
A-26	07162	作動バネ柱 B	Main spring stud B	
A-27	07159	作動バネ	Main spring	3573-07159
A-28	61275	1.4φ×1.8ナベ小ネジ	1.4φ×1.8 Pan head screw	
A-29	07158	溝カム	Grooved cam	
A-30	07108	ベルクランクローラー	Bell crank roller	3573-07108
A-31	07156	ボール押えリングA	Set ring A for ball	
A-32	51169	1.6φ 鋼球	1.6φ Steel ball	
A-33	151	作動リング部組	Working ring sub-assy	
	X 07153	作動リング	Working ring	
	X 07160	作動バネ柱 A	Stud for main spring	
	X 07161	接続ネジ	Connection set screw	
A-34	63459	1.7φ×3.5 皿小ネジ	1.7φ×3.5 Counter sunk screw	
A-35	401	マウント部組	Lens mount sub-assy	
	X 07401	マウント	Lens mount	3573-07401
	X 07402	マウント制限ピン	Lens mount limitation pin	3573-07402
A-36	07334	マニュアルストッパー止めネジ	Set screw for manual stopper	
A-37	07335	マニュアルストッパーバネ	Spring for manual stopper	
A-38	331	マニュアルストッパー部組	Manual stopper sub-assy	
	X 07331	マニュアルストッパー	Manual stopper	3573-07331
	X 07333	マニュアルストッパーバネ掛け	Spring stud for manual stopper	3573-07333
A-39	11240	1.4φ×1.2 平小ネジ	1.4φ×1.2 Flat screw	
A-40	07332	絞り調整板	Regulation plate for diaphragm	3573-07332
A-41	07336	絞りリングストッパー	Diaphragm ring stopper	
A-42	07324	AEロックレバー軸	Set screw for AE lock lever	3576-07324
A-43	07326	AEロックバネ	Spring for AE lock lever	3573-07326
A-44	323	AEロックレバー部組	AE lock lever sub-assy	
	X 07323	AEロックレバー	AE lock lever sub-assy	3573-07323
	X 07325	AEロックバネ掛け	Spring tude for AE lock lever	3576-07325

UC HEXANON AR
28 mm F1.8 (Automatic)

MODEL No.3595

1	2	3	4	5
Fig. No.	Parts No. or Sub-assembly	部品・部組名称	Parts name or Sub-assembly name	Note
A-45	321	AEロック釦部組	AE lock button sub-assy	
	X 07321	AEロック釦	AE lock button	3583-07321
	X 07322	AEロック連動ピン	Connection pin for AE lock	3583-07322
A-46	07306	クリックバネ押え	Set screw for click spring	3573-07306
A-47	07305	クリックバネ	Click spring	3573-07305
A-48	51169	1.6φ 鋼球	1.6φ Steel ball	
A-50	63285	1.4φ×2.0 皿小ネジ	1.4φ×2.0 Counter sunk screw	
A-51	07303	クリック板 B	Click plate B	
A-52	07304	クリック板 A	Click plate A	
A-53	65445	1.7φ×3.0ナベ小ネジ	1.7φ×3.0 Pan head screw	
A-54	07204	直進案内板	Guide plate for helicoid	
	202	ヘリコイド部組	Helicoid sub-assy	
A-(49)	X 07301	絞りリング	Diaphragm ring	
A-(56)	X 07201	ヘリコイド 雄	Helicoid male	
A-(55)	X 07202	ヘリコイド 雌	Helicoid female	
A-(57)	X 07203	取付座	Outside tube	
A-58	07215	ボール押えリングB	Set ring B for ball	
A-59	51169	1.6φ 鋼球	1.6φ Steel ball	
A-60	203	接続リング部組	Connection ring for diaphragm sub-assy	
	X 07210	絞り接続リング	Connection ring for diaphragm	
	X 07212	マニュアル制限板	Limitation plate	3573-07212
	07231	本体接続板 A	Connection plate A	3573-07231
	07232	本体接続板 B	Connection plate B	
	07233	本体接続板 C	Connection plate C	
	63285	1.4φ×2.0 皿小ネジ	1.4φ×2.0 Counter sunk screw	
	61275	1.4φ×1.8 ナベ小ネジ	1.4φ×1.8 Pan head screw	

UC HEXANON AR 28 mm F1.8 (Automatic)

A

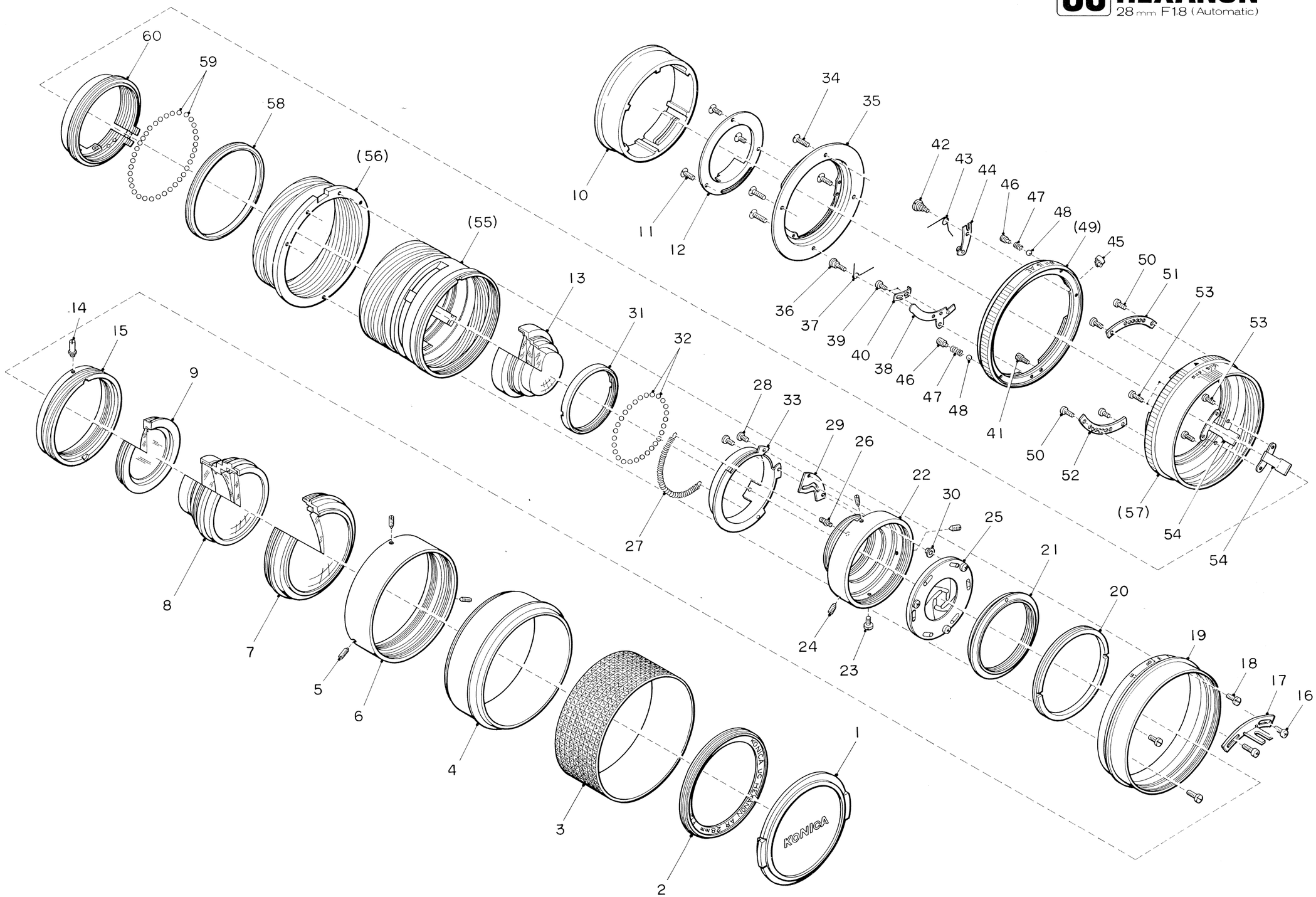

1	2	3	4	5
Fig. No.	Parts No. or Sub-assembly	部品・部組名称	Parts name or Sub-assembly name	Note
	101	羽根ケース部組	Blade case sub-assy	
B-1	61305	1.4φ×2.5 ナベ小ネジ	1.4φ×2.5 Pan head screw	
B-2	X 07114	羽根押え板	Blade cover	
B-3	X 07113	小座金	Washer	
B-4	109	絞り羽根部組	Diaphragm blade sub-assy	
	X 07111	絞り羽根	Diaphragm blade	
	X 07112	羽根ダボ	Diaphragm blade dowell	
B-5	61275	1.4φ×1.8 ナベ小ネジ	1.4φ×1.8 Pan head screw	
B-6	X 07116	バネ用柱	Spring stud screw	
B-7	X 07105	リング押え板	Set plate for turning ring	
B-8	X 07110	ベルクランクバネ	Bell crank spring	
B-9	X 102	駆動リング部組	Turning ring sub-assy	
	X 07102	駆動リング	Turning ring	
	X 07103	駆動ピン A	Turning pin A	
	X 07104	駆動ピン B	Turning pin B	
B-10	X 07109	ベルクランク回転軸	Rotation shaft for bell crank	
B-11	X 106	ベルクランク部組	Bell crank sub-assy	
	X 07106	ベルクランク	Bell crank	
	X 07107	ベルクランクピン	Bell crank pin	
B-12	X 07101	羽根ケース	Blade case.	
	151	作動リング部組	Working ring for blade sub-assy	
B-13	X 07160	作動バネ柱 A	Stud for main spring A	
B-14	X 07161	接続ネジ	Connection set screw	
B-15	X 07153	作動リング	Working ring	
	203	接続リング部組	Connection ring for diaphragm sub-assy	
B-16	63285	1.4φ×2.0 皿小ネジ	1.4φ×2.0 Counter sunk screw	
B-17	07231	本体接続板 A	Connection plate A	
	07232	本体接続板 B	Connection plate B	
	07233	本体接続板 C	Connection plate C	
B-18	61275	1.4φ×1.8 ナベ小ネジ	1.4φ×1.8 Pan head screw	
B-19	X 07212	マニュアル制限板	Limitation plate	
B-20	X 07210	絞り接続リング	Connection ring for diaphragm	

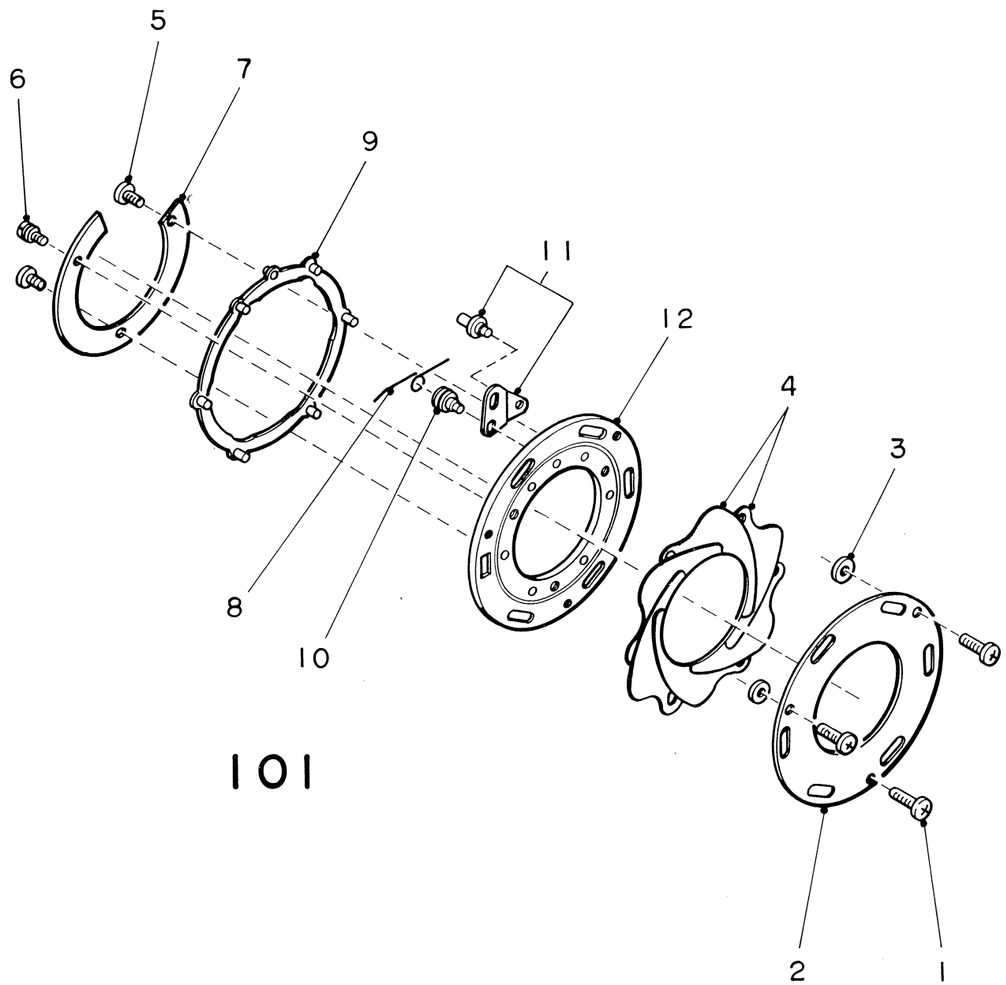

101

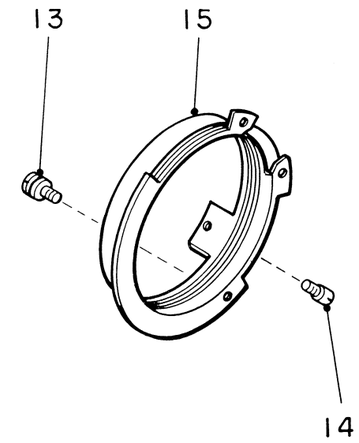

151

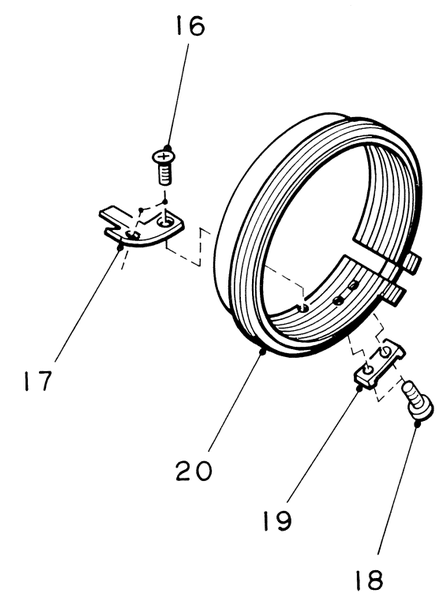

203

UC HEXANON AR 28mm F1.8 DISASSEMBLING PROCEDURES

Seq.	Parts, Sub-Ass'y to be disassembled (Fig. No.)	Description	Solvent	Exclusive Tools
1	Engraved ring (A-2)	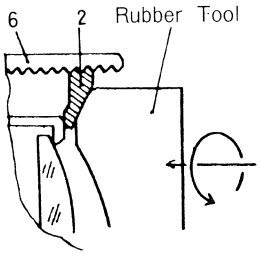 As engraved ring(A-2) is screwed into filter screw of front tube (A-6), remove rubber tool by turning and pressing it.		
2	Leather (focus ring) (A-3) Focus cover (A-4) Round head screw (A-5) Front tube (A-6)	1. Using driver tip etc. lift a part of leather to hold it and pull strongly. 2. Lubrication of toluole at border line between focus cover (A-4) and focus ring (A-19) facilifates easy removal of focus cover. 3. Remove round head screw (A-5). Front tube (A-6) is left screwed in helicoid female (A-55).	T ↓ 4-(S640)-19 T ↓ 5-(S640)-6	
3	Front lens sub-assy. (A-7)	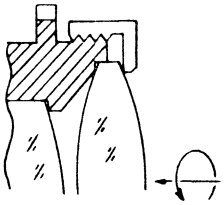 Rotate front lens sub-assy. to the left to disassemble.		
4	Float lens sub-assy. (A-8) Middle lens sub-assy. (A-9)	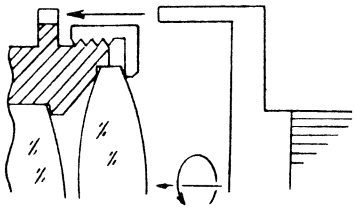 1. Mate universal driver with notch of float lens sub-assy. (A-8) and rotate and detach it. 2. Mate universal screw-driver with notch of middle lens sub-assy. (A-9) and rotate to detach.		

Seq.	Parts, Sub-Ass'y to be disassembled (Fig. No.)	Description	Solvent	Exclusive Tools
5	Counter sunk screw (A-11) Covered plate (A-12)	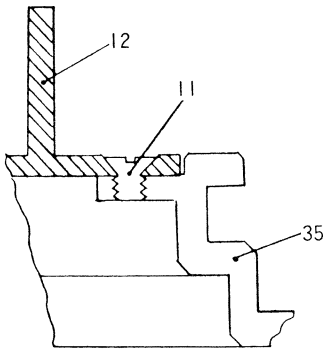 Covered ring (A-12) is often glued with Sundyne 640; then pull it strongly.	T ↓ 12-(S640)-35	
6	Rear lens sub-assy. (A-13)	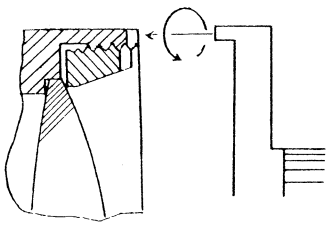 Engage and rotate universal driver with outer solt. Inner solt works as set ring for No.8 lens.		
7	Float connecting pin (A-14) Float connecting ring (A-15)	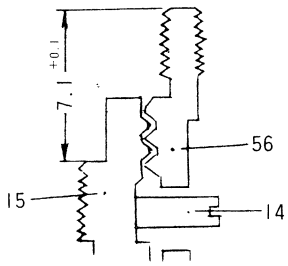 1. Remove float connecting pin (A-14). 2. Confirm the screw start point shown in the figure and deploy float connecting ring (A-15)(at ∞ position). Make sure that dirt and dust do not gather on the float connecting ring while storing. Refer to the accompanying figure of Steps 5 and 6.		
8	Pan head screw (A-16) Float connecting lever (A-15)	Before removing the pan head screw (A-16), mark attaching position of float connecting lever (A-17) on the edge surface of helicoid male.	T ↓ 16-(S640)-17	

Seq.	Parts, Sub-Ass'y to be disassembled (Fig. No.)	Description	Solvent	Exclusive Tools
9	Set screw for focus ring (A-18) Focus ring (A-19)	1. Set screw for focus ring (A-18) is glued with Sundyne 640, but do not use solvent toluole to avoid its ingress into helicoid screw. 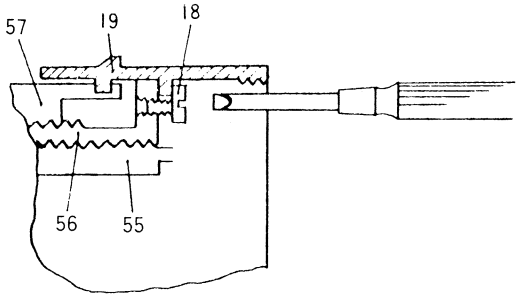 2. After removal of (A-18), mate the projection of (A-19) with notch of (A-55), while looking it from front side and draw it out (A-19). 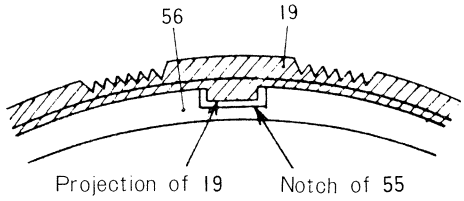 	T ↓ 18-(S640)-19	
10	Fastening ring (A-20) Middle frame (A-21) Inside tube (A-22)	1. Set diaphragm at 16. 2. Bring the helicoid in the most advanced (∞) position. 3. Detach middle frame (A-21). 4. Remove fastening ring (A-20). It is advisable to let Toluole flow a little to ease for easy removal from Sundyne. 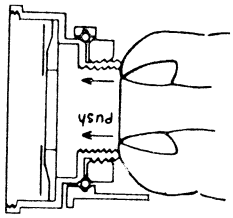 5. Draw inside tube (A-22) forwardly. Or push it from the rear mount side, using both thumbs.	T ↓ 20-(S640)-55	

Seq.	Parts, Sub-Ass'y to be disassembled (Fig. No.)	Description	Solvent	Exclusive Tools
11	Inside tube reference pin (A-23) Round head screw (A-24) Blade case sub-assy. (A-25) Bell crank roller (A-30)	1. Before disassembling ... marking line the blade case (A-25) and inside tube (A-22) of relative position for easy assembly. 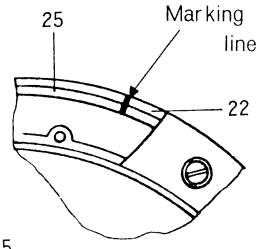 2. Upon removal of blade case sub-assy. (A-25), bell crank roller (A-30) may fall. So take care not to lose (A-30). 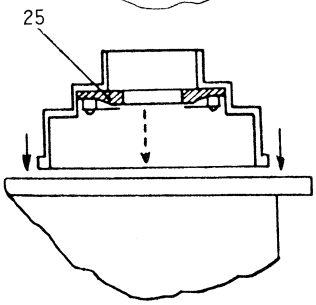 3. Hold inside tube (A-21) by hand and give a shock as shown by arrows to detach (A-25). Avoid exerting over-shocking or holding the diaphragm ring sub-assy. (A-33) may sustain a flaw on the sliding area in part between steel balls (A-32), resulting in irregular operation of (A-33). 4. Detach inside tube reference pin (A-23).	T ↓ 24-(S640)-22 T ↓ 23-(S640)-22	
12	Pan head screw (A-28) Grooved cam (A-29)	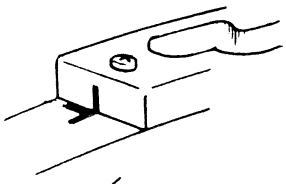 1. Marking line the grooved cam (A-29) and diaphragm ring (A-33) of relative position for easier assembly. 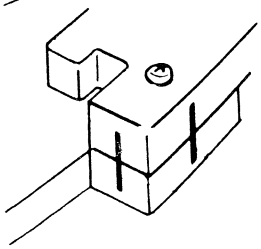 2. Do not push it too strong down while loosening pan head screw (A-28).	T ↓ 28-(S640)-29	
13	Stud for main spring(A-26) Main spring (A-27)			

Seq.	Parts, Sub-Ass'y to be disassembled (Fig. No.)	Description	Solvent	Exclusive Tools
14	Stud ring for ball (A-31) Steel ball (A-32) Main ring sub-assy. (A-33)	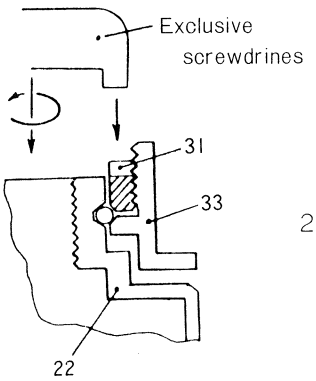 1. Take care not to let toluole contact steel ball (A-32). If it has come into contact, change (A-32) to avoid rust formation. 2. When taking out the main ring sub-assy. (A-33), use suitable casing to avoid scattering of the steel ball.	T ↓ 31-(S640)-33	
15	Counter sunk screw (A-34) Mount sub-assy. (A-35)	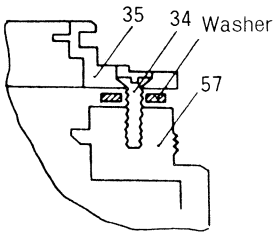 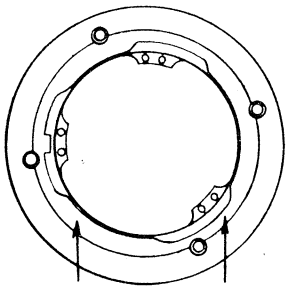 1. Record where washers were located, if any, between mount (A-35) and outside tube (A-57). ※ Washers are used to adjust tilt of optical axis. 2. When (A-35) is not removable due to tight glue, lift it in a direction of arrows shown at left to facilitate easy detachment.	T ↓ 34-(S640)-57	
16	Set screw for manual stopper (A-36) Spring for manual stopper (A-37) Manual stopper sub-assy. (A-38) Flat screw (A-39) Regulating plate for diaphragm (A-40)	1. Take care not to scatter manual stopper spring (A-37) after removing the set screw for manual stopper (A-36). 2. Before detaching of flat screw (A-39), marking line the regulating plate for diaphragm (A-40) and (A-38) of their relative positions.	T ↓ 39-(S640)-40	

Seq.	Parts, Sub-Ass'y to be disassembled (Fig. No.)	Description	Solvent	Exclusive Tools
17	Diaphragm ring stopper (A-41) Set screw for AE lock lever (A-42) AE lock spring (A-43) AE lock lever sub-assy. (A-44) AE lock button sub-assy.(A-45)	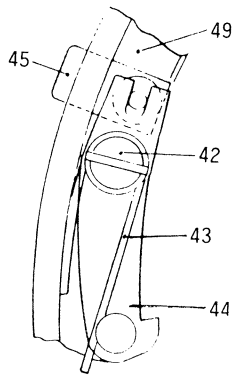 Immediately after detaching set screw for AE lock lever (A-42) from diaphragm ring (A-49), (A-43) and (A-44) may jump out due to AE lock spring (A-43), cause lose of them.	T ↓ 41-(S640)-49	
18	Cap for click spring (A-46) Click spring (A-47) Steel ball (A-48) Diaphragm ring (A-49)	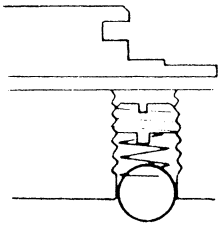 Upon removal of cap for click spring (A-46), do not forthwith remove click spring (A-47) and steel ball (A-48). After removing of diaphragm ring (A-49), push steel ball by driver tip for easy removal. (Mount side is kept down.)	T ↓ 50-(S640)-57	
19	Counter sunk screw(A-50) Click plate B (A-51) Click plate A (A-52)	Do not remove this except for changing click plate. 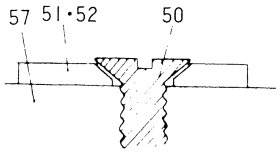 Click plates A, B (A-51, A-52) are interchangeable with each other in respective positions except in case the same kind of plates is employed. Therefore no position confirmation is necessary.	T ↓ 50-(S640)-57	

Seq.	Parts, Sub-Ass'y to be disassembled (Fig. No.)	Description	Solvent	Exclusive Tools
20	Confirmation of dimensions of reference point	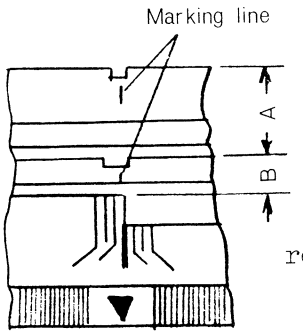 Measure and record the dimensions of reference points (A and B) of engaged helicoid (at ∞ position). Where designed. reference dimensions are A = 21 ± 0.2 B = 4.5 ± 0.2	[T] ↓ 50-(S640)-57	
21	Pan head screw (A-53) Guide plate for helicoid (A-54)	By slight extension of helicoid, guide plate for helicoid becomes easily removable.	[T] ↓ 53-(S640)-57	
22	Helicoid male (A-55) Helicoid female(A-56) Outside tube (A-57)	1. Confirm position of screw engagement as soon as helicoid male (A-55) has been removed, helicoid female (A-56) and outside tube (A-57) by using notches of each part, holes etc. (Marking line the (A-56) displacement from helicoid female as a center for the reference of assembling work.) 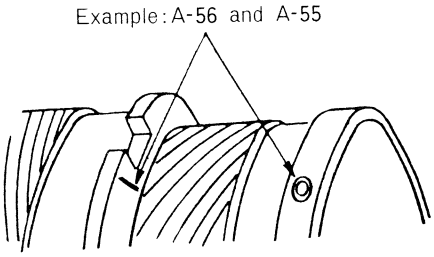 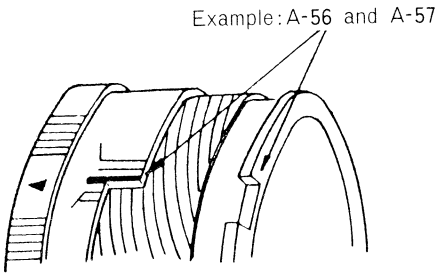 2. Avoid leaving foreign object on helicoid screw during handling and storage. ※ Above figures are specifically for F1.4, therefore they are a little different from 28 mm F1.8 in shape.		

Seq.	Parts, Sub-Ass'y to be disassembled (Fig. No.)	Description	Solvent	Exclusive Tools
23	Set ring B for ball (A-58) Steel ball (A-59) Connection ring for diaphragm sub-assy. (A-60)	1. Use toluole on set ring B for ball (A-58) for easier work, but take care not to stain steel ball (A-59) with it. 2. It is advisable to carry out work in a suitable case to avoid scattering of steel balls.	[T] ↓ 58-(S640)-57	

Seq.	Parts, Sub-Ass'y to be assembled (Fig. No.)	Description	Adhesive Lubricant	Exclusive Tools
1	Outside tube (A-57) Connecting ring sub-assy. (A-60) Steel ball (A-59) Set ring B for balls (A-58)	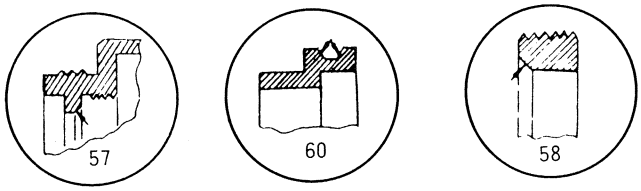 1. Confirm that no flaw exists at arrowed positions above. If any flaw is found, change with new part. 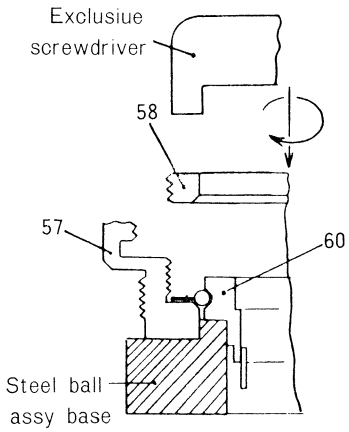 2. Put connecting ring sub-assy. (A-60) on steel ball base and set outside tube on steel ball assy. base. Insert steel ball and screw in set ring B for balls (A-58) gradually. 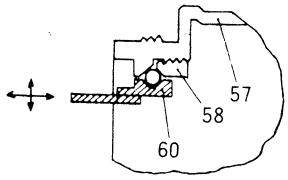 3. Backlash in A-60. When tightening (A-58), backlash in A-60 is not more than 0.1 in all arrowed directions and smooth movement is provided. Excessive tightening may cause flaws at arrowed point mentioned in step 1 resulting in unsmooth movement. 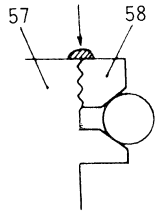 4. Coating of glue. Take care not to coat it (A-59) shown in the figure at left. 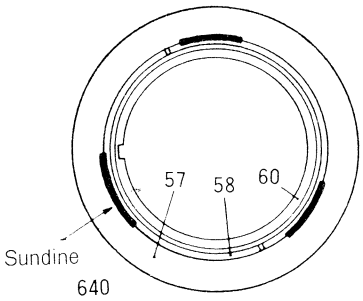 5. Arrowed position in step 1, adjacent to(A-59) must not be coated oily matter.	58-[S640]-57	

Seq.	Parts, Sub-Ass'y to be assembled (Fig. No.)	Description	Adhesive Lubricant	Exclusive Tools
2	Helicoid male (A-55) Helicoid female (A-56) Outside tube (A-57)	1. Assemble just in the same position as when disassembled. 2. Compare with the reference dimensions recorded before disassembly. Use extreme care as improper screw engagement may cause imperfect ƒƒ adjustment on succeeding process. 3. Confirm smoothness of helicoid movement.	55-Ⓖ-56 -Ⓖ-57	
3	Pan head screw (A-53) Guide plate for helicoid (A-54)	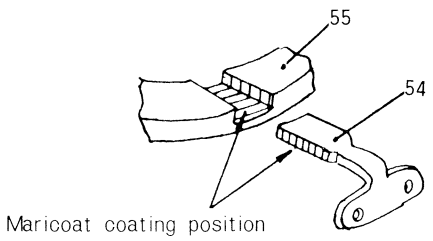 1. Backlash between slot of helicoid and guide plate for helicoid must be kept to a minimum to provide smooth operation of helicoid. 2. Confirm smooth operation of helicoid after assembly. At that time, make sure that (A-54) does not come out of the groove of (A-55). 3. Remove excessive oil coming out from screw part after confirmation of helicoid operation.	54-Ⓖ-55 53-〔S640〕-57	
4	Pan head screw (A-50) Click plate B (A-51) Click plate A (A-52)	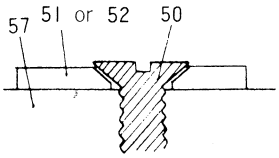 Pan head screw (A-50) shall not protrude from the surface of click plates (A-51, 52).	50-〔S640〕-57 51-Ⓔ 52-Ⓔ	

Seq.	Parts, Sub-Ass'y to be assembled (Fig. No.)	Description	Adhesive Lubricant	Exclusive Tools
5	Diaphragm ring (A-49) Diaphragm ring stopper (A-41)	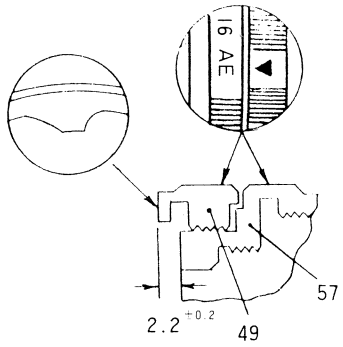 Engage screws until diaphragm ring (A-49) makes contact with the outside tube (A-57) and then allow it to return to the position above shown (where mark mates AE). Dimensions shown above must be secured.	49-Ⓖ-57	
6	Set screw for manual stopper (A-36) Spring for manual stopper (A-37) Manual stopper sub-assy. (A-38) Flat screw (A-39) Regulating plate for diaphragm (A-40)	When (A-40) is moved; to left ····· it becomes larger to right ····· it becomes smaller as a whole. After adjustment, set (A-39) shall with Sundyne 640. 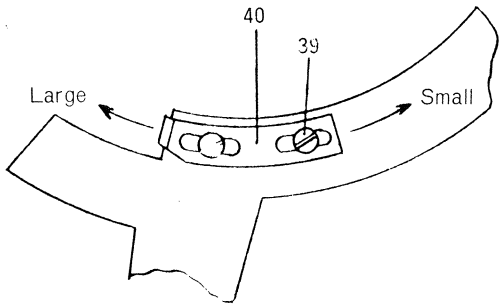	36-[S640]-49	
7	Set screw for AE lock lever (A-42) AE lock spring (A-43) AE lock lever sub-assy.(A-44) AE lock button sub-assy. (A-45)	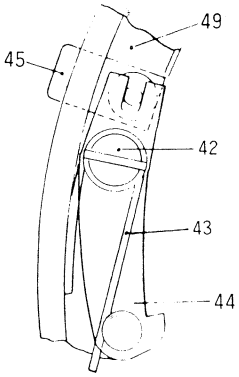 1. Do not use any lubricant oil at holes of diaphragm ring (A-49) engaging with AE lock button sub-assy. (A-45) and at parts assembled to avoid oil overflow. 2. AE lock rattling is regulated by restriking of AE lock lever sub-assy. claws.		

Seq.	Parts, Sub-Ass'y to be assembled (Fig. No.)	Description	Adhesive Lubricant	Exclusive Tools
8	Steel ball (A-48) Click spring (A-47) Cap for click spring (A-46)	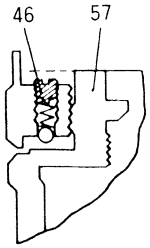 1. Click strength is adjusted by screwing interference of cap for click spring (A-46). 2. Do not permit head of (A-46) to protroude beyond outside tube (A-57).	46-(S640)-49	
9	Mount (A-35) Counter sunk screw (A-34)	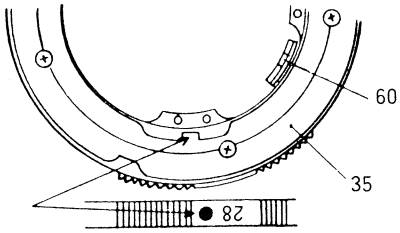 Turn connecting ring sub-assy. (A-60) counter-clockwise until it comes into compact. The adjacent part; then allow it stop and assemble as shown.	34-(S640)-57	
Assembled parts above are held for a while and make assembly of the outside tube. It is advisable to keep the mount cap on for protection.				

Seq.	Parts, Sub-Ass'y to be assembled (Fig. No.)	Description	Adhesive Lubricant	Exclusive Tools
10	Inside tube (A-22) Main ring sub-assy. (A-33) Steel ball (A-32) Set frame A for ball (A-31)	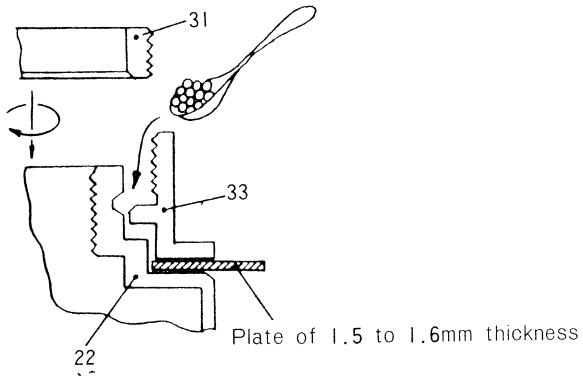 The foregoing drawing is for 35 mm F2.8 and hence it differs from this type somewhat in shape. Insert 1.5 to 1.6 mm thick plate between the inside tube (A-22) and main ring sub-assy. (A-33), charge steel balls (A-32) into whole periphery as shown in the figure and then gradually screw in set frame A for ball (A-31). (A-32) shall have tolerance of approx. two balls over the entire periphery. Tolerance shall be kept to a minimum to ensure minimum smooth operation.	22-〔S640〕-31	
11	Inside tube reference pin (A-23) Stud B for main spring (A-26) Main spring (A-27)	Coat whole contact area of main spring (A-27) of main ring sub-assy. (A-33) with Molycoat.	23-〔S640〕-22 27-Ⓜ-22	
12	Blade case sub-assy. (A-25) Round head screw (A-24)	1. Assemble making with marking off. 2. Set temporarily pan head screw (A-24). 3. If change of blade case sub-assy. is necessary, counter-attaching should be made.	24-〔S640〕-22	

Seq.	Parts, Sub-Ass'y to be assembled (Fig. No.)	Description	Adhesive Lubricant	Exclusive Tools
13	Bell crank roller (A-30) Grooved cam (A-29) Pan head screw (A-28)	1. Attach bell crank roller (A-30). 2. Attach the grooved cam. 3. When checking the opening of diaphragm, driver, etc. having such diameter as shown below is used.	30-Ⓜ-29	

Unit: mm

F. NO	1.8	2.8	4	5.6	8	11	16
Reference diameter	22.8 ~ 20.7	15.1 ~ 12.0	10.6 ~ 8.4	7.4 ~ 5.9	5.2 ~ 4.1	3.7 ~ 2.9	2.6 ~ 2.1

4. Method of regulating the diameter of diaphragm.

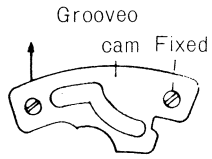

Open diaphragm side becomes larger (smaller if reverse of the arrow direction).

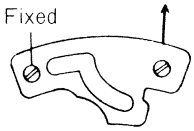

Minimum diaphragm side becomes larger (smaller if reverse of the arrow direction).

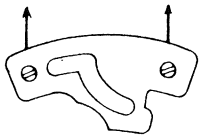

Full from min. opening becomes larger (smaller if reverse of the arrow direction).

When cam shift is not made sufficiently for regulation, turn the entire blade case to the left or right. — 22-(S640)-24

5. After diaphragm dia. regulation, tighten strongly three set screws for blade case. Be careful as excessive tightening may cause deformation of inside tube (A-22) which makes insertion of the tube into helicoid female (A-55) difficult. One of screws should be counter-attached.

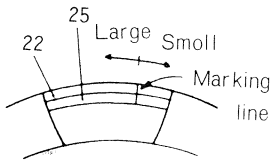

6. Tighten pan head screw (A-28). — 28-(S640)-29

Seq.	Parts, Sub-Ass'y to be assembled (Fig. No.)	Description	Adhesive Lubricant	Exclusive Tools
14	Helicoid male (A-56) Inside tube (A-22) Rear lens sub-assy. (A-13) Middle frame (A-21) Clamp ring (A-20)	1. Insert rear lens sub-assy. (A-13) to the inside tube (A-22). 2. Insert middle frame (A-21) to the inside tube (A-22). 3. Mate diaphragm dial with F16 and with reference point dimension established, engage inside tube (A-22) and clamp with clamp screw (A-20) from the front side. Also confirm if connecting screw attached to outer periphery side of main ring sub-assy. (A-33) engages with the solt of inner periphery side of connecting ring sub-assy. (A-60). 4. Check diaphragm diameter. If not correct, adjust according to step 6 (manual diaphragm adjust) and step 14 (automatic diaphragm adjust).	20-(S640)-22	
15	Set screw for focus ring (A-18) Focus ring (A-19)	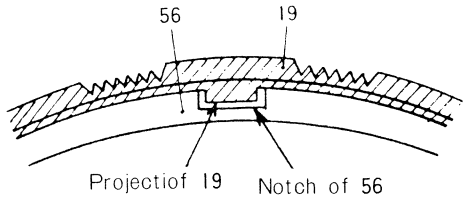 1. Insert focus ring (A-19), making its projection with notch of helicoid female (A-56). 2. Rotate only Helicoid male (A-56) to position helicoid in most advanced state. Temporarily secure it by set screw for focus lens (A-18).	18-(S640)-19	
16	Helicoid male (A-56) Float connecting ring (A-15) Float connecting pin (A-14)	1. Adjust screw reference point of float connecting ring in accordance the figure at the left. 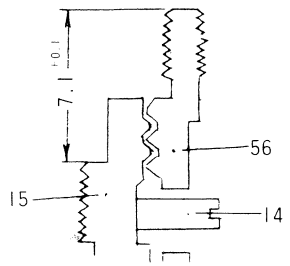 2. Screw in float connecting pin.		

Seq.	Parts, Sub-Ass'y to be assembled (Fig. No.)	Description	Adhesive Lubricant	Exclusive Tools
17	Pan head screw (A-16) Float connecting lever (A-17)	Set float connecting lever (A-17) with pan head screw (A-16), keeping reference point dimensions of step 17.	16-[S640]-17	
18	Middle lens sub-assy. (A-9) Float lens sub-assy. (A-8) Front lens sub-assy. (A-7)	Clean inside of body tube while moving the diaphragm blade assembly.		
19	ƒƒ regulation	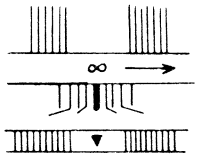 1. Turn focus ring to very near distance side and by advancing helicoid gradually to determine focus position. 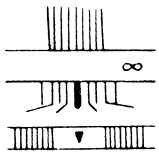 2. Upon obtaining focus position, loosen set screw (18) from the focus ring which has been temporarily previously. 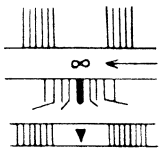 3. Turn focus ring, taking care not to let helicoid female rotate. Tighten three set screws (18) for focus ring equally.	18-[S640]-19	
20	Round head screw (A-5) Front tube (A-6)		5-[S640]-6	
21	Focus cover (A-4) Leather (A-3)		4-[S640]-19	

Seq.	Parts, Sub-Ass'y to be assembled (Fig. No.)	Description	Adhesive Lubricant	Exclusive Tools
22	Covered plate (A-12) Counter sunk screw (A-11)	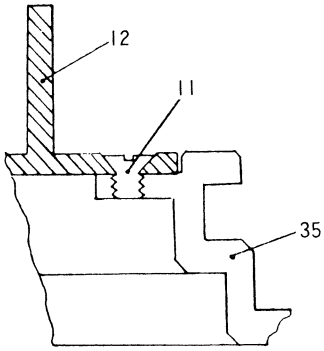 Make sure that the covered plate (A-12) and counter sunk screw (A-11) do not protrude beyond the rearmost surface of mount (A-35).		
23	Engraved ring (A-2)			

Seq.	Parts, Sub-Ass'y to be disassembled (Fig. No.)	Description	Solvent	Exclusive Tools
1	Round head screw (A-2) Front tube sub-assy. (A-3) Hood sub-assy. (A-4)	Front tube sub-assy. is screwed in zoom helicoid sub-assy. (A-17). After removing round head screw (A-2), turn it by grasping it with rubber plate for easy removal. Draw out hood sub-assy. (A-4) forwardly.	T ↓ 2-(S640)-3	
2	FC lens sub-assy. (A-5)	FC lens sub-assy. (A-5) is screwed in zoom helicoid sub-assy. (A-17). Make zoom ring in a state of f=100 mm, hold zoom helicoid and remove it by universal wrench.		
3	Reflection prevention frame (A-6) V_1 lens sub-assy. (A-7) Regulating washer (A-8) V_2 lens sub-assy. (A-9)	All 4 parts on the left are screwed on zoom sub-assy. (A-42). Removal is made by universal wrench, however for easy removal and less affection to zoom function, keep V_1 lens sub-assy. (A-7) in a state of zoom ring (A-19) of f=45 mm and V_2 lens sub-assy. (A-9) f=100 mm. Confirm number and thickness of regulating washers.		
4	Counter sunk screw (A-11) Covered ring (A-12) Master lens sub-assy. (A-13)	Covered ring (A-12) is sometimes glued at mount sub-assy. (A-21). In this case, draw (A-12) strongly by finger tips for removal. In removal of master lens sub-assy. (A-13), make it by locking focus ring in recess for easy removal. (A-13) and inside tube (A-48) sometimes use regulating washer. Then confirm number and thickness thereof.		
5	Zoom leather (A-14) Main pin for helicoid (A-15) Flat screw (A-16) Zoom helicoid sub-assy. (A-17)	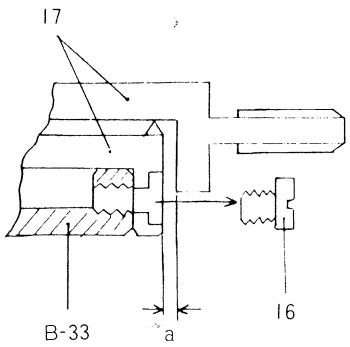 At removing flat screw (A-16), driver is apt to contact inner periphery of helicoid sub-assy. (A-17). Therefore extend helicoid (A-17) and enhance gap a for removal. Before pulling out (A-17) forwardly, confirm position of helicoid male (B-33) by a scribed line since set holes are equally spaced.	T ↓ 16-(S640)-(B-33)	

HEXANON AR

f=50mm 1:1.7 (Automatic)

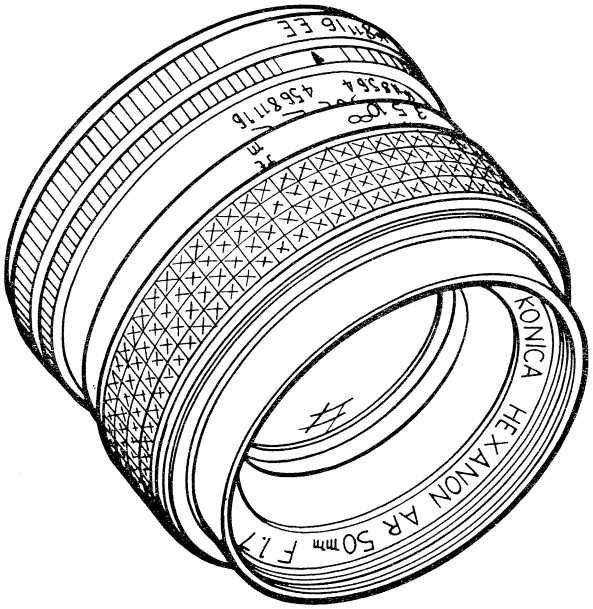

HEXANON AR

MODEL No. 3532

f=50mm 1:1.7 (Automtic)

1	2	3	4	5
Fig. No.	Parts No. or Sub-assembly	部品・部組名称	Parts name or Sub-assembly name	Note
A-1	501	レンズキャップ部組	Lens cap sub-assembly	
	✕07501	レンズキャップ	Lens cap	
	✕07502	キャップバネ	Lens cap spring	
	✕07503	ネームプレート	Name plate	
A-2	07951	彫刻リング	Engraved ring	
A-3	07312	前筒止ネジ	Set screw for front tube	〔S640〕-07311
A-4	07311	前　筒	Front tube	
A-5	07404	締付リング	Set ring	Special tool 〔S640〕-07201
A-6	07151	中　胴	Inside tube	
A-7	701	前群レンズ部組	Front lens sub-assembly	Special tool
	✕07901	第1レンズ	No. 1 lens	
	✕07902	第2レンズ	No. 2 lens	
	✕07903	第3レンズ	No. 3 lens	
	✕07952	前鏡枠	Front lens barrel	
	✕07953	一番玉押え	Set ring for No. 1 lens	
	✕07954	間隔リング	Spacer ring	
A-8	702	後群レンズ部組	Rear lens sub-assembly	Special tool
	✕07904	第4レンズ	No. 4 lens	
	✕07905	第5レンズ	No. 5 lens	
	✕07906	第6レンズ	No. 6 lens	
	✕07981	後鏡枠	Rear lens barrel	
	✕07982	六番玉押え	Set ring for No. 6 lens	
A-9	61265	1.4φ×1.6 平小ネジ	1.4φ×1.6 Flat screw	〔S640〕-07158
A-10	07158	溝カム	Grooved cam	Ⓜ-07108
A-11	07108	ベルクランクローラー	Bell crank roller	Ⓜ-07107
A-12	07154	羽根ケース止ネジ	Set screw for blade case	〔S640〕-07151
A-13	07156	ボール押えA	Set ring A for ball	Special tool 〔S640〕-07151
A-14	51169	1.6φ 鋼球	1.6φ Steel ball	
A-15	07152	基準ネジ	Locating screw	〔S640〕-07151
A-16	07218	フォーカスカバー	Focus ring cover	〔S640〕-07217
A-17	07219	フォーカス光皮	Leather (focus ring)	
A-18	07209	フォーカスリング止ネジ	Set screw for focus ring	〔S640〕-07217

HEXANON AR

MODEL No. 3532

f=50mm 1:1.7 (Autom.tic)

1	2	3	4	5
Fig. No.	Parts No. or Sub-assembly	部品・部組名称	Parts name or Sub-assembly name	Note
A-19	07217	フォーカスリング	Focus ring	
A-20	13143	1.2φ×1.6 皿小ネジ	1.2φ×1.6 Counter sunk screw	〔S640〕-07401
A-21	07403	化粧リング	Covered ring	
A-22	63459	1.7φ×3.5 皿小ネジ	1.7φ×3.5 Counter sunk screw	〔S640〕-07203
A-23	401	マウント部組	Lens mount sub-assembly	
	×07401	マウント	Lens mount	
	×07402	マウント制限ピン	Lens mount limitation pin	
A-24	07451	t=0.03 フランジバック調整座金	Regulating washer for flange back	(t=0.03)
	07452	t=0.05 フランジバック調整座金	Regulating washer for flange back	(t=0.05)
	07453	t=0.06 フランジバック調整座金	Regulating washer for flange back	(t=0.06)
	07454	t=0.08 フランジバック調整座金	Regulating washer for flange back	(t=0.08)
	07455	t=0.10 フランジバック調整座金	Regulating washer for flange back	(t=0.10)
A-25	07306	クリックバネ押え	Cap for click spring	〔S640〕-07301
A-26	07305	クリックバネ	Click spring	
A-27	51169	1.6φ 鋼球	1.6φ Steel ball	
A-28	07334	マニュアルストッパー止ネジ	Set screw for manual stopper	
A-29	07335	マニュアルストッパーバネ	Manual stopper spring	
A-30	331	マニュアルストッパー部組	Manual stopper sub-assembly	
	×07331	マニュアルストッパー	Manual stopper	
	×07332	絞り調整板	Regulating plate for diaphragm	
	×07333	マニュアルストッパーバネ掛け	Spring stud for manual stopper	
	×07339	調整板止ネジ	Set screw for regulating plate	〔S640〕-07331
A-31	07336	1.4φ 絞りリングストッパーa	1.4φ Stopper pin for diaphragm ring	
	07337	1.0φ 絞りリングストッパーb	1.0φ Stopper pin for diaphragm ring	
	07338	1.7φ 絞りリングストッパーc	1.7φ Stopper pin for diaphragm ring	
A-32	07324	EEロックレバー軸	Set screw for EE lock lever	
A-33	07326	EEロックバネ	Spring for EE lock lever	
A-34	323	EEロックレバー部組	EE lock lever sub-assembly	
	×07323	EEロックレバー	EE lock lever	
	×07325	EEロックバネ掛け	Spring stud for EE lock lever	

HEXANON AR

MODEL No. 3532

f=50mm 1:1.7 (Automatic)

1	2	3	4	5
Fig. No.	Parts No. or Sub-assembly	部品・部組名称	Parts name or Sub-assembly name	Note
A-35	321	EEロック釦部組	EE lock button sub-assembly	
	×07321	EEロック釦	EE lock button	
	×07322	EEロック連動ピン	Connection pin for EE lock	
A-37	63285	1.4φ×2.0 皿小ネジ	1.4φ×2.0 Counter sunk screw	〔S640〕-07203
A-38	07304	クリック板A	Click plate A	Ⓔ-51169
A-39	07303	クリック板B	Click plate B	Ⓔ-51169
A-40	65425	1.7φ×2.5 薄平小ネジ	1.7φ×2.5 Thin flat screw	〔S640〕-07203
A-41	07204	直進案内板	Guide plate for helicoid	
	202	ヘリコイド部組	Helicoid sub-assembly	
A-(42)	×07201	ヘリコイド雄	Helicoid male	
A-(43)	×07202	ヘリコイド雌	Helicoid female	
A-(47)	×07203	取付座	Outside tube	
A-(36)	×07301	絞りリング	Diaphragm ring	Ⓔ-07203
A-44	07215	ボール押え B	Set ring B for ball	Special tool 〔S640〕-07203
A-45	51169	1.6φ 鋼球	1.6φ Steel ball	
A-46	07214	リテナー B	Retainer B	
A-48	101	羽根ケース部組	Blade case sub-assembly	
	×07101	羽根ケース	Blade case	
	×07102	駆動リング	Turning ring	
	×07103	駆動ピン A	Turning pin A	
	×07104	駆動ピン B	Turning pin B	
	×07105	リング押え板	Set plate turning ring	
	×07106	ベルクランク	Bell crank	
	×07107	ベルクランクピン	Bell crank pin	
	×07109	ベルクランク軸	Rotation shaft for bell crank	
	×07110	ベルクランクバネ	Spring for bell crank	
	×07113	小座金	Washer	
	×07114	羽根押え板	Blade cover	
	×07116	バネ用柱	Spring stud screw	
	61275	1.4φ×1.8 平小ネジ	1.4φ×1.8 Flat screw	
	61295	1.4φ×2.2 平小ネジ	1.4φ×2.2 Flat screw	
	109	絞り羽根部組	Diaphragm blade sub-assembly	
	×07111	絞り羽根	Diaphragm blade	
	×07112	羽根ダボ	Blade stud	

HEXANON AR

MODEL No. 3532

f=50mm 1:1.7 (Automatic)

1	2	3	4	5
Fig. No.	Parts No. or Sub-assembly	部品・部組名称	Parts name or Sub-assembly name	Note
A-49	07159	作動バネ	Main spring	Ⓜ-07153
A-50	07163	リング押え	Set screw for stopper ring	〔S640〕-07151
A-51	07162	作動バネ柱 B	Stud B for main spring	〔S640〕-07151
A-52	07157	制限リング	Stopper ring	
A-53	151	絞り作動リング部組	Working ring for blade sub-assembly	
	×07153	絞り作動リング	Working ring for blade	
	×07160	作動バネ柱 A	Stud A for main spring	〔S640〕-07153
	×07161	接続ネジ B	Connection set screw B	
A-54	203	絞り接続リング部組	Connection ring for diaphragm sub-assembly	
	×07210	絞り接続リング	Connection ring for diaphragm	
	×07212	マニュアル制限板	Limitation plate	〔S640〕-07210
	07231	本体接続板 A	Connection plate A	To use one according to the diameter of iris 絞り径の傾向をみて1種使用
	07232	本体接続板 B	Connection plate B	
	07233	本体接続板 C	Connection plate C	
	61275	1.4φ×1.8 平小ネジ	1.4φ×1.8 Flat screw	
	63285	1.4φ×2.0 皿小ネジ	1.4φ×2.0 Counter sunk screw	

HEXANON AR

f=50mm 1 : 1.7 (Automatic)

A

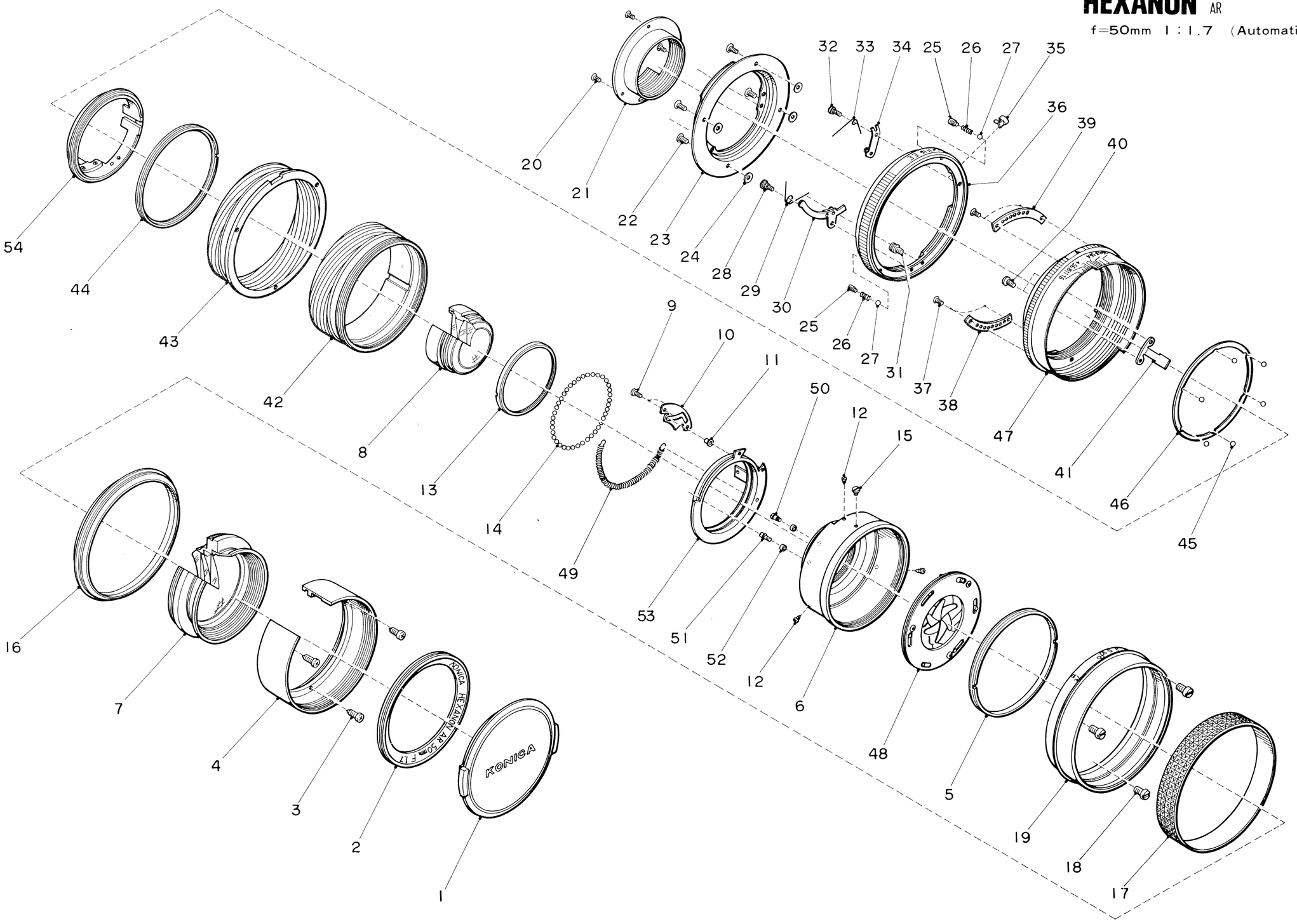

HEXANON AR

MODEL No. 3532

f=50mm 1:1.7 (Automatic)

1	2	3	4	5
Fig. No.	Parts No. or Sub-assembly	部品・部組名称	Parts name or Sub-assembly name	Note
	101	羽根ケース部組	Blade case sub-assembly	
B-1	61295	1.4φ×2.2 平小ネジ	1.4φ×2.2 Flat screw	
B-2	×07114	羽根押え板	Blade cover	
B-3	×07113	小座金	Washer	
B-4	109	絞り羽根部組	Diaphragm blade sub-assembly	
B-5	61275	1.4φ×1.8 平小ネジ	1.4φ×1.8 Flat screw	
B-6	×07116	バネ用柱	Spring stud screw	
B-7	×07105	リング押え板	Set plate for turning ring	
B-8	×07110	ベルクランクバネ	Bell crank spring	
B-9	×07102	駆動リング	Turning ring	
B-10	×07109	ベルクランク回転軸	Rotation shaft for bell crank	
B-11	×07106	ベルクランク	Bell crank	
B-12	×07101	羽根ケース	Blade case	
	151	絞り作動リング部組	Working ring for blade sub-assembly	
B-13	×07160	作動バネ柱 A	Stud A for main spring	〔S640〕-07153
B-14	×07161	接続ネジ B	Connection set screw B	〔S640〕-07153
B-15	×07153	絞り作動リング	Working ring for blade	
	203	絞り接続リング部組	Connection ring for diaphragm sub-assembly	
B-16	61275	1.4φ×1.8 平小ネジ	1.4φ×1.8 Flat screw	〔S640〕-07210
B-17	×07212	マニュアル制限板	Limitation plate	〔S640〕-07210
B-18	63285	1.4φ×2.0 皿小ネジ	1.4φ×2.0 Counter sunk screw	〔S640〕-07210
B-19	07231	本体接続板 A	Connction plate A	〔S640〕-07210 To use one according to the diameter of iris 絞り径の傾向をみて1種使用
	07232	本体接続板 B	Connection plate B	
	07233	本体接続板 C	Connection plate C	
B-20	×07210	絞り接続リング	Connection ring for diaphragm	
	331	マニュアルストッパー部組	Manual stopper sub-assembly	
B-21	07339	調整板止めネジ	Set screw for ragulating plate	〔S640〕-07331
B-22	×07333	マニュアルストッパーバネ掛け	Spring stud for manual stopper	
B-23	07332	絞り調整板	Regulating plate for diaphragm	〔S640〕-07331
B-24	×07331	マニュアルストッパー	Manual stopper	

HEXANON AR B

f=50mm 1 : 1.7 (Automatic)

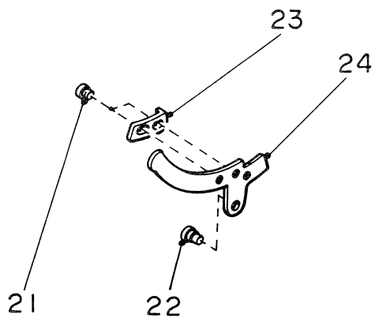

331

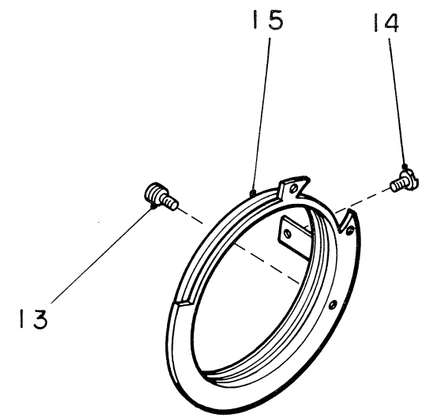

151

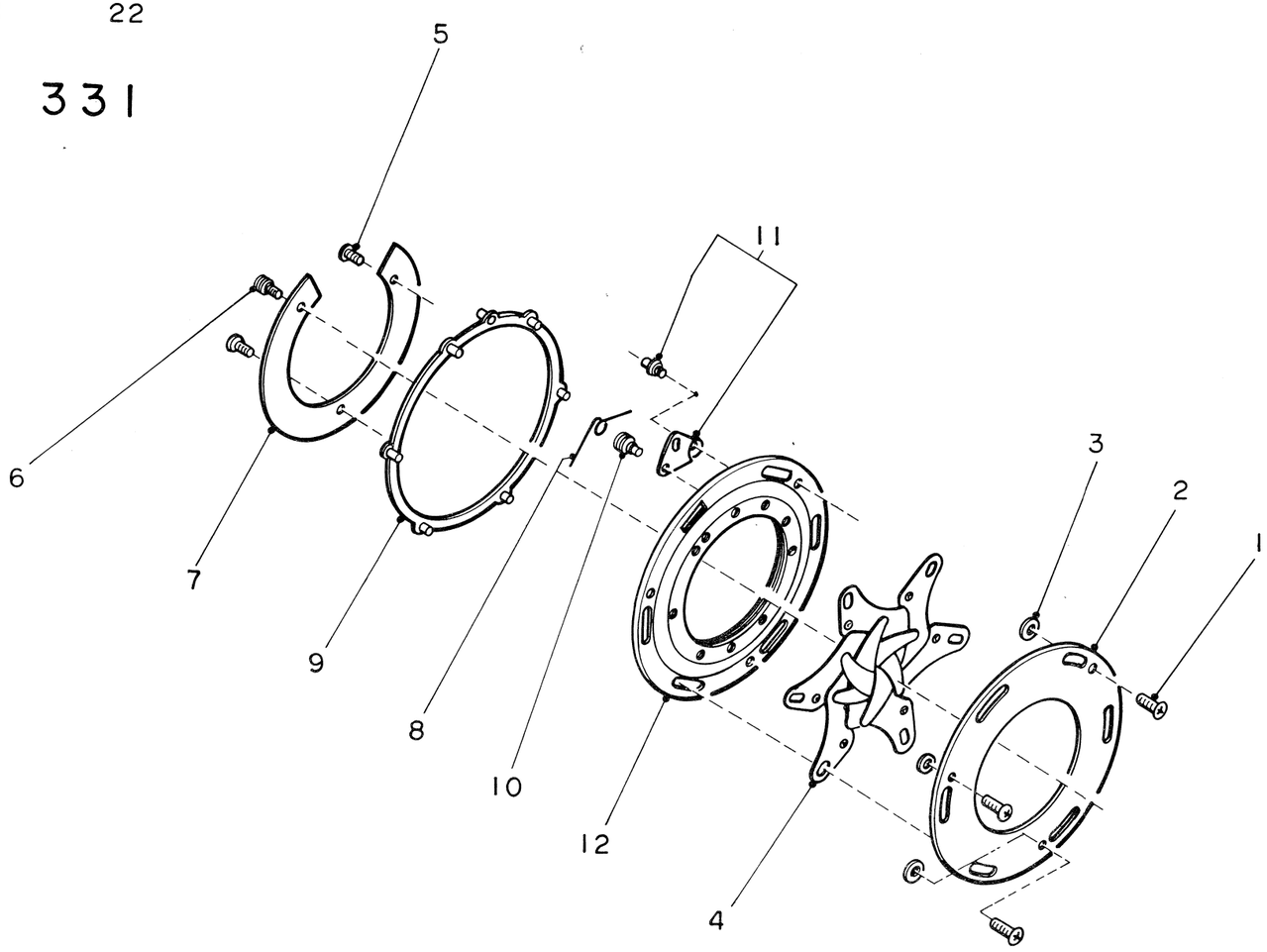

101

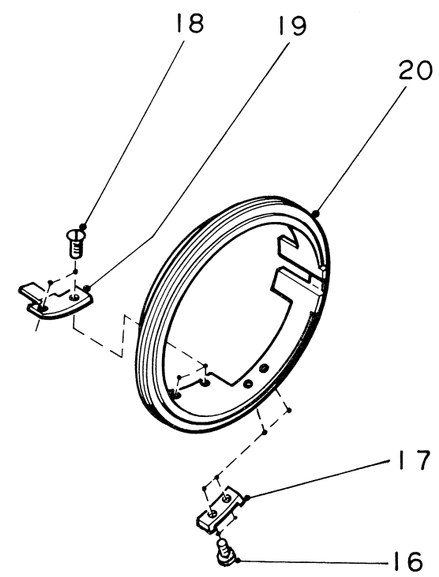

203

Konica 50MM/F1.8
HEXANON AR

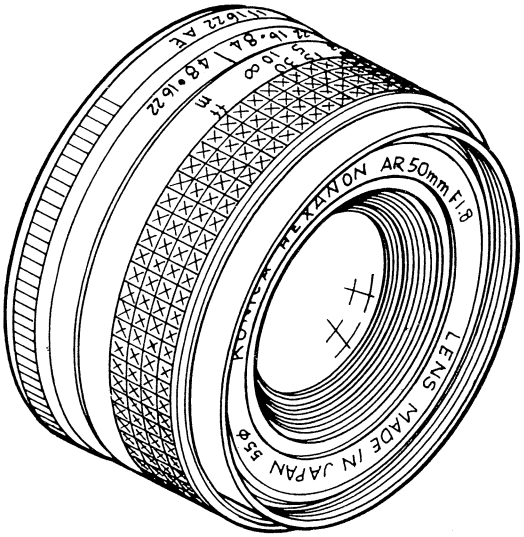

KONICA HEXANON INTERCHANGEABLE LENSES LIST OF ASSEMBLY PARTS INCLUDING COMMON PARTS

ヘキサノン交換レンズ 部品部組リスト兼共通部組部品一覧表

The assemblies and parts marked by the same symbol respectively in the table are usable commonly regardless of the model. However, the assemblies and parts marked ○ and □ are exclusive and are not interchangeable with models.

表中、同一符号の部組品及び部品については機種に関係なく共通に使用出来ます。
但し、○、□印の部組品及び部品は専用部品であり機種間の互換性はない。

Sub-assy No. / Parts No. 部組番号 部品番号	Sub-assy Name / Parts Name 部組・部品名称	Sort 分類	WIDE ANGLE LENS 広角レンズ			STANDERD LENS 標準レンズ		ZOOM LENS ズームレンズ	
		f : F	21mm F2.8	24mm F2.8	35mm F2.8	40mm F1.8	50mm F1.8	35～70mm F3.5	70～150mm F 4
		Model No. 製番	3335	3331	3421	3311	3325	3578	3568
		Model Name 略称	IRA	ISA	ILA	BRA	BTA	KRA	KZA
101	羽根ケース部組	Blade case sub-assy						○	○
109	絞り羽根部組	Diaphragm blade sub-assy	⊗	⊗	⊗	⊗	○	○	○
202	ヘリコイド部組	Helicoid sub-assy	○	○	○	○	○		
203	接続リング部組	Diaphragm connection ring sub-assy	⊗	⊗	○	⊗	○	○	○
251	ズーム部組	Zoom sub-assy						○	○
261	ヘリコイド部組	Helicoid sub-assy							○
267	ズームフォーカス部組	Zoom focus sub-assy							○
401	マウント部組	Lens mount sub-assy	◐	◐	◐	◐	◐	◐	◐
501	レンズキャップ部組	Lens cap sub-assy	⊕	⊕	⊕	⊕	⊕	⊕	⊕
531	フード部組	Lens hood sub-assy							○
701	前群レンズ部組	Front lens sub-assy	○	○	○	○	○		○
702	後群レンズ部組	Rear lens sub-assy	○	○	○	○	○		○
703	V2レンズ部組	V2 lens sub-assy							○
704	Mレンズ部組	M lens sub-assy							○
708	RC後群レンズ部組	RC Rear lens sub-assy						○	
709	RC前群レンズ部組	RC Front lens sub-assy						○	
07101	羽根ケース	Blade case	⊡	⊡	⊡	⊡	□	□	□
07102	駆動リング	Turning ring	■	■	□	■	□	□	□
07159	作動バネ	Main spring	▣	▣	▣	▣	▣	□	□
07164	作動バネかけ	Main spring hang plate	⊠	⊠	⊠	⊠	⊠	⊠	
07204	直進案内板	Helicoid guide plate	◇	◇	⊕	◇	⊕		
07209	フォーカスリング止めネジ	Focus ring set screw	◆	◆	◆	◆	□		
07215	ボール押え枠	Steel ball set ring	▨	▨	▨	▨	▨	▨	▨
07219	フォーカスリング光皮	Focus ring leather	□	◆	◆	□	◆		
07301	絞りリング	Diaphragm ring	⊕	⊕	⊕	●	●	□	□
07305	クリックバネ	Click spring	⊞	⊞	⊞	⊞	⊞	□	⊞
07306	クリックバネ柱	Click spring stud	◧	◧	◧	◧	◧	□	◧
07311	前　筒	Front tube	□	○	○	□	□	□	
07321	AEロックレバー	AE lock lever	◥	◥	◥	◥	◥	◥	◥
07322	AEロックレバー軸	AE lock lever shaft	⋈	⋈	⋈	⋈	⋈	⋈	⋈
07326	AEロックレバーバネ	AE lock lever spring	□	□	□	□	□	□	□
07403	化粧リング	Covered ring	△	△	△	□	□	□	□
07407	化粧リング止めネジ	Covered ring set screw	◪	◪	◪	◪	◪	◪	◪
07511	マウントキャップ	Lens mount cap	▥	▥	▥	▥	▥	▥	▥
07984	後鏡枠押えリング	Rear lens barrel set ring	◣	◣	◣				□
07985	ピント調整座金　t=0.02	Regulation washer t=0.02	◭	◭					□
07986	ピント調整座金　t=0.05	Regulation washer t=0.05	⬓	⬓					□
07987	ピント調整座金　t=0.3	Regulation washer t=0.3		▼	▼				□

A-1 Konica HEXANON AR 50MM/F1.8 MODEL No. 3325

1	2	3	4	5	6
Fig. No.	Parts No. or Sub-assembly	部品・部組名称	Parts name or Sub-assembly name	Note	Disassembling Fig. index
A-1	07951	彫刻リング	Engrave ring		
A-2	61444	1.7φ×3.0 ナベ小ネジ	1.7φ×3.0 Plus pan head screw	〔S640〕-07311	
A-3	07311	前 筒	Front tube		
A-4	07209	特殊押えネジ	Special set screw	〔T.B〕-07952	
A-5	701	前群レンズ部組	Front lens sub-assy		B
A-6	07407	化粧リング止めネジ	Covered ring set screw		
A-7	07403	化粧リング	Covered ring	〔T.B〕-07401	
A-8	07983	第6レンズ押え枠	Set ring No.6 lens	〔T.B〕-07151	
A-9	07906	第6レンズ	No.6 lens		
A-10	07982	第5、第6レンズ間隔リング	No.5, No.6 lens spacer ring		
A-11	702	第4、第5レンズ部組	No.4, No.5 lens sub-assy		B
A-12	07219	フォーカスリング光皮	Focus ring leather		
A-13	07209	特殊押えネジ	Special set screw	〔S640〕-07217	
A-14	07217	フォーカスリング	Focus ring		
A-15	07103	羽根ケース押え枠	Blade case set ring	〔T.B〕-07151	
A-16	07118	固定絞り	Fixed diaphragm		
A-17	07101	羽根ケース	Blade case		
A-18	109	絞り羽根部組	Diaphragm blade sub-assy		B
A-19	07102	駆動リング	Turning ring		
A-20	63489	1.7φ×5.0 皿小ネジ	1.7φ×5.0 Plus counter sunk screw	〔S640〕-07203	
A-21	401	マウント部組	Lens mount sub-assy		B
A-22	07301	絞りリング	Diaphragm ring		
A-23	51209	2.0φ 鋼球	2.0φ Steel ball	Ⓜ-07203	
A-24	07326	AEロックレバーバネ	AE lock lever spring		
A-25	07322	AEロックレバー軸	AE lock lever shaft		
A-26	07321	AEロックレバー	AE lock lever		
A-27	07305	クリックバネ	Click spring	Ⓜ-51209	
A-28	07306	クリックバネ柱	Click spring stud		
A-29	65264	1.4φ×1.6 ナベ小ネジ	1.4φ×1.6 Plus pan head screw	〔S640〕-07206	

Konica HEXANON AR 50MM/F1.8

MODEL No. 3325

1	2	3	4	5	6
Fig. No.	Parts No. or Sub-assembly	部品・部組名称	Parts name or Sub-assembly name	Note	Disassembling Fig. index
A-30	07206	深度目盛リング	Depth scale ring		
A-31	07159	作動バネ	Main spring	Ⓜ-07210	
A-32	65284	1.4φ×2.0 ナベ小ネジ	1.4φ×2.0 Plus pan head screw	〔S640〕-07164	
A-33	07164	作動バネ掛け	Main spring hang plate		
A-34	07215	ボール押え枠	Steel ball set ring	〔S640〕-07401	
A-35	51160	1.6φステンレス球	1.6φ Stainless steel ball		
A-36	203	接続リング部組	Diaphragm connection ring sub-assy		B
A-37	61444	1.7φ×3.0 ナベ小ネジ	1.7φ×3.0 Plus pan head screw	〔S640〕-07204	
A-38	07204	直進案内板	Helicoid guide plate	Ⓖ-07151	
A-39	202	ヘリコイド部組	Helicoid sub-assy		B

Konica HEXANON AR 50MM/F1.8 A

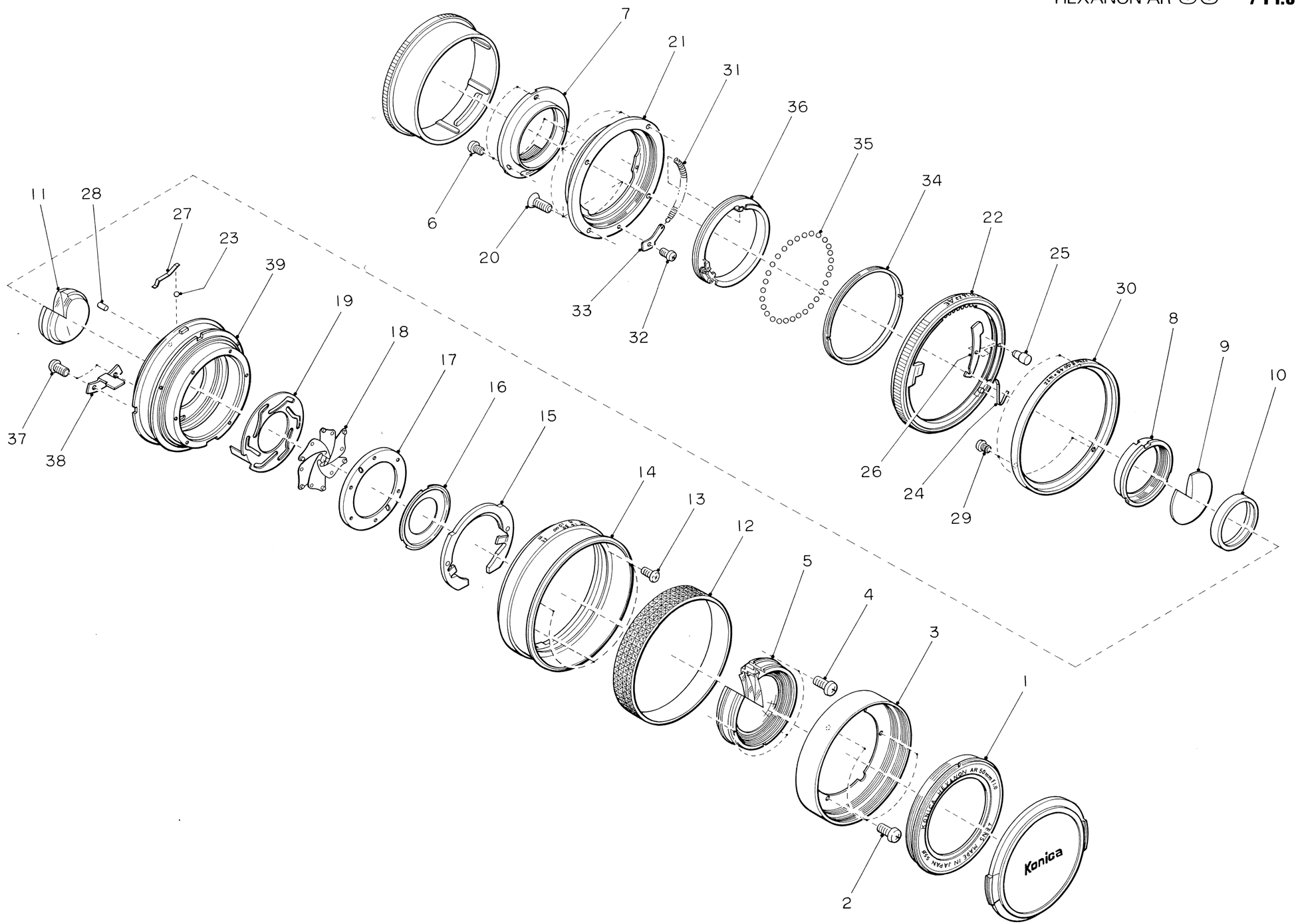

Konica HEXANON AR 50MM/F1.8

MODEL No. 3325

1	2	3	4	5	6
Fig. No.	Parts No. or Sub-assembly	部品・部組名称	Parts name or Sub-assembly name	Note	Disassembling Fig. index
	109	絞り羽根部組	Diaphragm blade sub-assy		
B-1	X07112	羽根ダボ	Diaphragm blade dowell		
B-2	X07111	絞り羽根	Diaphragm blade		
	202	ヘリコイド部組	Helicoid sub-assy		
B-3	X07151	中　胴	Inside tube	Ⓖ-07202	
B-4	X07202	ヘリコイド雌	Helicoid female	Ⓖ<07151 07203	
B-5	X07203	取付座	Outside tube	Ⓖ-07202	
	203	接続リング部組	Diaphragm connection ring sub-assy		
B-6	65324	1.4φ×3.0 ナベ小ネジ	1.4φ×3.0 Plus pan head screw	〔S640〕-07231	
B-7	X07231	本体接続板	Connection plate		
B-8	65324	1.4φ×3.0 ナベ小ネジ	1.4φ×3.0 Plus pan head screw	〔S640〕-07212	
B-9	X07212	接続レバー	Connection lever		
B-10	X07210	接続リング	Connection ring		
	401	マウント部組	Lens mount sub-assy		
B-11	X07402	マウント制限ピン	Lens mount limtation screw	〔S640〕-07401	
B-12	X07401	マウント	Lens mount		
	701	前群レンズ部組	Front lens sub-assy		
B-13	X07953	第1レンズ押え枠	Set ring No.1 lens	〔T.B〕-07952	
B-14	X07901	第1レンズ	No.1 lens		
B-15	X07954	第1、第2レンズ間隔リング	No.1, No.2 lens spacer ring		
B-16	X07902	第2レンズ	No.2 lens		
B-17	X07903	第3レンズ	No.3 lens		
B-18	X07952	前鏡枠	Front lens barrel		

Konica HEXANON AR 50MM/F1.8

MODEL No. 3325

1	2	3	4	5	6
Fig. No.	Parts No. or Sub-assembly	部品・部組名称	Parts name or Sub-assembly name	Note	Disassembling Fig. index
	702	第4、第5レンズ部組	No.4, No.5 lens sub-assy		
B-19	X07904	第4レンズ	No.4 lens		
B-20	X07905	第5レンズ	No.5 lens		

Konica HEXANON AR 50MM/F1.8 B

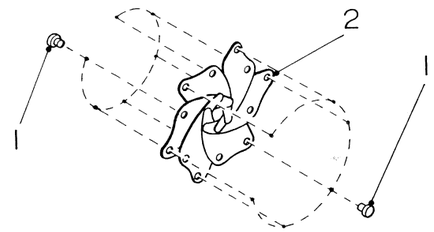

109

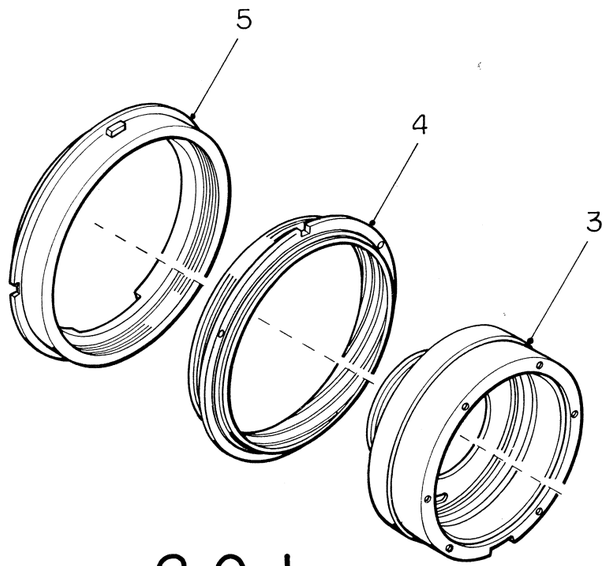

201

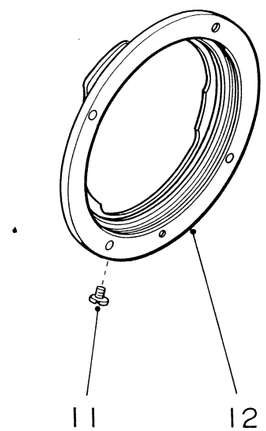

401

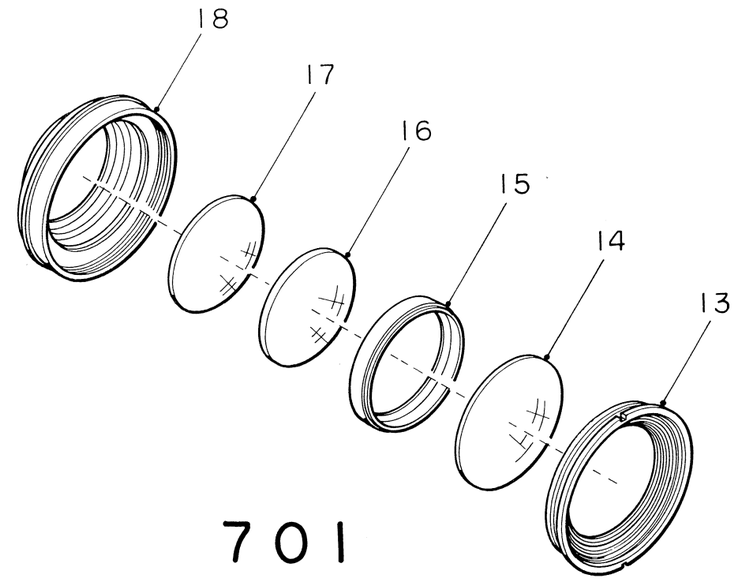

701

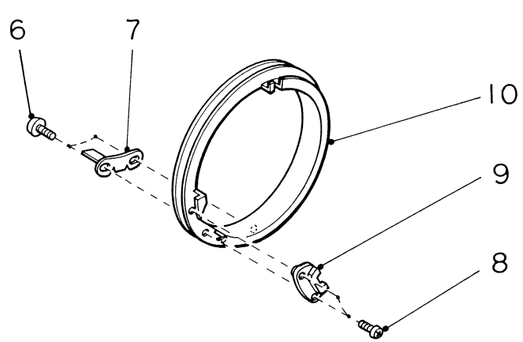

203

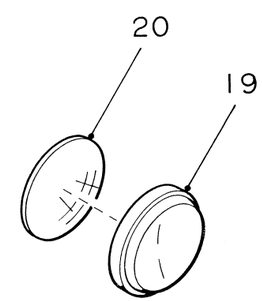

702

DISASSEMBLING PROCEDURES

Seq.	Parts, Sub-Ass'y to be disassembled (Fig. No.)	Description	Solvent	Exclusive Tools
1	Engrave ring (A-1) 1.7ø x 3.0 plus pan head screw (A-2) Front tube (A-3) Special set screw (A-4) Front lens sub-assembly (A-5)	1. Remove the engrave ring (A-1) by turning at the universal driver in a counter-clockwise direction. 2. Remove the front tube (A-3) by taking out the three 1.7ø x 3.0 plus pan head screws (A-2). Next, by taking out the three special set screws (A-4), the front lens sub-assembly (A-5) can be removed. 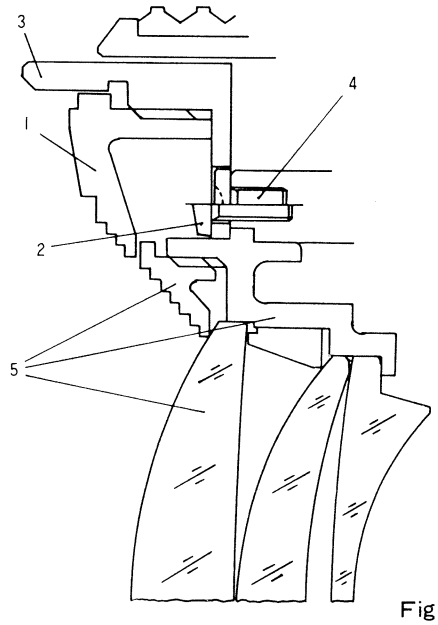 Fig-1 * Use the solvent is methanol for three-Bond 1401B(T.B)	T ↓ 2-(S640)-3 M ↓ 4-(T.B)-5	
2	Covered ring set screw (A-6) Covered ring (A-7) Set ring No.6 lens (A-8) No.6 lens (A-9) No.5-No.6 lens spacer ring (A-10) No.4-No.5 lens sub-assembly (A-11)	1. Covered ring (A-7) is often glued with threebond 1401B, them pull it strongly. 2. Mate universal driver with notch of set ring No.6 lens (A-8) and rotate detach it. 3. After removing the No.6 lens (A-9), No.5-No.6 spacer ring (A-10), and No.4 - No.5 lens sub-assembly (A-11) can be removed in the order mentioned. * Do not use adhesive solvent on external resin molded parts.	M ↓ 8-(T.B)-(B-3)	

DISASSEMBLING PROCEDURES

Seq.	Parts, Sub-Ass'y to be disassembled (Fig. No.)	Description	Solvent	Exclusive Tools
		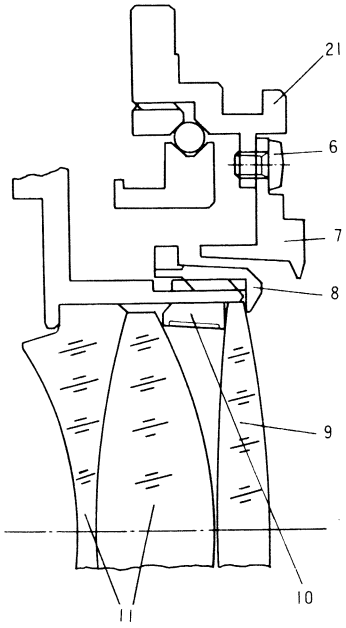 Fig-2		
3	Focus ring leather (A-12) Special set screw (A-13) Focus ring (A-14)	1. So that reassembly is facilitated, make an alignment mark as shown in the diagram to indicate the contact position between the focus ring (A-14) and the helicoid female (B-4). 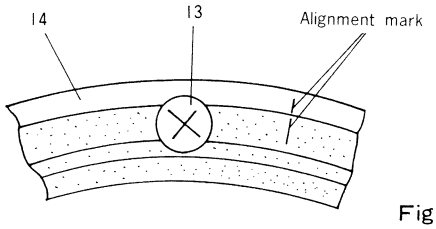 Fig-3 2. It is best not to remove the focus ring leather (A-12) unless absolutely necessary.	T ↓ 13-(S640)-14	
4	Blade case set ring (A-15) Fixed diaphragm (A-16) Blade case (A-17)	1. Before dismantling, in order to facilitate re-assembly, make an alignment mark as shown in the diagram to indicate the contact position between the blade case (A-17) and the inside tube (B-3).		

DISASSEMBLING PROCEDURES

Seq.	Parts, Sub-Ass'y to be disassembled (Fig. No.)	Description	Solvent	Exclusive Tools
	Diaphragm blade sub-assembly (A-18) Turning ring (A-19)	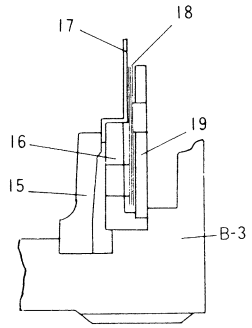 Fig-4 2. Remove the blade case set ring (A-15), lower the front lens position and quietly take off in one piece the blade case (A-17), diaphragm blade sub-assembly (A-18) and turning ring (A-19).	M ↓ 15-(T.B)-(B-3)	
5	1.7ø x 5.0 plus counter sunk screw (A-20) Lens mount sub-assembly (A-21) Diaphragm ring (A-22) 2.0ø steel ball (A-23) AE lock lever spring (A-24) AE lock lever shaft (A-25) AE lock lever (A-26) Click spring (A-27) Click spring stud (A-28)	1. Set the diaphragm ring (A-22) at F22 and remove the lens mount sub-assembly (A-21) and diaphragm ring (A-22) in the following numerical order. 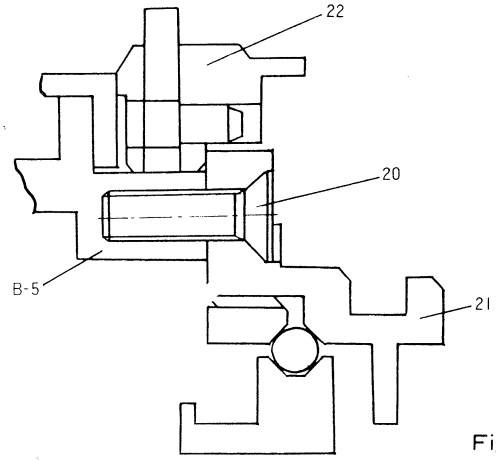 Fig-5 2. The AE lock lever shaft (A-25) is wedged into the diaphragm ring (A-22) and may be pulled out from the mount with a fine-tipped object such as a pin. 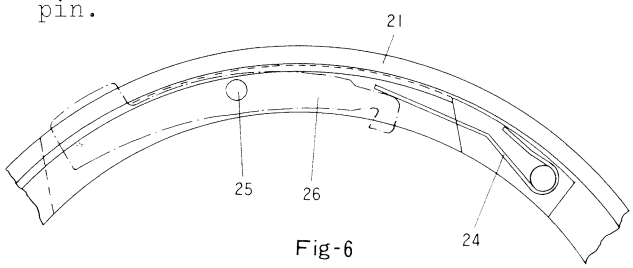 Fig-6	T ↓ 20-(S640)-(B-5)	

DISASSEMBLING PROCEDURES

Seq.	Parts, Sub-Ass'y to be disassembled (Fig. No.)	Description	Solvent	Exclusive Tools
		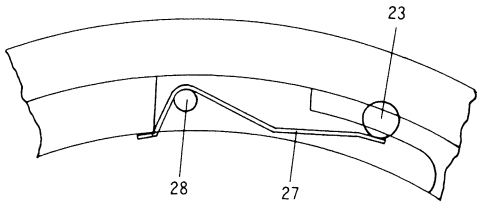 Fig-7		
6	1.4 ø x 1.6 plus pan head screw (A-29) Depth scale ring (A-30)	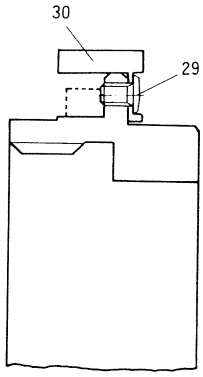 Fig-8	[T] ↓ 29-(S640)-30	
7	Main spring (A-31) 1.4 ø x 2.0 plus pan head screw (A-32) Main spring hang plate (A-33) Steel ball set ring (A-34) 1.6 ø stainless steel ball (A-35) Diaphragm connection ring sub-assembly (A-36)	1. When removing the steel ball set ring (A-34), place the 1.6 ø stainless steel balls (A-35) in a suitable container so that they do not scatter. 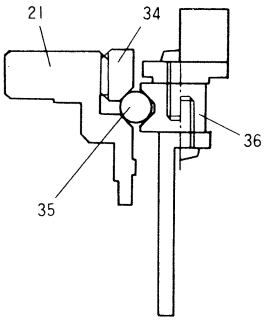 Fig-9 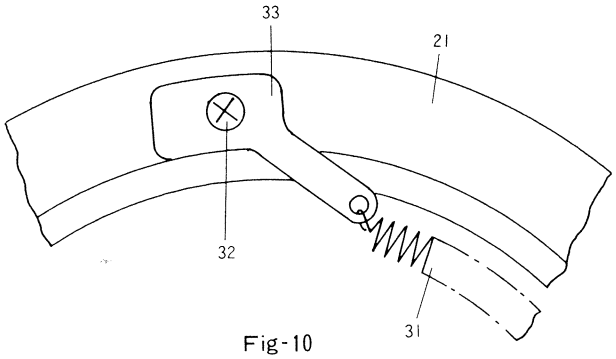 Fig-10	[T] ↓ 32-(S640)-21 [T] ↓ 34-(S640)-21	

DISASSEMBLING PROCEDURES

Seq.	Parts, Sub-Ass'y to be disassembled (Fig. No.)	Description	Solvent	Exclusive Tools
8	1.7ø x 3.0 plus pan head screw (A-37) Helicoid guide plate (A-38) Inside tube (B-3) Helicoid female (B-4) Outside tube (B-5)	1. Record the standard dimensions of A and B in diagram: the gap between the guide groove (lower position) of the inside tube (B-3) and the helicoid female (B-4) notch (upper position), and the protrusion (upper position) of the outside tube (B-5). Standard dimension A= 3.3 ±0.2mm B= 16.0 ±0.1mm 2. Be sure to use the notch holes of the various respective parts in the interlocked position just before removal of the helicoid screws for the inside tube (B-3) and the helicoid female (B-4). 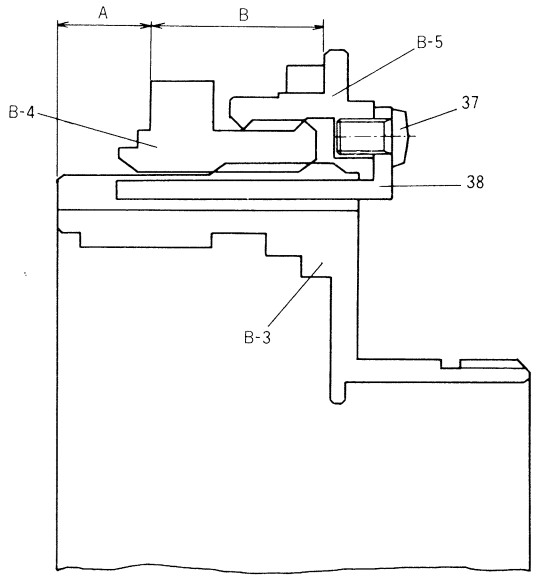 Fig-11	T ↓ 37-(S640)-38	

ASSEMBLING PROCEDURES

Seq.	Parts, Sub-Ass'y to be assembled (Fig. No.)	Description	Adhesive Lubricant	Exclusive Tools
1	Lens mount sub-assembly (A-21) Diaphragm connection ring sub-assembly (A-36) 1.6 ø stainless steel ball (A-35) Steel ball set ring (A-34) Main spring hang plate (A-33) 1.4 ø x 2.0 plus pan head screw (A-32) Main spring (A-31)	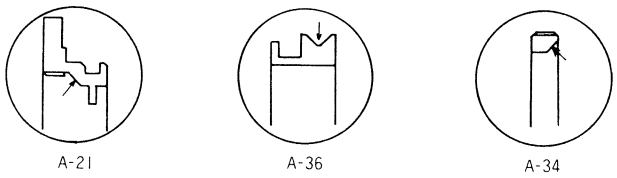 A-21 A-36 A-34 Fig-1 1. Confirm that no flaw existe at arrowed positions above, If any flaw is found, change with new part. 2. Put the lens mount sub-assembly (A-21) and the diaphragm connection ring sub-assembly (A-36) on a work table and rollin the 1.6 ø stainless steel balls (A-35) carefully by turning the steel ball set ring (A-34). 3. Take marginal space for two balls all over periphery. 4. If when the steel ball set ring of the diaphragm connection ring sub-assembly was attached the arrow directions were all within 0.1, operation will be smooth. A cause of unsmooth operation is gaps at the places indicated by arrows on seq. 1 from the attachment of the steel ball set ring. 5. The sundain 640 is attached at three points around the circumference. 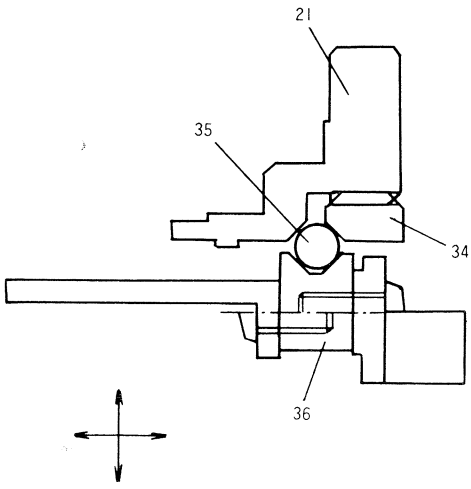 Fig-2	34-(S640)-21	

ASSEMBLING PROCEDURES

Seq.	Parts, Sub-Ass'y to be assembled (Fig. No.)	Description	Adhesive Lubricant	Exclusive Tools
		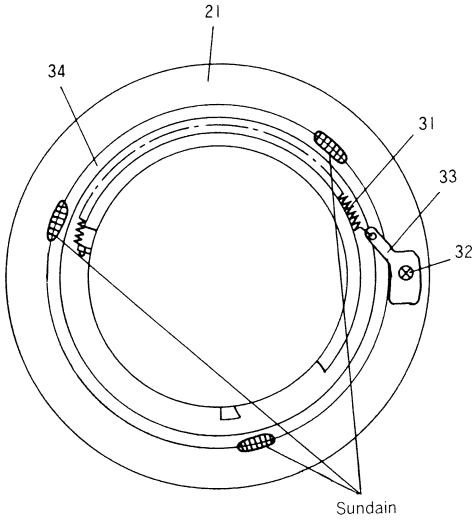 Fig-3		
		* The above mount unit is reserved until procedure 4.		
2	Outside tube (B-5) Helicoid female (B-4) Inside tube (B-3)	1. Assemble just in the same position as when disassembled. 2. Compare with the reference dimensions recorded before disassembly. Use extreme care as imperfect adjustment on succeeding process. 3. Confirm smoothness of helicoid movement. 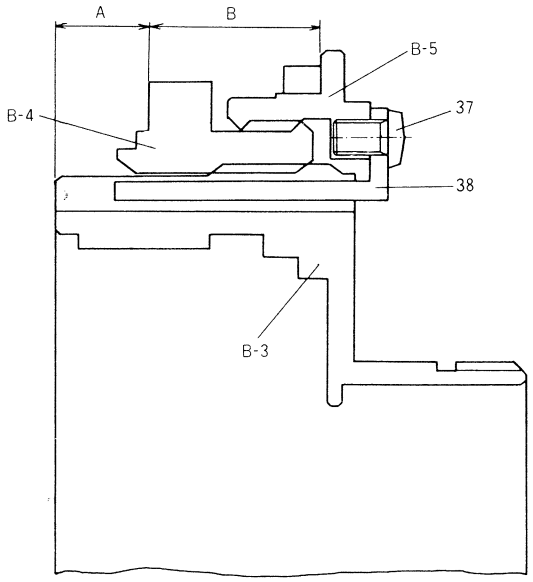 Fig-4	(B-5)-Ⓖ-(B-4)-(B-3)	

ASSEMBLING PROCEDURES

Seq.	Parts, Sub-Ass'y to be assembled (Fig. No.)	Description	Adhesive Lubricant	Exclusive Tools
3	Helicoid guide plate (A-38) 1.4 ø x 3.0 plus pan head screw (A-37)	1. Keep assembly tolerance between inside tube (B-3) and helicoid guide plate (A-38) at minimum as far as helicoid moves smoothly. 2. After assembly confirm smooth movement of helicoid by trial operation. Take care not detach (A-38) out of slot of (B-3). 3. After confirmation of helicoid movement, wipe excess oil oozed out of helicoid screw. 4. Apply helicoid grease to both sides of the helicoid guide plate and install into the inside tube. 5. Turn the helicoid ten rotations. Remove excess grease that comes out. 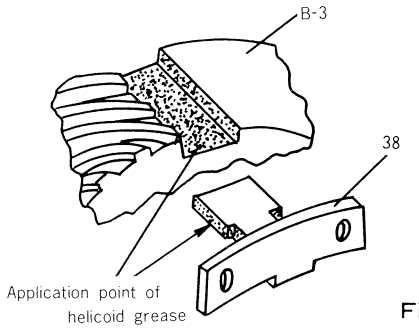 Fig-5	37-(S640)-38	
4	Depth scale ring (A-30) 1.4 ø 2.0 plus pan head screw (A-29)	1. Attach the central guide line of the depth scale ring (A-30) to the protrusion (upper position) of the outside tube (B-5) and set with 1.4 ø x 2.0 plus pan head screw (A-29). 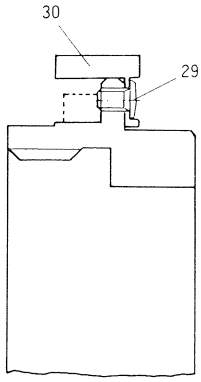 Fig-6	29-(S640)-30	

ASSEMBLING PROCEDURES

Seq.	Parts, Sub-Ass'y to be assembled (Fig. No.)	Description	Adhesive Lubricant	Exclusive Tools
5	Click spring stud (A-28) Click spring (A-27) AE lock lever (A-26) AE lock lever shaft (A-25) AE lock lever spring (A-24) 2.0ø steel ball (A-23) Diaphragm ring (A-22) Lens mount sub-assembly (A-21) 1.7ø x 5.0 plus counter sunk screw (A-20)	1. Apply a small amount of molycoat to the inside of the diaphragm ring (A-22). Put the 2.0ø steel ball (A-23) into the click groove and insert into the outside tube (B-5). Check the click and AE lock movement operations. 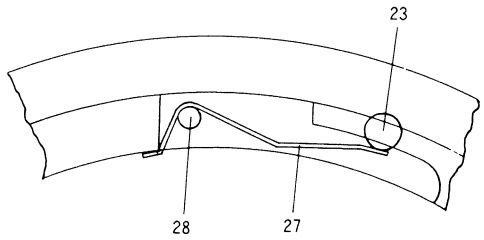 Fig-7 2. Take the lens mount sub-assembly (A-21) put together in procedure 1 and the diaphragm connection ring sub-assembly (A-36) and completely insert the inner protrusion of the diaphragm ring into the notch of the connecting ring (abount 100°). Attach the mount 3mm wide spot in line with the red guide mark of the depth scale ring (A-30). 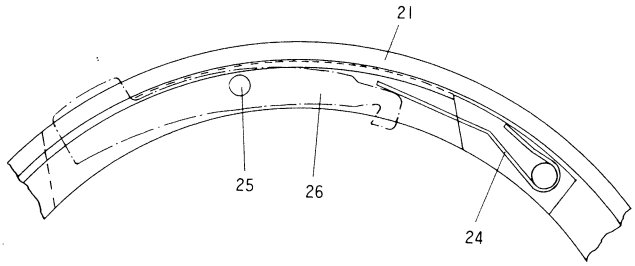 Fig-8 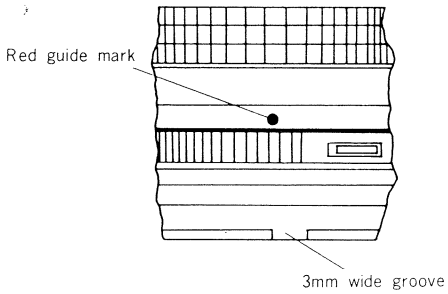 Fig-9	22-Ⓜ-23 20-(S640)-(B-5)	

ASSEMBLING PROCEDURES

Seq.	Parts, Sub-Ass'y to be assembled (Fig. No.)	Description	Adhesive Lubricant	Exclusive Tools
6	Turning ring (A-19) Diaphragm blade sub-assembly (A-18) Blade case (A-17) Fixed diaphragm (A-16) Blade case set ring (A-15)	1. Attach the fixed diaphragm (A-16) to the blade case (A-17). The turning ring (A-19) should be assembled to the inside tube (B-3) with the 4mm wide protrusion engaged with the connection lever (B-9). 2. Attach blade case accordingly to alignment mark at disassembly. 3. When checking the opening of diaphragm, driver, etc. having such diameter as shown below is used.		

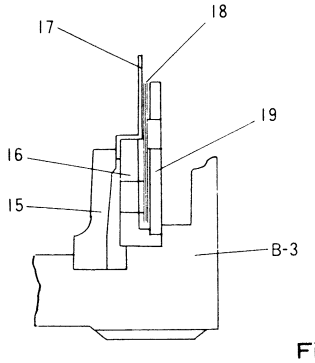

Fig-10

unit : mm

F No.	2	5.6	16
Reference Diameter	15.6 ~ 19.6	5.5 ~ 6.9	2.0 ~ 2.5

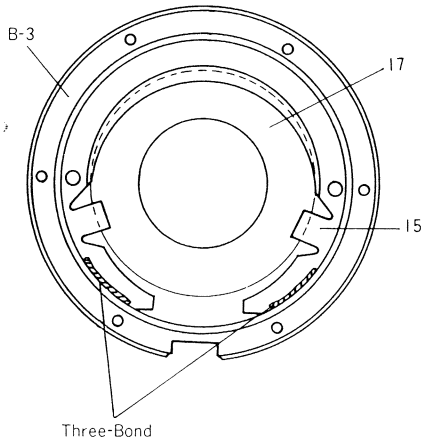

Fig-11

ASSEMBLING PROCEDURES

Seq.	Parts, Sub-Ass'y to be assembled (Fig. No.)	Description	Adhesive Lubricant	Exclusive Tools
		4. Adjustment of the diaphragm aperture is made by turning the blade case. Clockwise turning when viewed from the front makes the diaphragm blade become larger. Counter-clockwise turning when viewed from the front makes the diaphragm blade become smaller. 5. The diaphragm blade is adjusted on auto by moving the connection plate (B-7) back and forth. When viewed from the mount side --- Diaphragm blade becomes larger by turning in a counter-clockwise direction. Diaphragm blade becomes smaller by turning in a clockwise direction. * After adjustment, fasten blade case set ring (A-15) with glue.	15-(T·B)-16	
7	Focus ring (A-14) Special set screw (A-13) Focus ring leather (A-12)	1. Put the focus ring leather (A-12) on the focus ring (A-14). 2. Position the infinity mark ∞ of the focus ring in line with the center mark on the depth scale ring (A-30) and fix with the special set screw (A-13) at the alignment mark made during disassembly. 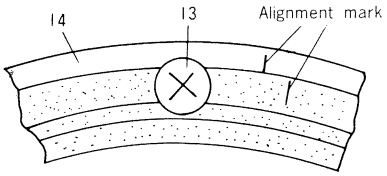 Fig-12		

ASSEMBLING PROCEDURES

Seq.	Parts, Sub-Ass'y to be assembled (Fig. No.)	Description	Adhesive Lubricant	Exclusive Tools
8	No.4-No.5 lens sub-assembly (A-11) No.5-No.6 lens spacer ring (A-10) No.6 lens (A-9) Set ring No.6 lens (A-8) Front lens sub-assembly (A-5) Special set screw (A-4)	1. Assemble No.4-No.5 lens sub-assembly (A-11), No.5-No.6 lens spacer ring (A-10), No.6 lens (A-9), set ring No.6 lens (A-8), and front lens sub-assembly (A-5) in that order, making sure that no dirt and dust go in the lenses. 2. The setting positions of the special set screws (A-4) are shown in the figure below. 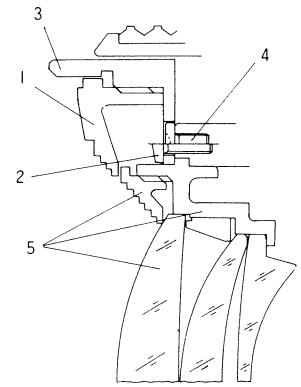 Fig-13 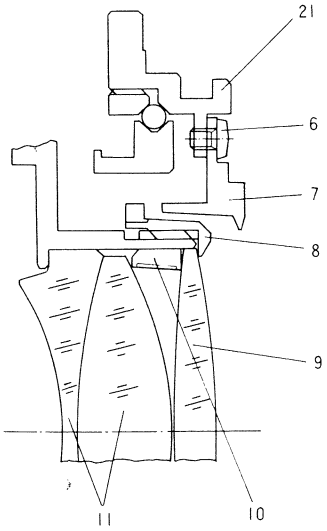 Fig-14 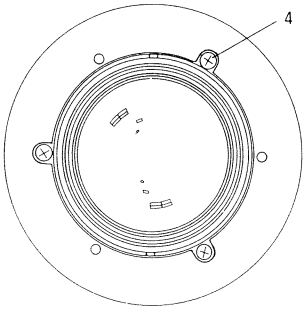 Fig-15	8-(T.B)-(B-3) 4-(T.B)-5	

ASSEMBLING PROCEDURES

Seq.	Parts, Sub-Ass'y to be assembled (Fig. No.)	Description	Adhesive Lubricant	Exclusive Tools
9	*ff* adjustment	Use a collimator when installing the lens into the camera body. 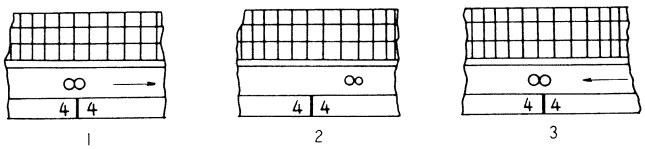 Fig-16 1. Carefully turn the focus ring (A-14) toward the close focus range, bringing the helicoid gradually into focus. 2. When the focus position has been attained, set the focus ring (A-14) with the special set screw (A-13). 3. Turn the focus ring (A-14) taking care not the rotate the helicoid female (B-4), and match the infinity mark to the fixed index. Then tighten the special set screws (A-13).	13-[S640]-14 (B-4)	
10	Front tube (A-3) 1.7ø x 3.0 Plus pan head screw (A-2) Engrave ring (A-1)	1. Fixed the engrave ring (A-1) by turning at the universal driver in a clockwise direction. 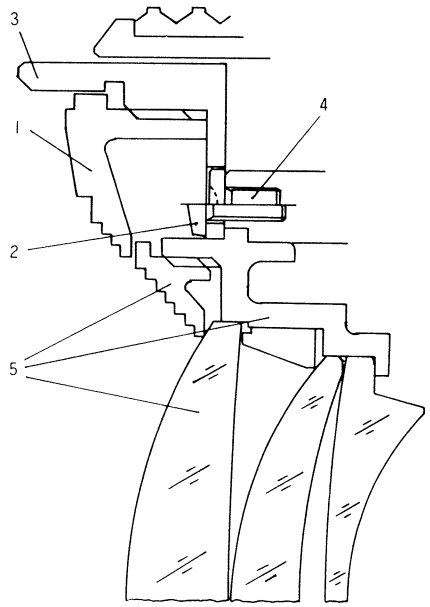 Fig-17	2-[S640]-3	

ASSEMBLING PROCEDURES

Seq.	Parts, Sub-Ass'y to be assembled (Fig. No.)	Description	Adhesive Lubricant	Exclusive Tools
11	Covered ring (A-7) Covered ring set screw (A-6)	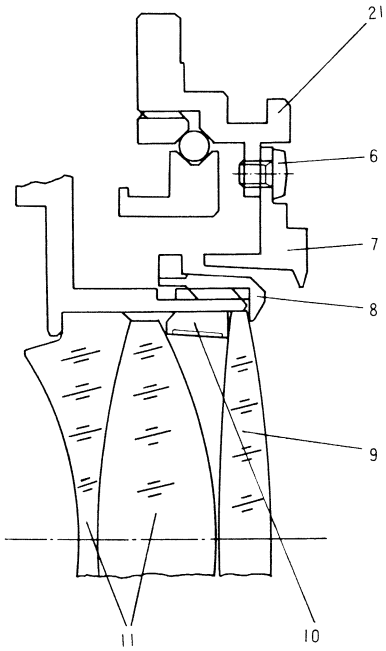 Fig-18	6-(T·B)-21	

HEXANON AR

f=50mm 1:1.4 (Automatic)

HEXANON AR

MODEL No. 3531

f=50mm 1:1.4 (Automtic)

1	2	3	4	5
Fig. No.	Parts No. or Sub-assembly	部品・部組名称	Parts name or Sub-assembly name	Note
A-1	501	レンズキャップ部組	Lens cap sub-assembly	〔S640〕
	✕07501	レンズキャップ	Lens cap	
	✕07502	キャップバネ	Lens cap spring	
	✕07503	ネームプレート	Name plate	
A-2	07951	彫刻リング	Engraved ring	〔L〕-07311
A-3	07219	フォーカス光皮	Leather (focus ring)	
A-4	63275	1.4φ×1.8 皿小ネジ	1.4φ×1.8 Counter sunk screw	〔S640〕-07311
A-5	07311	前　筒	Front tube	
A-6	07404	締付けリング	Set ring	Special tool
A-7	07151	中　胴	Inside tube	
A-8	701	前群レンズ部組	Front lens sub-assembly	Special tool
	✕07901	第1レンズ	No. 1 lens	
	✕07902	第2レンズ	No. 2 lens	
	✕07903	第3レンズ	No. 3 lens	
	✕07952	前鏡枠	Front lens barrel	
	✕07953	一番玉押え枠	Set ring for No. 1 lens	
	✕07954	間隔リング	Spacer ring	
A-9	702	後群レンズ部組	Rear lens sub-assembly	Special tool
	✕07904	第4レンズ	No. 4 lens	
	✕07905	第5レンズ	No. 5 lens	
	✕07906	第6レンズ	No. 6 lens	
	✕07907	第7レンズ	No. 7 lens	
	✕07961	中鏡枠	Middle lens barrel	
	✕07981	後鏡枠	Rear lens barrel	
	✕07982	6番玉押え	Set ring for No. 6 lens	Special tool
	✕07983	後玉押え枠	Set ring for rear lens	
A-10	15250	1.4φ×1.4 薄平小ネジ	1.4φ×1.4 Thin flat screw	〔S640〕-07153
A-11	07168	溝カム	Grooved cam	Ⓜ-07108
A-12	07108	ベルクランクローラー	Bell crank roller	Ⓜ-07107
A-13	16285	1.4φ×1.4 剣先止めネジ	1.4φ×1.4 Round head screw	〔S640〕-07151
A-14	07156	ボール押え A	Set ring A for ball	〔S640〕-07151 Special tool
A-15	51169	1.6φ 鋼球	1.6φ Steel ball	
A-16	07161	接続ネジ	Connection set screw	〔S640〕-07151

HEXANON AR

MODEL No. 3531

f=50mm 1:1.4 (Automatic)

1	2	3	4	5
Fig. No.	Parts No. or Sub-assembly	部品・部組名称	Parts name or Sub-assembly name	Note
A-17	07218	フォーカスカバー	Focus ring cover	〔L〕-07237
A-18	07209	フォーカスリング止めネジ	Set screw for focus ring	〔S640〕-07237
A-19	07237	フォーカスリング	Focus ring	
A-20	13143	1.2φ×1.6 皿小ネジ	1.2φ×1.6 Counter sunk screw	〔S640〕-07401
A-21	07403	化粧リング	Covered ring	
A-22	63459	1.7φ×3.5 皿小ネジ	1.7φ×3.0 Counter sunk screw	〔S640〕-07203
A-23	401	マウント部組	Lens mount sub-assembly	
	×07401	マウント	Lens mount	
	×07402	マウント制限ネジ	Lens mount limitation pin	
A-24	07451	t=0.03 フランジバック調整座金	t=0.03 Regulating washer for flange back	
	07452	t=0.05 フランジバック調整座金	t=0.05 Regulating washer for flange back	
	07453	t=0.06 フランジバック調整座金	t=0.06 Regulating washer for flange back	
	07454	t=0.08 フランジバック調整座金	t=0.08 Regulating washer for flange back	
	07455	t=0.10 フランジバック調整座金	t=0.10 Regulating washer for flange back	
A-25	07306	クリックバネ押え	Cap for click spring	〔S640〕-07311
A-26	07305	クリックバネ	Click spring	
A-27	51169	1.6φ 鋼球	1.6φ Steel ball	
A-28	07334	マニュアルストッパー止めネジ	Set screw for manual stopper	
A-29	07335	マニュアルストッパーバネ	Spring for manual stopper	
A-30	331	マニュアルストッパー部組	Manual stopper sub-assembly	
	×07331	マニュアルストッパー	Manual stopper	
	×07333	マニュアルストッパーバネ掛け	Spring stud for manual stopper	
A-31	07336	絞りリングストッパー	Diaphragm ring stopper	
A-32	07324	EEロックレバー軸	Set screw for EE lock lever	
A-33	07326	EEロックバネ	Spring for EE lock lever	

HEXANON AR

MODEL No. 3531

f=50mm 1:1.4 (Automatic)

1	2	3	4	5
Fig. No.	Parts No. or Sub-assembly	部品・部組名称	Parts name or Sub-assembly name	Note
A-34	323	EEロックレバー部組	EE lock lever sub-assembly	
	✕07323	EEロックレバー	EE lock lever	
	✕07325	EEロックバネ掛け	Spring stud for EE lock lever	
A-35	321	EEロック釦部組	EE lock button sub-assembly	
	✕07321	EEロック釦	EE lock button	
	✕07322	EEロック連動ピン	Connection pin for EE lock	
A-37	13280	1.4φ×2.0 皿小ネジ	1.4φ×2.0 Counter sunk screw	〔S640〕-07203
A-38	07304	クリック板 A	Click plate A	Ⓔ-51169
A-39	07303	クリック板 B	Click plate B	Ⓔ-51169
A-40	65425	1.7φ×2.5 薄平小ネジ	1.7φ×2.5 Thin flat screw	〔S640〕-07203
A-41	07204	直進案内板	Guide plate for helicoid	
	202	ヘリコイド部組	Helicoid sub-assembly	
A-(42)	✕07201	ヘリコイド雄	Helicoid male	
A-(43)	✕07202	ヘリコイド雌	Helicoid female	
A-(47)	✕07203	取付座	Outside tube	
A-(36)	✕07301	絞りリング	Diaphragm ring	Ⓜ-07203
A-44	07215	ボール押え B	Set ring B for ball	〔S640〕-07203 Special tool
A-45	51169	1.6φ 鋼球	1.6φ Steel ball	
A-46	07214	リテナー B	Retainer B	
A-48	101	羽根ケース部組	Blade case sub-assembly	
	✕07101	羽根ケース	Blade case	
	✕07102	駆動リング	Turning ring	
	✕07103	駆動ピン A	Turning pin A	
	✕07104	駆動ピン B	Turning pin B	
	✕07105	リング押え板	Set plate for turning ring	
	✕07106	ベルクランク	Bell crank	
	✕07107	ベルクランクピン	Bell crank pin	
	✕07109	ベルクランク軸	Rotation shaft for bell crank	
	✕07110	ベルクランクバネ	Spring for bell crank	
	✕07113	小座金	Washer	
	✕07114	羽根押え板	Blade cover	
	✕07116	バネ用柱	Spring stud screw	
	61295	1.4φ×1.8 平小ネジ	1.4φ×2.2 Flat screw	
	61275	1.4φ×2.2 平小ネジ	1.4φ×1.8 Flat screw	

HEXANON AR

MODEL No. 3531

f=50mm 1:1.4 (Autoritic)

1	2	3	4	5
Fig. No.	Parts No. or Sub-assembly	部品・部組名称	Parts name or Sub-assembly name	Note
	109	絞り羽根部組	Diaphragm blade sub-assembly	
	×07111	絞り羽根	Diaphragm blade	
	×07112	羽根ダボ	Blade stud	
A-49	07159	作動バネ	Main spring	
A-50	07163	リング制限板押え	Set screw for stopper plate	
A-51	07162	作動バネ柱 B	Screw B for main spring	
A-52	07157	リング制限板	Stopper plate for ring	〔S640〕-07151
A-53	151	絞り作動リング部組	Working ring for blade	Ⓜ-07159
	×07153	絞り作動リング	Working ring for blade	Ⓜ-07159
	×07160	作動バネ柱	Screw for main spring	〔S640〕-07153
	×07161	接続ネジ	Connection set screw	
A-54	203	絞り接続リング部組	Connection ring for diaphragm sub-assembly	
	×07210	絞り接続リング	Connection ring for diaphragm	
	×07212	マニュアル制限板	Limitation plate	〔S640〕-07210
	07231	本体接続板 A	Connection plate A	To use one according to the diameter of iris. 絞り径の傾向をみて1種使用
	07232	本体接続板 B	Connection plate B	
	07233	本体接続板 C	Connection plate C	
	61275	1.4φ×1.8 平小ネジ	1.4φ×1.8 Flat screw	
	63285	1.4φ×2.0 皿小ネジ	1.4φ×2.0 Counter sunk screw	

HEXANON AR

f=50mm 1 : 1.4 (Automatic)

A

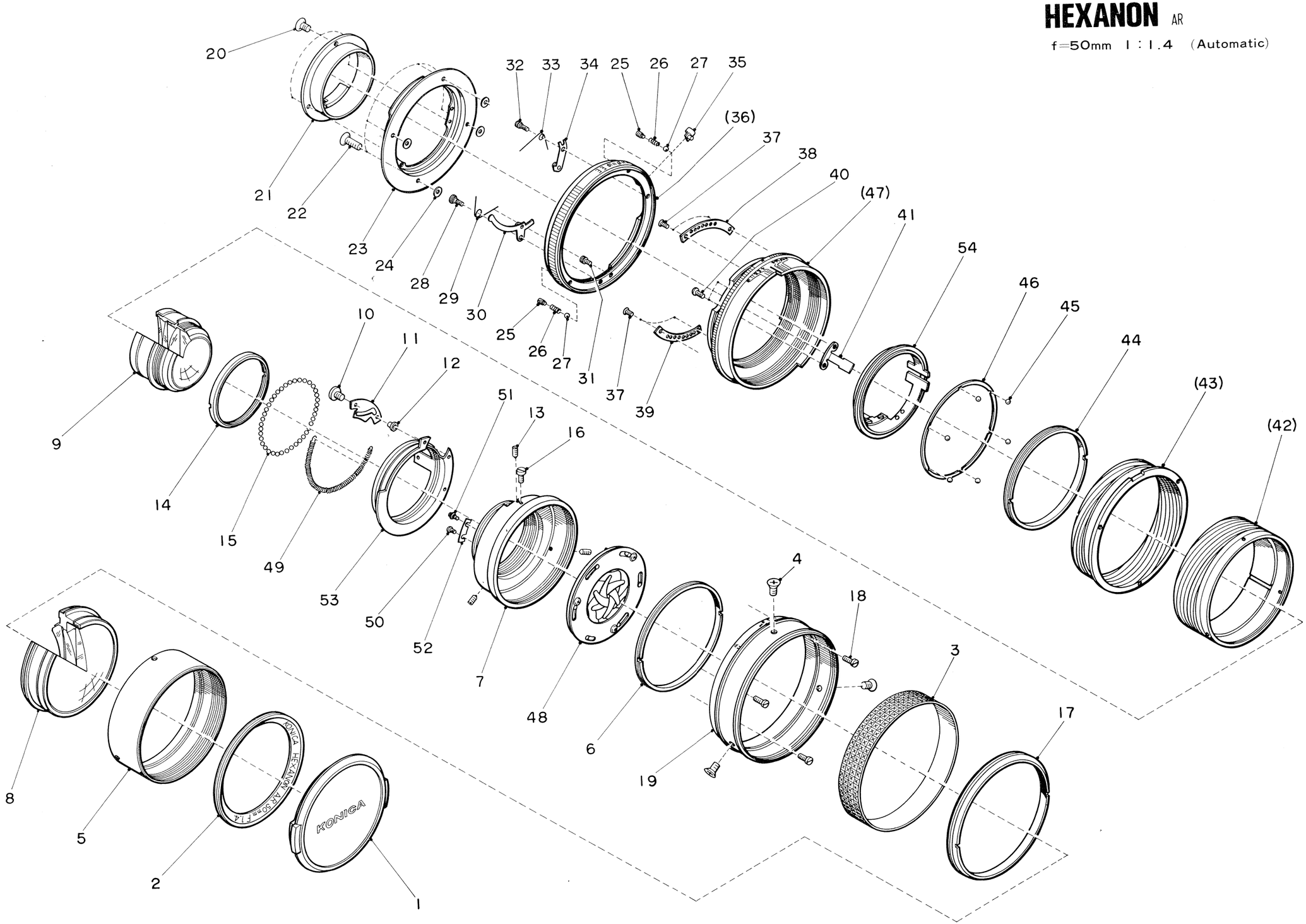

HEXANON AR

MODEL No. 3531

f=50mm 1:1.4 (Automatic)

1	2	3	4	5
Fig. No.	Parts No. or Sub-assembly	部品・部組名称	Parts name or Sub-assembly name	Note
	101	羽根ケース部組	Blade case sub-assembly	
B-1	61295	1.4φ×2.2 平小ネジ	1.4φ×2.2 Flat screw	
B-2	×07114	羽根押え板	Blade cover	
B-3	×07113	小座金	Washer	
B-4	109	絞り羽根部組	Diaphragm blade sub-assembly	
B-5	61275	1.4φ×1.8 平小ネジ	1.4φ×1.8 Flat screw	
B-6	×07116	バネ用柱	Spring stud screw	
B-7	×07105	リング押え板	Set plate for turning ring	
B-8	×07110	ベルクランクバネ	Bell crank spring	
B-9	×07102	駆動リング	Turning ring	
B-10	×07109	ベルクランク回転軸	Rotation shaft for bell crank	
B-11	×07106	ベルクランク	Bell crank	
B-12	×07101	羽根ケース	Blade case	
	151	絞り作動リング部組	Working ring for blade sub-assembly	
B-13	×07160	作動バネ柱 A	Stud A for main spring	〔S640〕-07153
B-14	×07161	接続ネジ B	Connection set screw B	〔S640〕-07153
B-15	×07153	絞り作動リング	Working ring for blade	
	203	絞り接続リング部組	Connection ring for diaphragm sub-assembly	
B-16	61275	1.4φ×1.8 平小ネジ	1.4φ×1.8 Flat screw	〔S640〕-07210
B-17	×07212	マニュアル制限板	Limitation plate	〔S640〕-07210
B-18	63285	1.4φ×2.0 皿小ネジ	1.4φ×2.0 Counter sunk screw	〔S640〕-07210
B-19	07231	本体接続板 A	Connection plate A	〔S640〕-07210
	07232	本体接続板 B	Connection plate B	〔S640〕-07210
	07233	本体接続板 C	Connection plate C	〔S640〕-07210
B-20	×07210	絞り接続リング	Connection ring for diaphragm	

HEXANON AR

B

f=50mm 1 : 1.4 (Automatic)

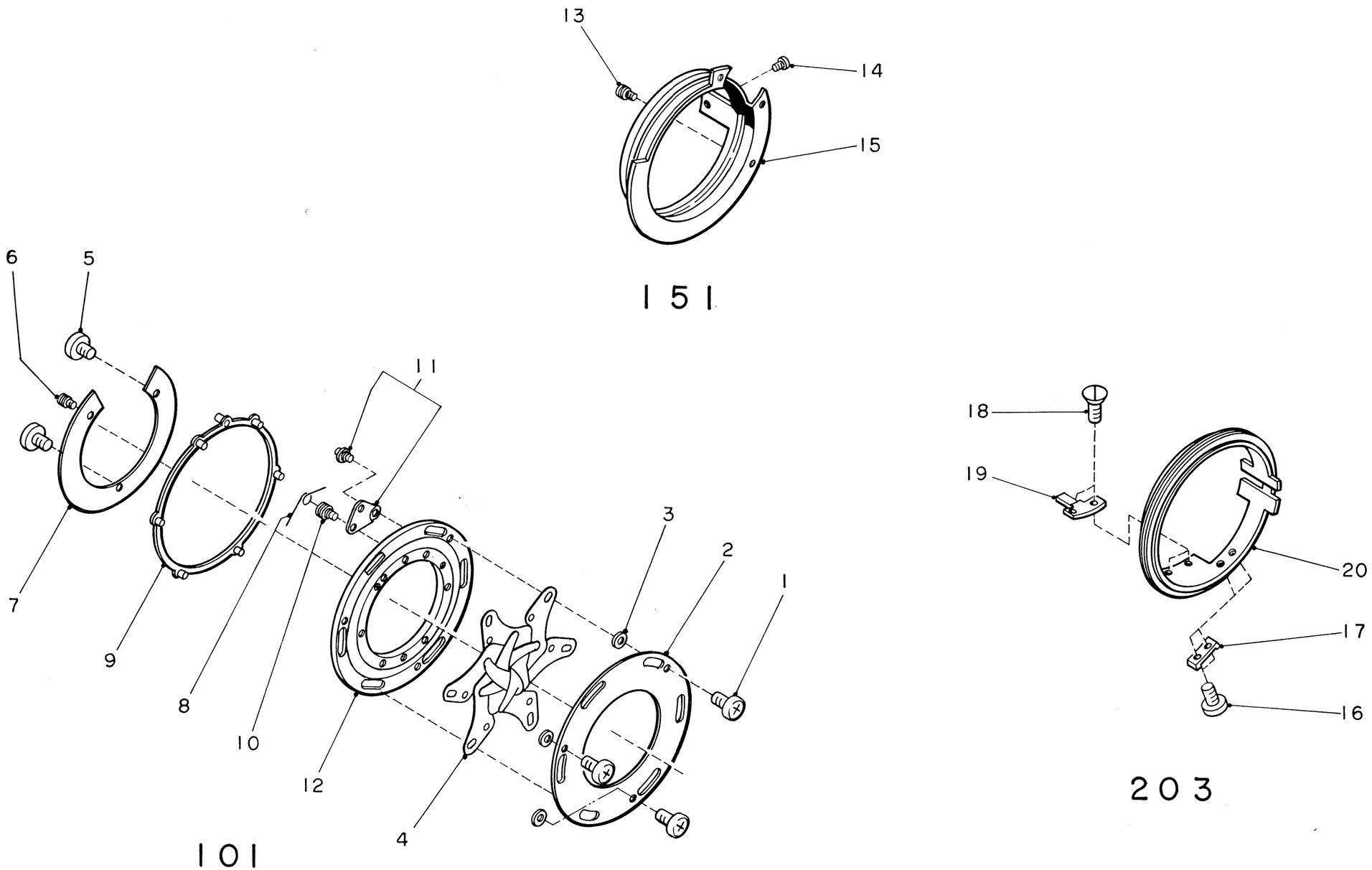

HEXANON AR

f=57mm 1:1.2 (Automatic)

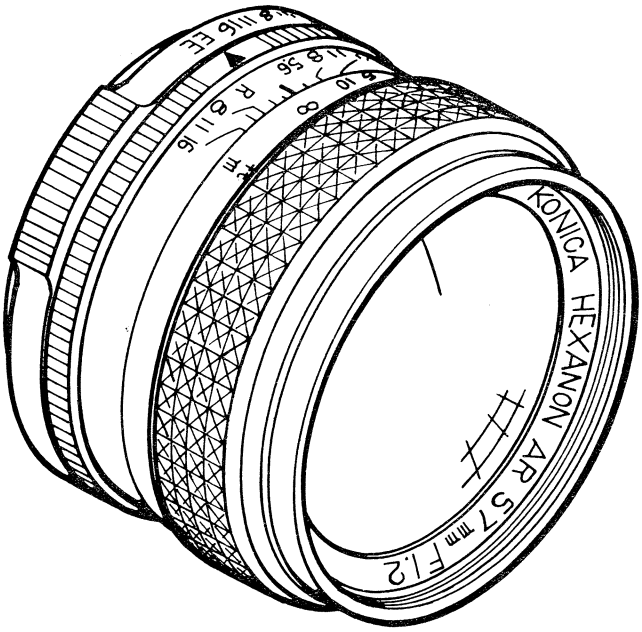

HEXANON AR

MODEL NO. 3530

f=57mm 1:1.2 (Automatic)

1	2	3	4	5
Fig. No.	Parts No. or Sub-assembly	部品・部組名称	Parts name or Sub-assembly name	Note
A-1	501	レンズキャップ部組	Lens cap sub-assembly	
	×07501	レンズキャップ	Lens cap	
	×07502	キャップバネ	Lens cap spring	
	×07503	ネームプレート	Name plate	
A-2	07951	彫刻リング	Engraved ring	
A-3	61285	1.4φ×2.0 平小ネジ	1.4φ×2.0 Flat screw	〔S640〕-07311
A-4	07311	前　筒	Front tube	
A-5	701	前群レンズ部組	Front lens sub-assembly	
	×07901	第1レンズ	No. 1 lens	
	×07902	第2レンズ	No. 2 lens	
	×07903	第3レンズ	No. 3 lens	
	×07952	前鏡枠	Front lens barrel	
	×07953	1番玉押え	Set ring for No. 1 lens	
	×07954	3番玉押え	Set ring for No. 3 lens	
A-6	07406	化粧リング止ネジ	Set screw for covered ring	〔S640〕-07401
A-7	403	化粧リング部組	Covered ring sub-assembly	
	×07403	化粧リング	Covered ring	
	×07404	F値ピン	F value pin	
A-8	702	後群レンズ部組	Rear lens sub-assembly	
	×07904	第4レンズ	No. 4 lens	
	×07905	第5レンズ	No. 5 lens	
	×07906	第6レンズ	No. 6 lens	
	×07907	第7レンズ	No. 7 lens	
	×07981	後鏡枠	Rear lens barrel	
	×07982	4番玉押え枠	Set ring for No. 4 lens	
	×07983	中間リング A	Intermediate ring A	
	×07984	中間リング B	Intermediate ring B	
A-9	07218	フォーカスカバー	Focus ring cover	〔S640〕-07217
A-10	07219	フォーカス光皮	Leather (Focus ring)	
A-11	07209	フォーカスリング止ネジ	Set screw for focus ring	〔S640〕-7217
A-12	07217	フォーカスリング	Focus ring	
A-13	07206	ヘリコイド止ネジ	Set screw for helicoid	〔S640〕-07201

HEXANON AR

MODEL No. 3530

f=57mm 1:1.2 (Automatic)

1	2	3	4	5
Fig. No.	Parts No. or Sub-assembly	部品・部組名称	Parts name or Sub-assembly name	Note
	202	ヘリコイド部組	Helicoid sub-assembly	
(A-14)	×07201	ヘリコイド雄	Helicoid male	
(A-15)	×07202	ヘリコイド雌	Helicoid female	
(A-54)	×07203	取付座	Outside tube	
A-16	16405	1.7φ×2.0剣先止ネジ	1.7φ×2.0 Round head screw	〔S640〕-07151
	152	中胴部組	Inside tube sub-assembly	
(A-17)	×07152	中胴 B	Inside tube B	
(A-20)	×07151	中胴 A	Inside tube A	
A-18	16405	1.7φ×2.0剣先止ネジ	1.7φ×2.0 Round head screw	〔S640〕-07151
A-19	101	羽根ケース部組	Blade case sub-assembly	
	×07101	羽根ケース	Blade case	
	×07102	駆動リング	Turning ring	
	×07103	駆動ピン A	Turning pin A	
	×07104	駆動ピン B	Turning pin B	
	×07105	リング押え板	Set plate for turning ring	
	×07106	ベルクランク	Bell crank	
	×07107	ベルクランクピン	Bell crank pin	
	×07109	ベルクランク回転軸	Rotation shaft for bell crank	
	×07110	ベルクランクバネ	Spring for bell crank	
	×07113	小座金	Washer	
	×07114	羽根押え板	Blade cover	
	×07116	バネ用柱	Spring stud screw	
	×61275	1.4φ×1.8 平小ネジ	1.4φ×1.8 Flat screw	
	×61295	1.4φ×2.2 平小ネジ	1.4φ×2.2 Flat screw	
	109	絞り羽根部組	Diaphragm blade sub-assembly	
	×07111	絞り羽根	Diaphragm blade	
	×07112	羽根ダボ	Diaphragm blade dowell	
A-21	61335	1.4φ×3.5 平小ネジ	1.4φ×3.5 Flat screw	〔S640〕-07151
A-22	07162	絞り作動リングストッパー押えネジ	Set screw of stopper for working ring	〔S640〕-07151
A-23	07157	絞り作動リングストッパー	Stopper for working ring	
A-24	07108	ベルクランクローラー	Bell crank rollor	Ⓜ-07157 Ⓜ-07158
A-25	61265	1.4φ×1.6 平小ネジ	1.4φ×1.6 Flat screw	〔S640〕-07153
A-26	07158	溝カム	Grooved cam	

HEXANON AR

MODEL No. 3530

f=57mm 1:1.2 (Automatic)

1	2	3	4	5
Fig. No.	Parts No. or Sub-assembly	部品・部組名称	Parts name or Sub-assembly name	Note
A-27	151	作動リング部組	Working ring sub-assembly	
	✕07153	絞り作動リング	Working ring for blade	
	✕07160	作動バネ柱	Screw for main spring	〔S640〕-07153
	✕07161	接続ネジ	Connection set screw	〔S640〕-07153
A-28	07159	作動バネ	Main spring	Ⓜ-17153
A-29	07156	ボール押え A	Set ring A for ball	
A-30	51169	1.6φ 鋼球	1.6φ Steel ball	
A-31	63459	1.7φ×3.5 皿小ネジ	1.7φ×3.5 Counter sunk screw	〔S640〕-07203
A-32	401	マウント部組	Lens mount sub-assembly	
	✕07401	マウント	Lens mount	
	✕07402	マウント制限ピン	Lens mount limition pin	
A-33	15270	1.4φ×1.8 薄平小ネジ	1.4φ×1.8 Thin flat screw	
A-34	07308	マニュアルストッパー	Manual stopper	
A-35	07306	クリックバネ押え	Cap for click spring	
A-36	07305	クリックバネ	Click spring	
A-37	51209	2.0φ 鋼球	2.0φ Steel ball	
A-38	07451	t=0.03 フランジバック調整座金	Regulating washer for flange back	(t=0.03)
	07452	t=0.05 フランジバック調整座金	Regulating washer for flange back	(t=0.05)
	07453	t=0.06 フランジバック調整座金	Regulating washer for flange back	(t=0.06)
	07454	t=0.08 フランジバック調整座金	Regulating washer for flange back	(t=0.08)
	07455	t=0.10 フランジバック調整座金	Regulating washer for flange back	(t=0.10)
A-39	07301	絞りリング	Diaphragm ring	Ⓜ-07203
A-40	07324	EEロックレバー軸	Set screw for EE lock lever	
A-41	07326	EEロックバネ	Spring for EE lock	
A-42	323	EEロックレバー部組	EE lock lever sub-assembly	
	✕07323	EEロックレバー	EE lock lever	
	✕07325	EEロックレバーバネ掛	Spring stud for EE lock lever	
A-43	321	EEロック釦部組	EE lock button sub-assembly	
	✕07321	EEロック釦	EE lock button	
	✕07322	EEロック連動ピン	Connection pin for EE lock	

HEXANON AR

MODEL No. 3530

f=57mm 1:1.2 (Automatic)

1	2	3	4	5
Fig. No.	Parts No. or Sub-assembly	部品・部組名称	Parts name or Sub-assembly name	Note
A-44	07215	ボール押え B	Set ring B for ball	〔S640〕-07203
A-45	51169	1.6φ 鋼球	1.6φ Steel ball	
A-46	07214	リテナー	Retainer	
A-47	13270	1.4φ×1.8 皿小ネジ	1.4φ×1.8 Counter sunk screw	
A-48	07302	絞りリングストッパー	Stopper for diaphragm ring	
A-49	07304	クリック板 B	Click plate B	
A-50	07327	EEロック釦安定板	Stable plate for EE lock button	
A-51	07303	クリック板 A	Click plate A	
A-52	11440	1.7φ×3.0 平小ネジ	1.7φ×3.0 Flat screw	〔S640〕-07204
A-53	07204	直進案内板	Guide plate for helicoid	
A-55	203	接続リング部組	Connection ring for diaphragm sub-assembly	
	×07210	接続リング	Connection ring for diaphragm	
	07231	本体接続板 a	Connection plate a	To use one according to the diameter of iris. 絞り径の傾向をみて1種使用
	07232	本体接続板 b	Connection plate b	
	13293	1.4φ×2.2 皿小ネジ	1.4φ×2.2 Counter sunk screw	〔S640〕-07210

HEXANON AR

f=57mm 1:1.2 (Automatic)

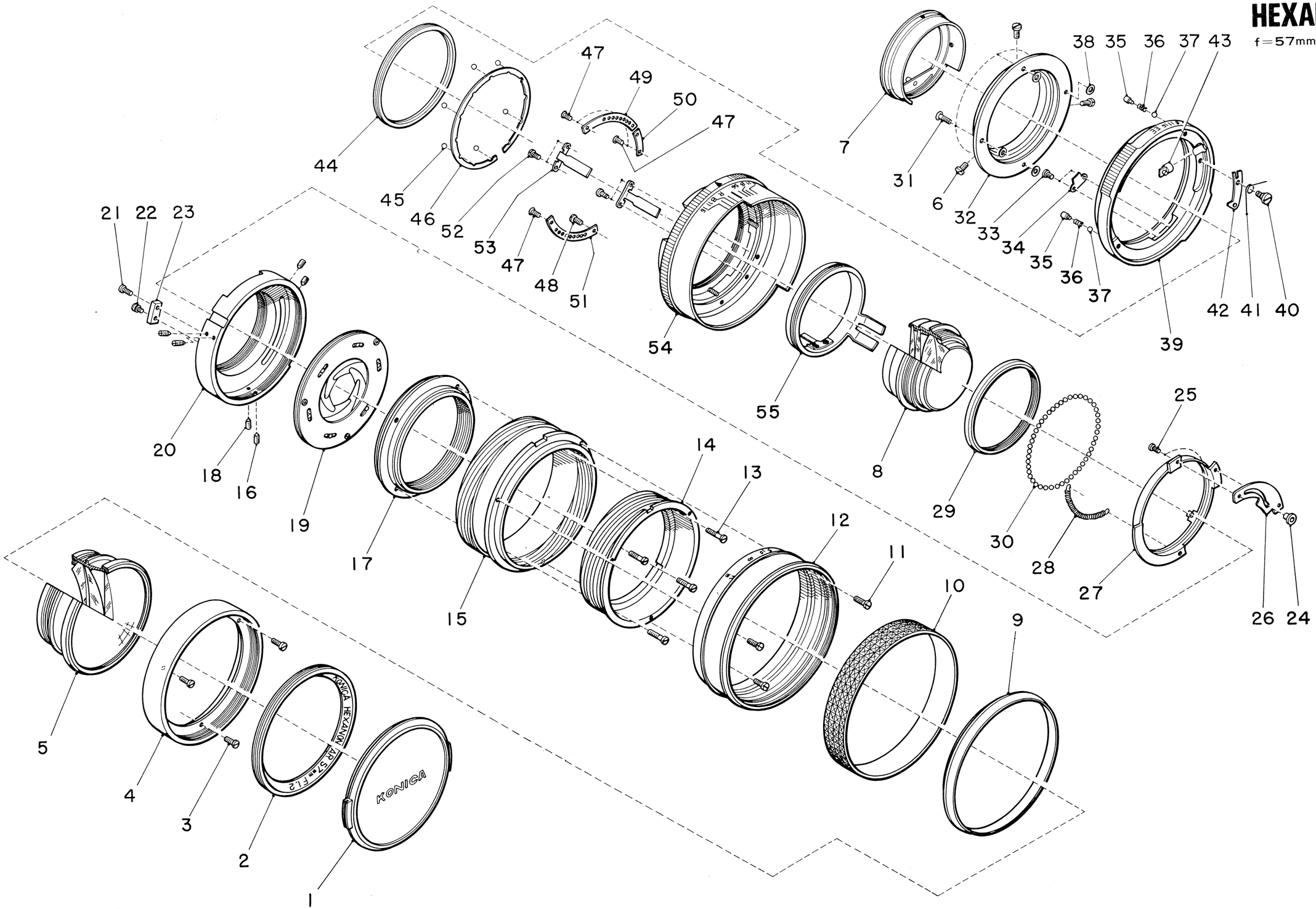

HEXANON AR

MODEL No. 3530

f=57mm 1:1.2 (Automatic)

1	2	3	4	5
Fig. No.	Parts No. or Sub-assembly	部品・部組名称	Parts name or Sub-assembly name	Note
	101			
B-1	61295	1.4φ×2.2 平小ネジ	1.4φ×2.2 Flat screw	
B-2	×07114	羽根押え板	Blade cover	
B-3	×07113	小座金	Washer	
B 4	109	絞り羽根部組	Diaphragm blade sub-assembly	
B-5	×07101	羽根ケース	Blade case	
B-6	×07116	バネ用柱	Spring stud screw	
B-7	×07106	ベルクランク	Bell crank	
B-8	×07109	ベルクランク回転軸	Rotation shaft for bell crank	
B-9	×07110	ベルクランクバネ	Spring for bell crank	
B-10	×07102	駆動リング	Turning ring	
B-11	×07105	リング押え板	Set plate for turning ring	
B-12	61275	1.4φ×1.8 平小ネジ	1.4φ×1.8 Flat screw	
	151	作動リング部組	Working ring sub-assembly	
B-13	×07153	絞り作動リング	Working ring for blade	
B-14	×07160	作動バネ柱	Screw for main spring	〔S640〕-07153
B-15	×07161	接続ネジ	Connection set screw	〔S640〕-07153
	203	接続リング部組	Connection ring sub-assembly	
B-16	×07210	絞り接続リング	Connection ring for diaphragm	
B-17	07231	本体接続板 a	Connection plate a	〔S640〕-07210
B-18	07232	本体接続板 b	Connection plate b	〔S640〕-07210
B-19	13293	1.4φ×2.2 皿小ネジ	1.4φ×2.2 Counter sunk screw	〔S640〕-07210

HEXANON AR

f=57mm 1:1.2 (Automatic)

B

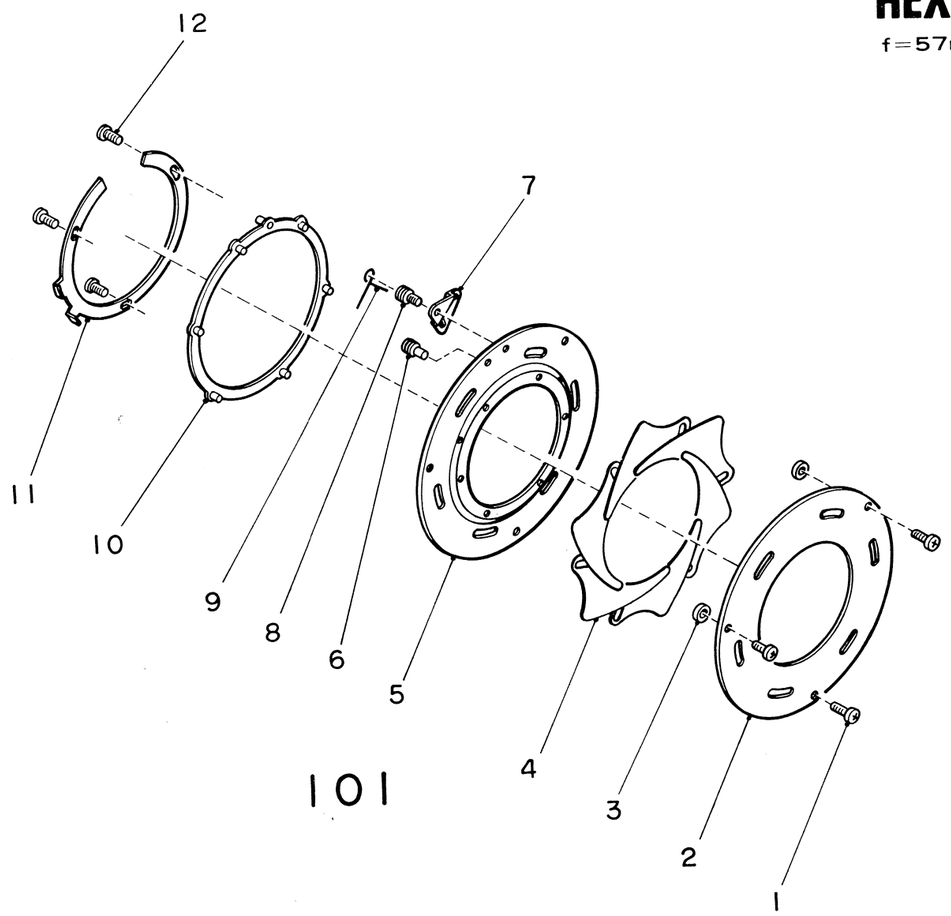

101

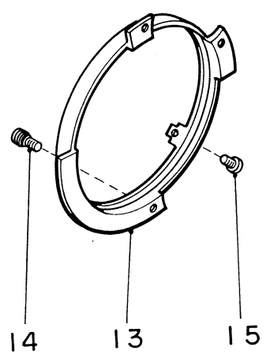

151

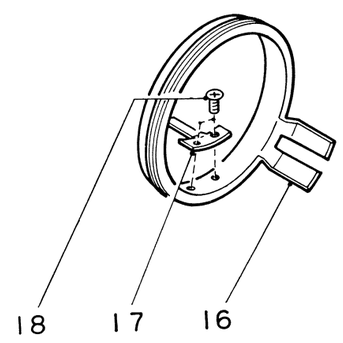

203

HEXANON AR

f=135mm 1:2.5 (Automatic)

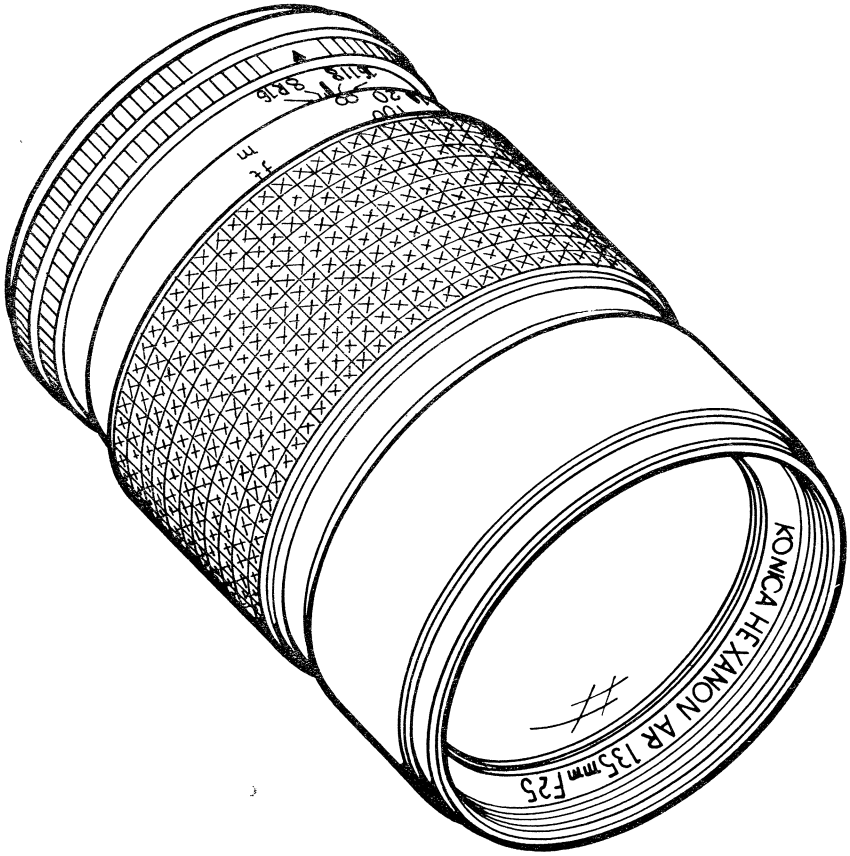

HEXANON AR

MODEL No. 3588

f=135mm 1:2.5 (Automatic)

1	2	3	4	5
Fig. No.	Parts No. or Sub-assembly	部品・部組名称	Parts name or Sub-assembly name	Note
A-1	501	レンズキャップ部組	Lens cap sub-assembly	
	✕07501	レンズキャップ	Lens cap	
	✕07502	キャップバネ	Cap spring	
	✕07503	ネームプレート	Name plate	
A-2	07511	マウントキャップ	Mount cap	
A-3	16425	1.7φ×2.5 剣先止めネジ	1.7φ×2.5 Round head screw	〔S640〕-07311
A-4	07314	セットビス	Set screw	〔S640〕-07311
A-5	07312	フィルター枠	Ring for filter	
A-6	531	フード部組	Hood sub-assembly	〔S640〕-07311
	✕07531	フード	Lens hood	
	✕07532	フード用ビロード	Cloth ling to lens hood	
A-7	07311	前　筒	Front tube	
A-8	701	前群レンズ部組	Front lens sub-assembly	
	✕07901	第1レンズ	No. 1 lens	
	✕07902	第2レンズ	No. 2 lens	
	✕07903	第3レンズ	No. 3 lens	
	✕07952	前鏡枠	Front lens barrel	
	✕07953	一番玉押えリング	Set ring for No. 1 lens	
	✕07954	三番玉押えリング	Set ring for No. 3 lens	
A-9	13133	1.2φ×1.4 皿小ネジ	1.2φ×1.4 Counter sunk screw	〔S640〕-07311
A-10	07406	化粧板	Covered plate	〔S640〕-07406
A-11	13143	1.2φ×1.6 皿小ネジ	1.2φ×1.6 Counter sunk screw	〔S640〕-07311
A-12	07403	反射防止リング	Unreflecting ring	
A-13	702	後群レンズ部組	Rear lens sub-assembly	
	✕07904	第4レンズ	No. 4 lens	
	✕07981	後鏡枠	Rear lens barrel	
	✕07982	後玉押えリング	Set ring for rear lens	
A-14	07404	締付リング	Set ring	Special tool
A-15	07151	中　胴	Inside tube	
A-16	07117	羽根ケース止めビス	Set screw for blade case	

HEXANON AR

MODEL No. 3588

f=135mm 1:2.5 (Automatic)

1	2	3	4	5
Fig. No.	Parts No. or Sub-assembly	部品・部組名称	Parts name or Sub-assembly name	Note
A-17	101	羽根ケース部組	Blade case sub-assembly	
	×07101	羽根ケース	Blade case	
	×07102	駆動リング	Turning ring	Ⓜ07102-07106
	×07103	駆動ピン A	Turning pin A	
	×07104	駆動ピン	Turning pin B	
	×07105	リング押え板	Set plate for turning ring	
	×07106	ベルクランク	Bell crank	
	×07107	ベルクランクピン	Bell crank pin.	
	×07109	ベルクランク回転軸	Rotation shaft for bell crank	
	×07110	ベルクランクバネ	Bell crank spring	
	109	絞り羽根部組	Diaphragm blade sub-assembly	
	×07111	絞り羽根	Diaphragm blade	
	×07112	羽根ダボ	Diaphragm blade dowel	
	×07113	小座金	Washer	
	×07114	羽根押え板	Blade cover	
	×07116	バネ用柱	Spring stud screw	
	61305	1.4φ×2.5 平小ネジ	1.4φ×2.5 Flat screw	
	61275	1.4φ×1.8 平小ネジ	1.4φ×1.8 Flat screw	
A-18	07108	ベルクランクローラ	Bell crank roller	Ⓜ-07107
A-19	61275	1.4φ×1.8 平小ネジ	1.4φ×1.8 Flat screw	〔S640〕-07153
A-20	07158	溝カム	Grooved cam	Ⓜ-07108
A-21	07159	作動バネ	Main spring	
A-22	07162	作動バネ柱 B	Stud B for main spring	〔S640〕-07151
A-23	07165	リング制限板押え	Set screw for stopper plate	〔S640〕-07151
A-24	07157	リング制限板	Stopper plate for ring	〔S640〕-07151
A-25	07161	中胴基準ビス	Connection set screw	
A-26	07156	ボール押え枠 A	Set ring A for ball	〔S640〕-07153
A-27	51169	1.6φ 鋼球	1.6φ Steel ball	
A-28	151	絞り作動リング部組	Working ring for blade sub-assembly	
	×07153	絞り作動リング	Working ring for blade	
	×07155	作動リング接続板	Connection plate for working ring	
	×07160	作動バネ柱 A	Stud A for main spring	〔S640〕-07153
	×07216	絞り接続ネジ	Connection screw for diaphragm	〔S640〕-07155
	63425	1.7φ×2.5 皿小ネジ	1.7φ×2.5 Counter sunk screw	〔S640〕-07155
A-29	63459	1.7φ×3.5 皿小ネジ	1.7φ×3.5 Counter sunk screw	〔S640〕-07203

HEXANON AR

MODEL No. 3588

f=135mm 1:2.5 (Automatic)

1	2	3	4	5
Fig. No.	Parts No. or Sub-assembly	部品・部組名称	Parts name or Sub-assembly name	Note
A-30	401	マウント部組	Lens mount sub-assembly	
	✕07401	マウント	Lens mount	
	✕07402	マウント制限ピン	Lens mount limitation pin	
A-31	07306	クリックバネ押え	Cap for click spring	
A-32	07305	クリックバネ	Click spring	
A-33	51169	1.6φ 鋼球	1.6φ Steel ball	
A-34	07324	EEロックレバー軸	Set screw for EE lock lever	
A-35	07326	EEロックバネ	Spring for EE lock lever	
A-36	323	EEロックレバー部組	EE lock lever sub-assembly	
	✕07323	EEロックレバー	EE lock lever	
	✕07325	EEロックレバーバネ掛	Spring stud for EE lock lever	
A-37	321	EEロック釦部組	EE lock button sub-assembly	
	✕07321	EEロック釦	EE lock button	
	✕07322	EEロック連動ピン	Connection pin for EE lock	
A-38	65434	1.7φ×2.8 薄平小ネ	1.7φ×2.8 Thin flat screw	〔S640〕-07301
A-39	07308	マニュアルストッパー	Manual stopper	
A-41	13292	1.4φ×2.2 皿小ネジ	1.4φ×2.2 Counter sunk screw	〔S640〕-07203
A-42	07303	クリック板 B	Click plate B	Ⓔ-51169
A-43	07304	クリック板 A	Click plate A	Ⓔ-51169
A-44	65445	1.7φ×3.0 薄平小ネジ	1.7φ×3.0 Thin flat screw	〔S640〕-07204
A-45	07204	直進案内板	Guide plate for helicoid	
A-46	07219	フォーカス光皮	Focus leather	
A-47	16404	1.7φ×2.0 剣先止メネジ	1.7φ×2.0 Round head screw	〔S640〕-07217
A-48	63295	1.4φ×2.2 皿小ネジ	1.4φ×2.2 Counter sunk screw	〔S640〕-07217
A-49	07217	フォーカスリング	Focus ring	
	202	ヘリコイド部組	Helicoid sub-assembly	
(A-50)	✕07201	ヘリコイド雄	Helicoid male	Ⓖ07201-07204
(A-51)	✕07202	ヘリコイド雌	Helicoid female	Ⓖ07201,07202,07203
(A-57)	✕07203	取付座	Outside tube	
(A-40)	✕07301	絞りリング	Diaphragm ring	Ⓔ07203,07301

HEXANON AR

MODEL No. 3588

f=135mm 1:2.5 (Automatic)

1	2	3	4	5
Fig. No.	Parts No. or Sub-assembly	部品・部組名称	Parts name or Sub-assembly name	Note
A-52	07218	距離目盛リング	Focus scall ring	
A-53	07215	ボール押え枠 B	Set ring B for ball	〔S640〕-07203
A-54	51169	1.6φ 鋼球	1.6φ Steel ball	
A-55	07214	リテナー	Retainer	
A-56	203	絞り接続リング部組	Connection ring for diaphragm sub-assembly	
	×07210	絞り接続リング A	Connection ring A for diaphragm	㊐07210-07211
	×07211	絞り接続リング B	Connection ring B for diaphragm	
	×07212	絞り接続板	Connection plate for diaphragm	
	×07164	接続板押え板	Set plate of connection plate	
	×07220	接続リングビス A	Screw A for connection ring	〔S640〕-07210
	×07221	接続リングビス B	Screw B for connection ring	〔S640〕-07211
	×07222	接続リングバネ	Spring for connection ring	
	07231	本体接続板 A	Connection plate A	To use one according to the diameter of iris. 絞り径の傾向を見て1種使用
	07232	本体接続板 B	Connection plate B	
	07233	本体接続板 C	Connection plate C	
	63425	1.7φ×2.5 皿小ネジ	1.7φ×2.5 Counter sunk screw	〔S640〕-07212
	65255	1.4φ×1.4 薄平小ネジ	1.4φ×1.4 Thin flat screw	〔S640〕-07164
	63285	1.4φ×2.0 皿小ネジ	1.4φ×2.0 Counter sunk screw	〔S640〕-07231

HEXANON AR

f=135mm 1:2.5 (Automatic)

A

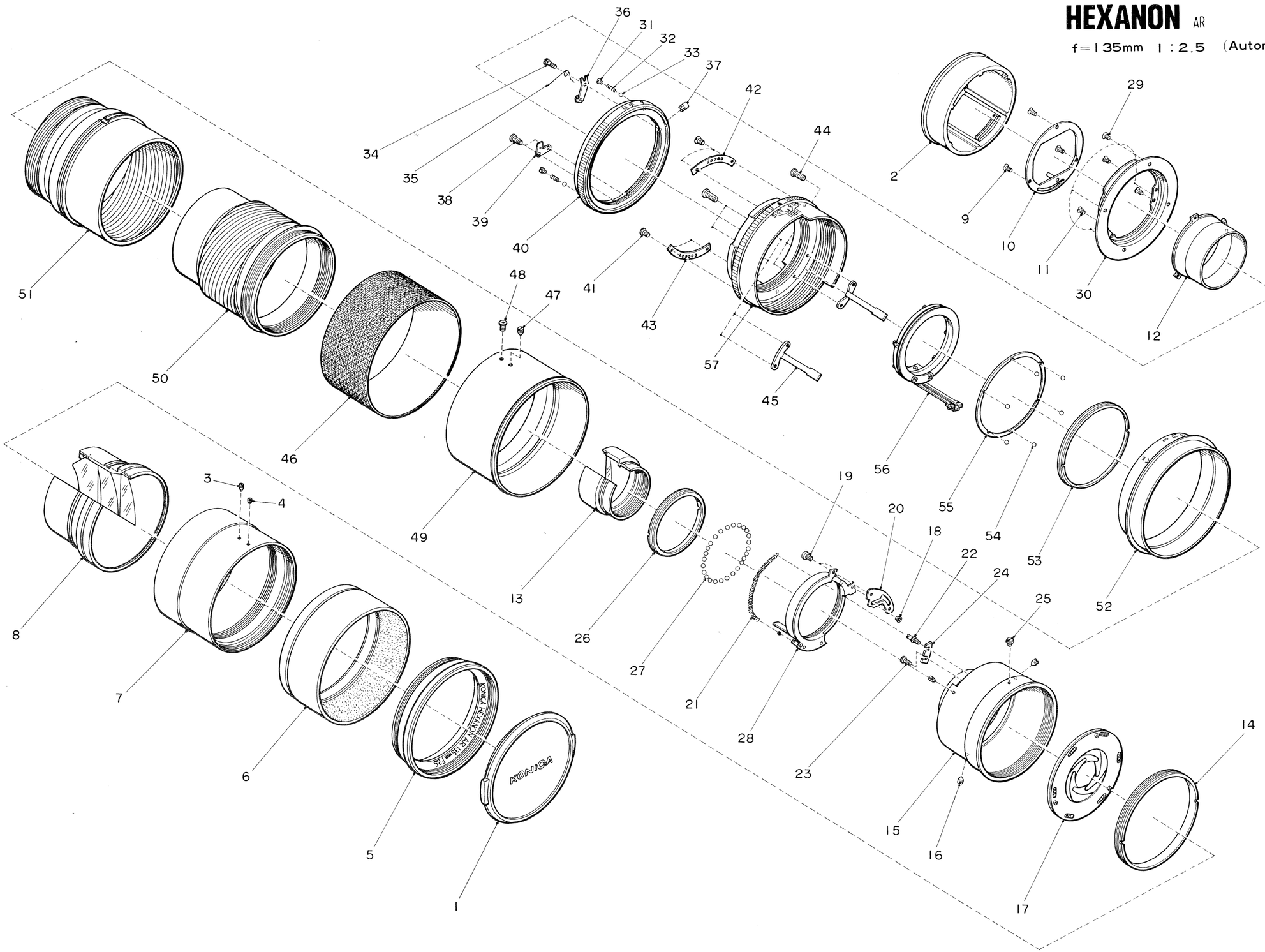

HEXANON AR

MODEL No. 3588

f=135mm 1:2.5 (Automatic)

1	2	3	4	5
Fig. No.	Parts No. or Sub-assembly	部品・部組名称	Parts name or Sub-assembly name	Note
	101	羽根ケース部組	Blade case sub-assembly	
B-1	61305	1.4φ×2.5 平小ネジ	1.4φ×2.5 Flat screw	〔S640〕-07101
B-2	×07114	羽根押え板	Blade cover	
B-3	×07113	小座金	Washer	
B-4	109	絞り羽根部組	Diaphragm blade sub-assembly	
B-5	×07116	バネ用柱	Spring stud screw	〔S640〕-07101
B-6	61275	1.4φ×1.8 平小ネジ	1.4φ×1.8 Flat screw	〔S640〕-07101
B-7	×07105	リング押え板	Set plate for turning ring	
B-8	×07110	ベルクランクバネ	Bell crank spring	
B-9	×07109	ベルクランク回転軸	Rotation shaft for bell crank	
B-10	×07106	ベルクランク	Bell crank	Ⓜ-07101
B-11	×07102	駆動リング	Turning ring	
B-12	×07101	羽根ケース	Blade case	
	151	絞り作動リング部組	Working ring for blade sub-assembly	
B-13	63425	1.7φ×2.5 皿小ネジ	1.7φ×2.5 Counter sunk screw	〔S640〕-07155
B-14	×07155	作動リング接続板	Connection plate for working ring	
B-15	×07216	絞り接続ネジ	Connection screw for diaphragm	〔S640〕-07155
B-16	×07160	作動バネ柱 A	Stud A for main spring	〔S640〕-07153
B-17	×07153	絞り作動リング	Working ring for blade	
	203	絞り接続リング部組	Connection ring for diaphragm sub-assembly	
B-18	63425	1.7φ×2.5 皿小ネジ	1.7φ×2.5 Counter sunk screw	〔S640〕-07212
B-19	×07212	絞り接続板	Connection plate for diaphragm	
B-20	65255	1.4φ×1.4 薄平小ネジ	1.4φ×1.4 Thin flat screw	〔S640〕-07164
B-21	×07164	接続板押え板	Set plate of connection plate	
B-22	63285	1.4φ×2.0 皿小ネジ	1.4φ×2.0 Counter sunk screw	〔S640〕-07231
B-23	07231	本体接続板 A	Connection plate A	
	07232	本体接続板 B	Conectio plate B.	
	07233	本体接続板 C	Connection plate C	
B-24	×07222	接続リングバネ	Spring for connection ring	
B-25	×07221	接続リングビス B	Screw B for connection ring	〔S640〕-07211
B-26	×07220	接続リングビス A	Screw A for connection ring	〔S640〕-07210
B-27	×07211	絞り接続リング B	Connection ring B for diaphragm	Ⓔ07210,07211
B-28	×07210	絞り接続リング A	Connection ring A for diaphragm	

HEXANON AR

f=135mm 1:2.5 (Automatic)

B

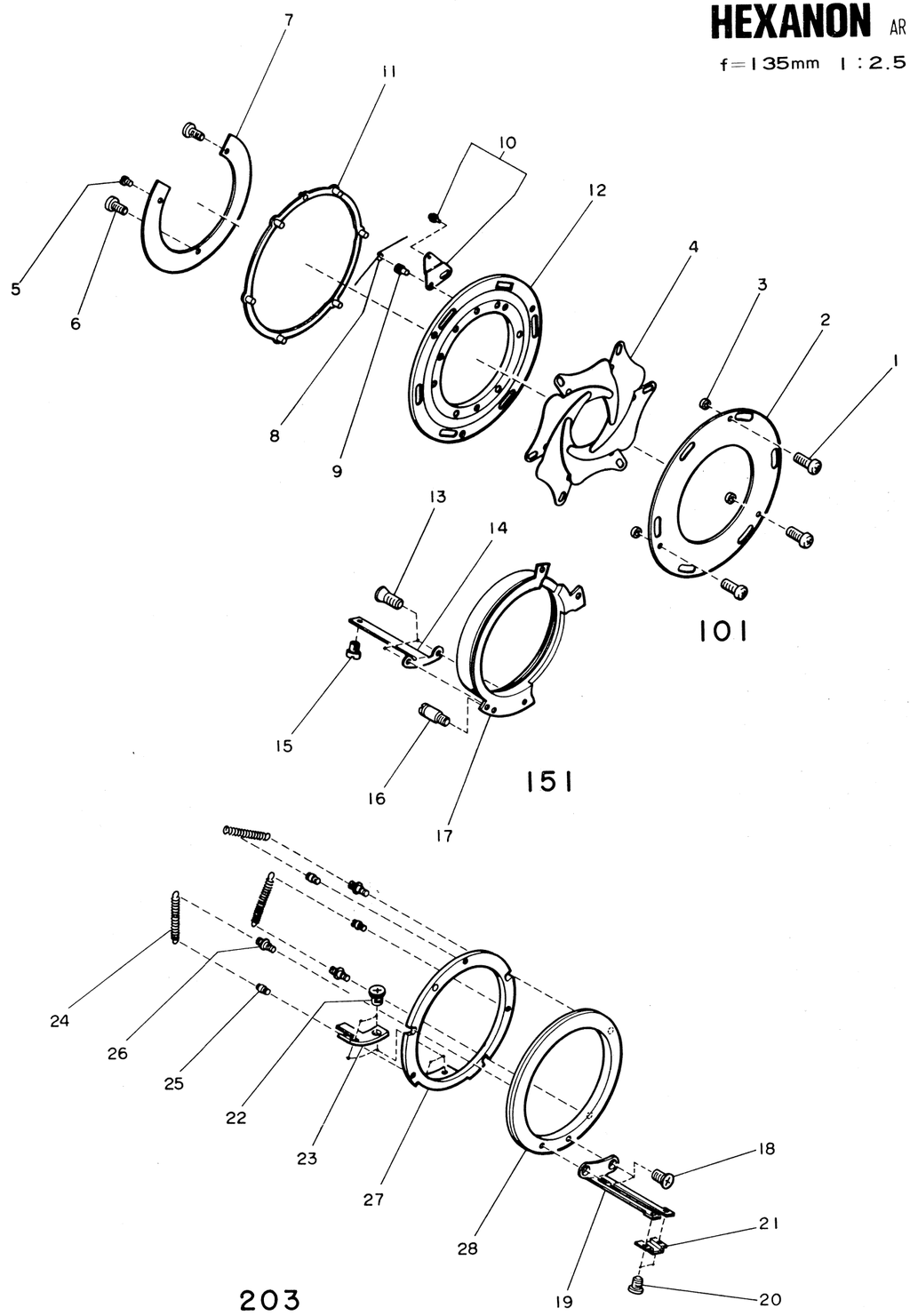

ZOOM HEXANON AR

35-70 mm F 3.5 (Automatic)

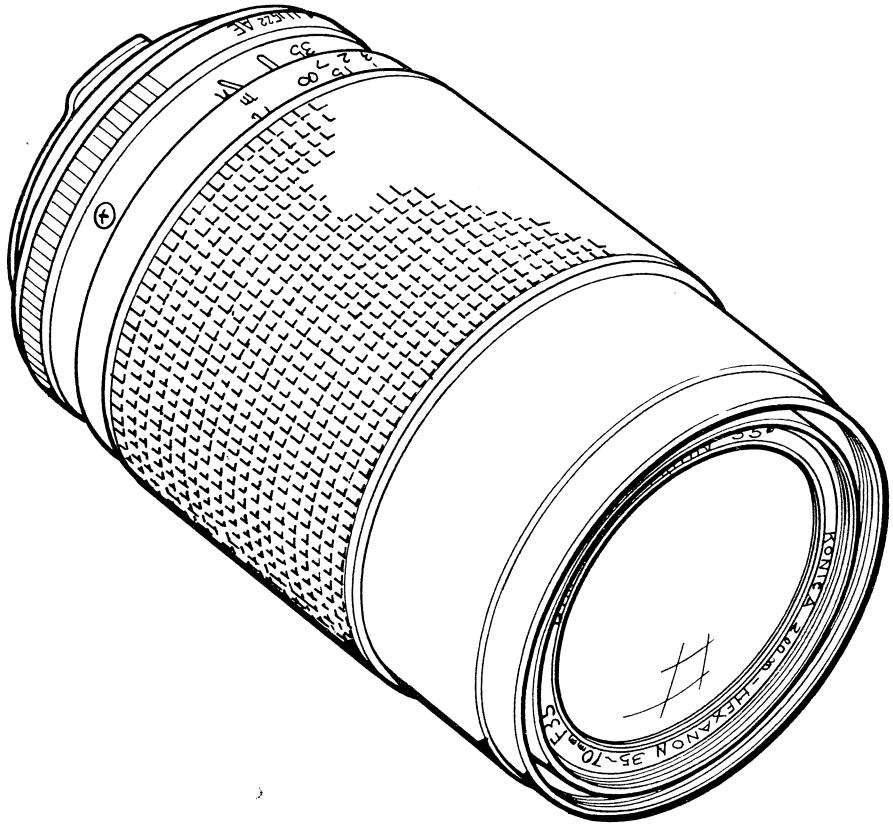

ZOOM HEXANON AR

35-70 mm F3.5 (Automatic)

MODEL No. 3578

1	2	3	4	5
Fig. No.	Parts No. or Sub-assembly	部品・部組名称	Parts name or Sub-assembly name	Note
A-1	501	レンズキャップ部組	Lens cap sub-assy	
	×07501	レンズキャップ	Lens cap	
	×07502	キャップバネ	Lens cap spring	
	×07503	銘 板	Name plate	
	×07504	補助スプリング	Auxiliary spring	
A-2	07951	彫刻リング	Engraved ring	
A-3	07953	1番玉押え	Set ring for No. 1 lens	〔S640〕-07952
A-4	07901	第1レンズ	No. 1 lens	
A-5	07954	1、2番玉間隔リング	Spacer ring for No. 2 lens	
A-6	07902	第2レンズ	No. 2 lens	
A-7	07903	第3レンズ	No. 3 lens	
A-8	07955	4番玉枠	No. 4 lens barrel	
A-9	07904	第4レンズ	No. 4 lens	
A-10	07956	4番玉押え	Set ring for No. 4 lens	〔S640〕-07255
A-11	07269	ズーム光皮	Zoom ring leather	
A-12	07270	ズームリング止めネジ	Set screw for zoom ring	〔S640〕-07267 07268
A-13	07267	ズームリング	Zoom ring	
A-14	07268	目盛リング	Scale ring	
A-15	07257	フォーカスカラー軸	Shaft focus ring collar	
A-16	07258	フォーカスカラー	Focus ring ring collar	
A-17	07266	フォーカスストッパー	Focus ring stopper	〔S640〕-07254
A-18	65284	1.4φ×2.0 ナベ小ネジ	1.4φ×2.0 Plus pan head screw	〔S640〕-07257
A-19	07959	座 金	Washer	
A-20	07311	前 筒	Front tube	
A-21	07254	フォーカス作動リング	Focus ring	
A-22	709	RC前群レンズ部組	RC Front lens sub-assy	
	×07992	5番玉押え	Set ring No. 5 lens	〔S640〕-07991
	×07905	第5レンズ	No. 5 lens	
	×07993	5、6番玉間隔リング	Spacer ring for No. 6 lens	

ZOOM HEXANON AR

35-70 mm F3.5 (Automatic) MODEL No. 3578

1	2	3	4	5
Fig. No.	Parts No. or Sub-assembly	部品・部組名称	Parts name or Sub-assembly name	Note
	×07906	第6レンズ	No. 6 lens	
	×07991	RC前枠	RC Front barrel	
	×07994	6、7番玉間隔リング	Spacer ring for No. 7 lens	
	×07907	第7レンズ	No. 7 lens	
A-23	07511	マウントキャップ	Lens mount cap	
A-24	07407	化粧リング止めネジ	Set screw for covered ring	〔S640〕-07401
A-25	07403	化粧リング	Covered ring	
A-26	708	RC後群レンズ部組	RC Rear lens sub-assy	
	×07908	第8レンズ	No. 8 lens	
	×07909	第9レンズ	No. 9 lens	
	×07996	RC後枠	RC Rear barrel	
	×07997	8、9番玉間隔リング	Spacer ring for No. 9 lens	
	×07998	後玉押え	Set ring for rear lens	〔S640〕-07996
A-27	07227	ピント調整座金t=0.03	Regulating washer t=0.03 for focus	
	07228	ピント調整座金t=0.05	Regulating washer t=0.05 for focus	
A-28	63489	1.7φ×5.0 皿小ネジ	1.7φ×5.0 Counter sunk screw	
A-29	401	マウント部組	Lens mount sub-assy	
	×07402	マウント制限ピン	Lens mount limitation pin	〔S640〕-07401
	×07401	マウント	Lens mount	
A-30	07301	絞りリング	Diaphragm ring	
A-31	51209	2φ鋼球	2.0φ Steel ball	Ⓖ-07301
A-32	07305	クリップバネ	Click spring	
A-33	07306	クリックバネ柱	Stud for click spring	
A-34	07322	AEロックレバー軸	Shaft for AE lock lever	
A-35	07326	AEロックレバーバネ	Spring for AE lock lever	
A-36	07321	AEロックレバー	AE lock lever	
A-37	65284	1.4φ×2.0 ナベ小ネジ	1.4φ×2.0 Plus pan head screw	〔S640〕-07164

ZOOM HEXANON AR

35-70 mm F3.5 (Automatic)

MODEL No. 3578

1	2	3	3	5
Fig. No.	Parts No. or Sub-assembly	部品・部組名称	Parts name or Sub-assembly name	Note
A-38	07164	作動バネ掛け	Plate for main spring	
A-39	07159	作動バネ	Main spring	
A-40	07161	作動バネ柱	Stud for main spring	〔S640〕-07210
A-41	07215	ボール押え枠	Set ring for steel ball	
A-42	51160	1.6φ ステンレス球	1.6φ Stainlees steel ball	
A-43	203	接続リング部組	Connection ring for diaphragm sub-assy	
	×07162	リング制限ビス	Stopper screw	
	61275	1.4φ×1.8 ナベ小ネジ	1.4φ×1.8 Plus pan head screw	
	×07212	接続レバー	Connection ring for diaphragm	
	61325	1.4φ×3.0 ナベ小ネジ	1.4φ×3.0 Plus pan head screw	
	×07231	本体接続板	Connection plate	
	×07210	接続リング	Connection ring for diaphragm	
A-44	07265	指標リング止めネジ	Set screw for point ring	
A-45	07264	指標リング	Point ring	
A-46	65505	1.7φ×6.0 ナベ小ネジ	1.7φ×6.0 Plus pan head screw	〔S640〕-07203
A-47	61465	1.7φ×4.0 小ネジ	1.7φ×4.0 Plus pan head screw	〔S640〕-07203
A-48	07203	取付座	Out side tube	
A-49	07221	ff調整座金 t=0.03	Regulating washer t=0.03 for f.f	
	07222	ff調整座金 t=0.05	Regulating washer t=0.05 for f.f	
	07223	ff調整座金 t=0.1	Regulating washer t=0.1 for f.f	
	07224	ff調整座金 t=0.2	Regulating washer t=0.2 for f.f	
	07225	ff調整座金 t=0.5	Regulating washer t=0.5 for f.f	
	07226	ff調整座金 t=0.3	Regulating washer t=0.3 for f.f	
A-50	07163	駆動リングバネ柱	Stud for turning ring spring	
A-51	07103	駆動リングバネ	Spring for turning ring	
A-52	61465	1.7φ×4.0 ナベ小ネジ	1.7φ×4.0 Plus pan head screw	〔S640〕-07991
A-53	65335	1.4φ×3.5 ナベ小ネジ	1.4φ×3.5 Plus pan head screw	〔S640〕-07995
A-54	07995	RC中枠	Secand barrel for rear lens	

ZOOM HEXANON AR

35-70 mm F3.5 (Automatic)

MODEL No. 3578

1	2	3	4	5
Fig. No	Parts No. or Sub-assembly	部品・部組名称	Parts name or Sub-assembly name	Note
A-55	1 0 1	羽根ケース部組	Blade case sub-assy	
	×07105	リング押え	Set ring for turning ring	
	×07102	駆動リング	Turning ring	
	1 0 9	絞り羽根部組	Diaphragm blade sub-assy	
	×07111	絞り羽根	Diaphragm blade	
	×07112	羽根ダボ	Diaphragm blade dowel	
	×07101	羽根ケース	Blade case	
A-56	2 5 1	ズーム部組	Zoom sub-assy	
	07260	カラー止めネジ	Set screw for zooming collar	
	07281	主胴カラー	Zooming collar	
	61445	1.7φ×3.0 ナベ小ネジ	1.7φ×3.0 Plus pan head screw	
	07285	直進カラー3.90φ	Guide collar for 3.90φ	
	07286	直進カラー3.91φ	Guide collar for 3.91φ	
	61405	1.7φ×2.0 ナベ小ネジ	1.7φ×2.0 Plus pan head screw	
	07280	回転胴カラー	Turning ring collar	
	×07253	ズーム作動リング	Working ring for zoom	Ⓖ-07252
	07408	カムカラー止めネジ	Set screw for collar B	
	07261	カムカラーB	Collar B	Ⓖ-07252
	61425	1.7φ×2.5 ナベ小ネジ	1.7φ×2.5 Plus pan head screw	
	07256	FC直進レバー	Guide plate for front lens barrel	Ⓖ-07251
	×07255	FC摺動枠	Working ring for front lens barrel	Ⓖ-07251 07952
	×07952	FC枠	Front lens barrel	Ⓖ-07255
	16265	1.4φ×1.6 剣先ネジ	1.4φ×1.6 Round head screw	
	×07957	前筒固定リング	Set ring for front tube	
	07408	カムカラー止めネジ	Set screw for collar B	
	07261	カムカラーB	Collar B	Ⓖ-07252
	×07252	ブーム回転胴	Turning ring for zoom	Ⓖ-07251 07253
	×07259	RC移動枠	RC working barrel	Ⓖ-07251
	07272	ズーム摩擦体	Frictional resistor for zoom	

ZOOM HEXANON AR

35-70 mm F3.5 (Automatic)

A

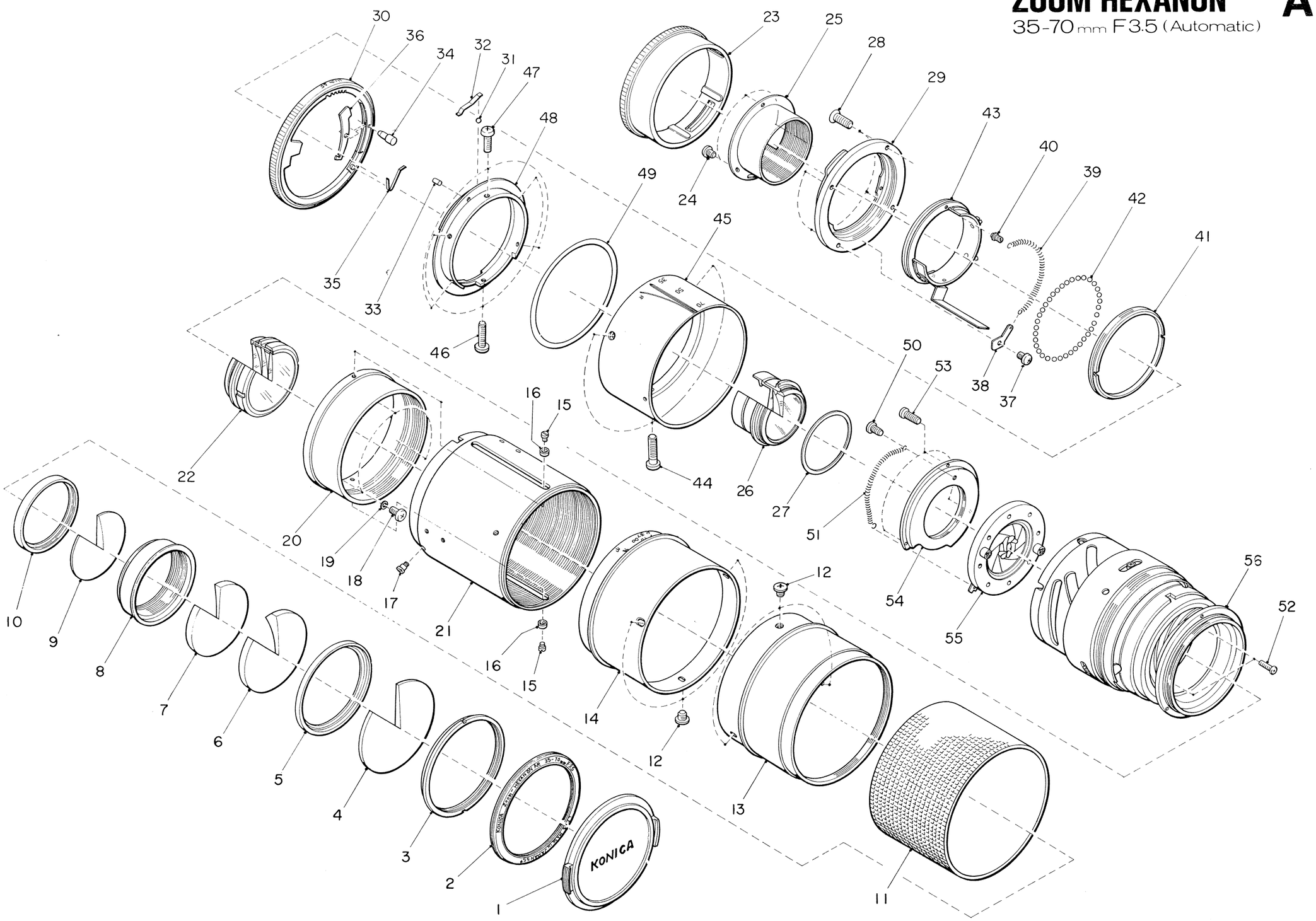

ZOOM HEXANON AR

35-70 mm F3.5 (Automatic)

MODEL No. 3578

1	2	3	4	5
Fig. No.	Parts No. or Sub-assembly	部品・部組名称	Parts name or Sub-assembly name	Note
	101	羽根ケース部組	Blade case sub-assy	
B-1	×07105	リング押え	Set ring for turning ring	
B-2	×07102	駆動リング	Turning ring	
B-3	109	絞り羽根部組	Diaphragm blade sub-assy	
	×07111	絞り羽根	Diaphragm blade	
	×07112	羽根ダボ	Diaphragm blade dowel	
B-4	×07106	羽根ケースカラー	Collar for blade case	
B-5	×07101	羽根ケース	Blade case	
	203	接続リング部組	Connection ring for diaphragm sub-assy	
B-6	×07162	リング制限ビス	Stopper screw	
B-7	61275	1.4φ×1.8 ナベ小ネジ	1.4φ×1.8 Plus pan head screw	
B-8	×07212	接続レバー	Connection ring for diaphragm	
B-9	61325	1.4φ×3.0 ナベ小ネジ	1.4φ×3.0 Plus pan head screw	
B-10	×07231	本体接続板	Connection plate	
B-11	×07210	接続リング	Connection ring for diaphragm	
	251	ズーム部組	Zoom sub-assy	
B-12	07260	カラー止めネジ	Set screw for zooming collar	
B-13	07281	主胴カラー	Zooming collar	
B-14	61445	1.7φ×3.0 ナベ小ネジ	1.7φ×3.0 Plus pan head screw	
B-15	07285	直進カラー3.90φ	Guide collar for 3.90φ	
	07286	直進カラー3.91φ	Guide collar for 3.91φ	
B-16	61405	1.7φ×2.0 ナベ小ネジ	1.7φ×2.0 Plus pan head screw	
B-17	07280	回転胴カラー	Turning ring collar	
B-18	×07253	ズーム作動リング	Working ring for zoom	Ⓖ-07252
B-19	07408	カムカラー止めネジ	Set screw for collar B	
B-20	07261	カムカラーB	Collar B	Ⓖ-07252
B-21	61425	1.7φ×2.5 ナベ小ネジ	1.7φ×2.5 Plus pan head screw	
B-22	07256	FC直進レバー	Guide plate for front lens barrel	Ⓖ-07251

ZOOM HEXANON AR

35-70 mm F3.5 (Automatic)

MODEL No. 3578

1	2	3	4	5
Fig. No.	Parts No. or Sub-assembly	部品・部組名称	Parts name or Sub-assembly name	Note
B-23	×07255	FC摺動枠	Working ring for front lens barrel	Ⓖ-07251 07952
B-24	×07952	FC枠	Front lens barrel	Ⓖ-07255
B-25	16265	1.4φ×1.6 剣先ネジ	1.4φ×1.6 Round head screw	
B-26	×07957	前筒固定リング	Set ring for front tube	
B-27	07408	カムカラー止めネジ	Set screw for collar B	
B-28	07261	カムカラーB	Collar B	Ⓖ-07252
B-29	×07252	ズーム回転胴	Turning ring for zoom	Ⓖ-07251 07253
B-30	×07259	RC移動枠	RC Working barrel	Ⓖ-07251
B-31	07272	ズーム摩擦体	Frictional resistor for zoom	
B-32	07273	摩擦体用バネ	Spring for frictional resistor	
B-33	×07251	ズーム主胴	Zooming tube	Ⓖ-07991, 07252 07255
	401	マウント部組	Lens mount sub-assy	
B-34	×07402	マウント制限ピン	Lens mount limitation pin	〔S640〕-07401
B-35	×07401	マウント	Lens mount	

ZOOM HEXANON AR

35-70 mm F3.5 (Automatic)

MODEL No. 3578

1	2	3	4	5
Fig. No.	Parts No. or Sub-assembly	部品・部組名称	Parts name or Sub-assembly name	Note
	07273	摩擦体用バネ	Spring for frictional resistor	
	×07251	ズーム主胴	Zooming tube	Ⓖ-07991, 07252 07255

ZOOM HEXANON AR

35-70 mm F3.5 (Automatic)

B

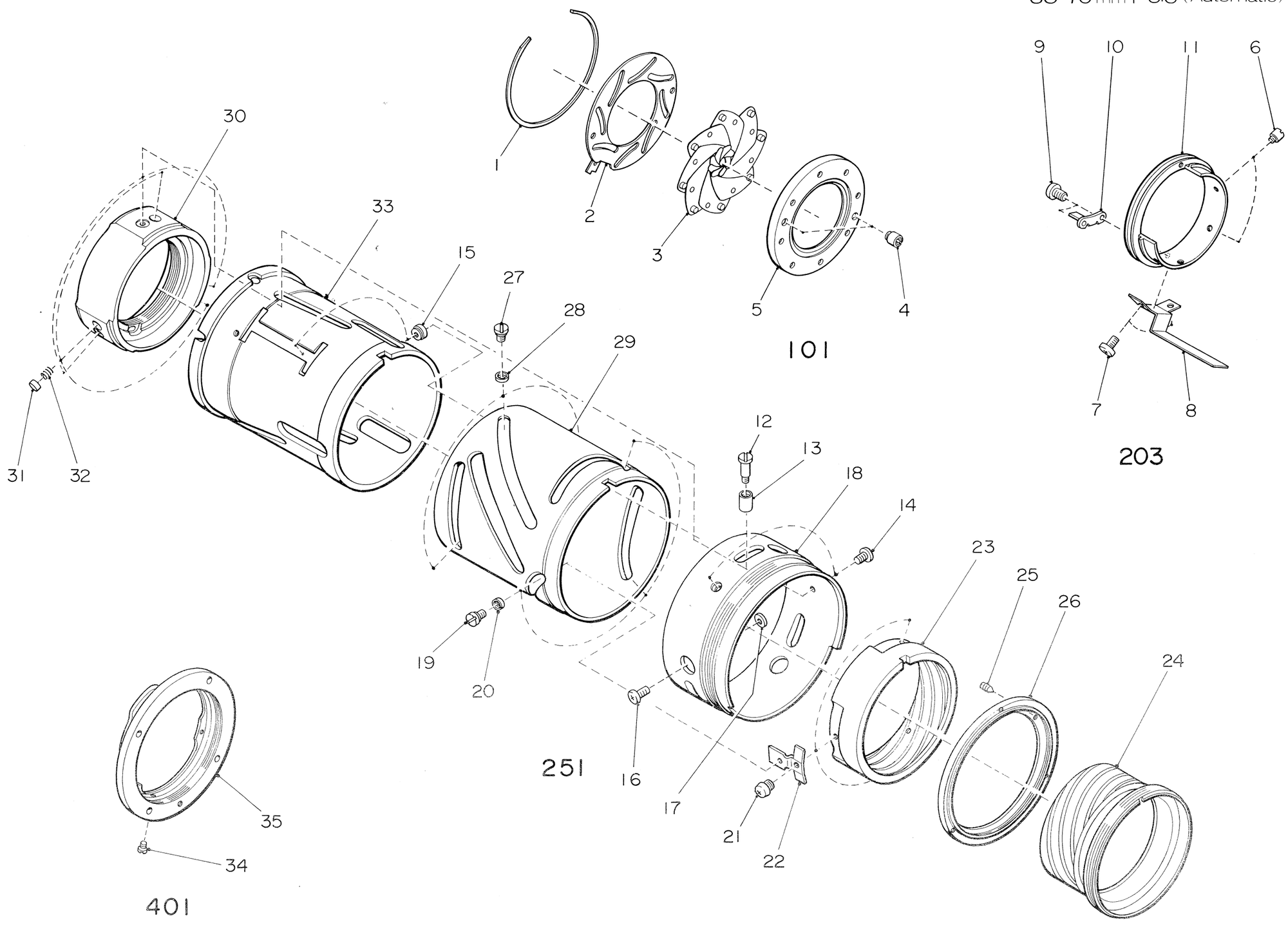

Seq.	Parts, Sub-Ass'y to be disassembled (Fig. No.)	Description	Solvent	Exclusive Tools
1	Engraved ring (A-2)	The engraved ring (A-2) is screwed into the filter screw of the front tube 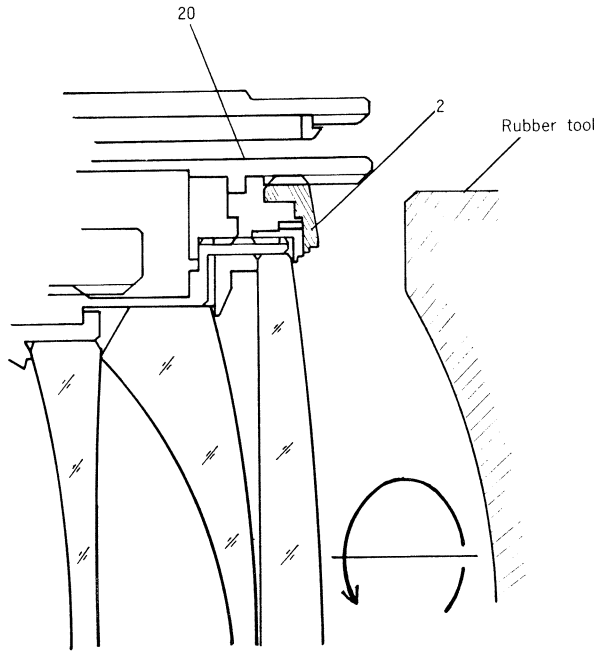		
2	Set ring for No.1 lens (A-3) No.1 lens (A-4) Spacer ring for No.2 lens (A-5) No.2 lens (A-6) No.3 lens (A-7) No.4 lens barrel (A-8) No.4 lens (A-9) Set ring for No.4 lens (A-10)	1. The set ring for No.1 lens (A-3) is screwed into FC frame (B-23). So remove them by turning it with a tool. 2. When the set ring for No.1 lens is removed, the No.1 lens (A-4), spacer rings for No.2 lens (A-5), No.2 lens (A-6), No.3 lens (A-7), No.4 lens barrel (A-8), No.4 lens (A-9), and set ring the order mentioned. 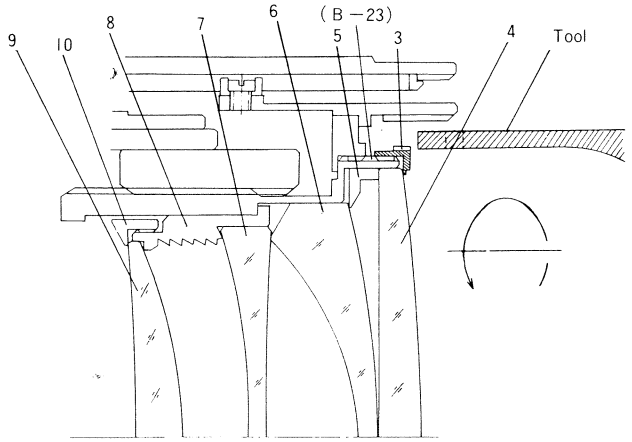		

Seq.	Parts, Sub-Ass'y to be disassembled (Fig. No.)	Description	Solvent	Exclusive Tools
3	RC Front lens sub-assy (A-22)	The RC Front lens sub-assy (A-22) is screwed into the RC Working barrel (B-30). So remove it by using a tool. 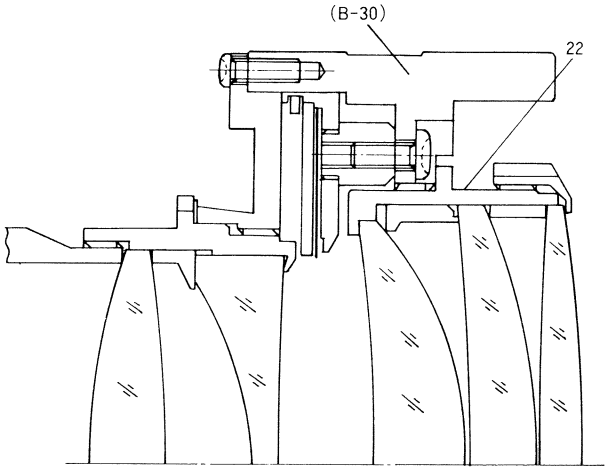		
4	Set screw for covered ring (A-24) Covered ring (A-25)			
5	RC Rear lens sub-assy (A-26) Regulating washer (A-27)	The RC Rear lens sub-assy (A-26) is screwed into the second barrel for rear lens (A-54). 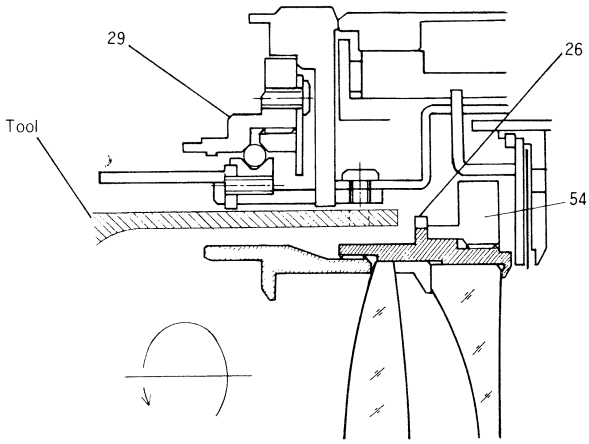		

Seq.	Parts, Sub-Ass'y to be disassembled (Fig. No.)	Description	Solvent	Exclusive Tools
6	Zoom ring leather (A-11) Set screw for zoom ring (A-12) Zoom ring (A-13) Scale ring (A-14)	Remove the zoom ring (A-13) and scale ring (A-14) by removing the set screw for zoom ring (A-12) in the forward direction. 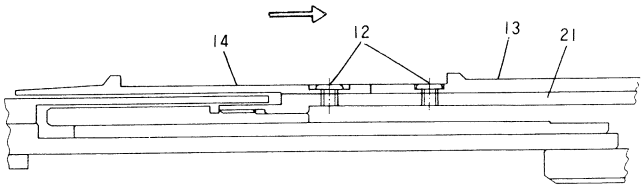 		
7	Shaft for focus ring collar (A-15) Focus ring collar (A-16) Focus ring stopper (A-17) 1.4 ø x 2.0 Plus pan head screw (A-18) Washer (A-19) Front tube (A-20) Fccus ring (A-21)	1. Before removing the front tube (A-20), inscribe a line as shown below and confirm so as to achieve correct position relations between the front tube and the set ring for front tube (B-26). 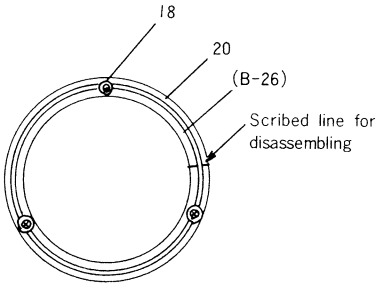 2. The focus ring (A-21) for focusing is screwed into the working ring for zoom (B-18). 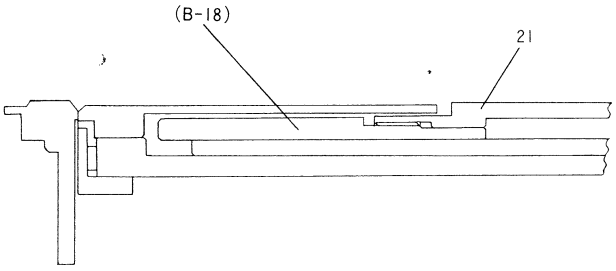 		

Seq.	Parts, Sub-Ass'y to be disassembled (Fig. No.)	Description	Solvent	Exclusive Tools
8	1.7 ø x 5.0 Countersunk screw (A-28) Lens mount sub-assy (A-29) 1.4 ø x 2.0 Plus pan head screw (A-37) Plate for main spring (A-38) Main spring (A-39) Stud for main spring (A-40) Set ring for steel ball (A-41) 1.6 ø stainless steel ball (A-42) Connection ring for diaphragm sub-assy(A-43)	Removal of lens mount sub-assy (A-29) can be facilicated with operating ring for focusing in f = 70mm condition. When removing the connection ring for diaphragm sub-assy (A-43), do so in a proper container or receptacle to prevent the steel balls from being lost.		
9	Diaphragm ring (A-30) 2 ø steel ball (A-31) Click spring (A-32) Stud for click spring (A-33) Shaft for AE lock lever (A-34) Spring for AE lock lever (A-35) AE lock lever (A-36)	When removing the diaphragm ring (A-30), care should be taken to avoid losing the 2 ø steel balls (A-31).		

Seq.	Parts, Sub-Ass'y to be disassembled (Fig. No.)	Description	Solvent	Exclusive Tools
10	Set screw for point ring (A-44) 1.7 ø x 6.0 Plus pan head screw (A-46) 1.7 ø x 4.0 Plus pan head screw (A-47) Outside tube (A-48) Regulating washer for *ff* (A-49) Point ring (A-45)	Check quantity of regulating washers for *ff* and thickness thereof and handle them with care.		
11	Stud for turning ring spring (A-50) Spring for turning ring (A-51) 1.4 ø x 3.5 Plus pan head screw (A-53) Second barrel for rear lens (A-54) 1.7 ø x 4.0 Plus pan head screw (A-52) Blade case sub-assy (A-55) Focusing sub-assy (A-56)	Confirm the mounting position by inscribing a line when removing the blade case sub-assy (A-55). By so doing, the correct aperture can be found. 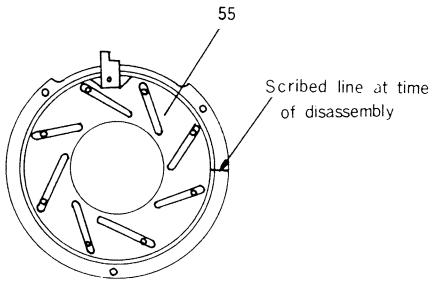 		

Seq.	Parts, Sub-Ass'y to be disassembled (Fig. No.)	Description	Solvent	Exclusive Tools
12	Set screw for zooming collar (B-12) Zooming collar (B-13) 1.7ø x 3.0 Plus pan head screw (B-14) Guide collar (B-15) 1.7ø x 2.0 Plus pan head screw (B-16) Turning ring collar (B-17) Working ring for zoom (B-18) RC Working barrel (B-30) Frictional resistor for zoom (B-31) Spring for frictional resistor (B-32)	When removing the RC Working barrel (B-30) from the zooming tube (B-33), care should be taken as the frictional resistor for zoom (B-31) and spring for frictional resistor (B-32) tend to come out. 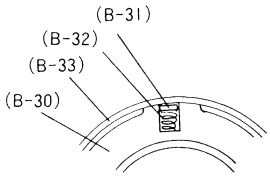 		
13	Set screw for collar B (B-19) Collar B (B-20) 1.7ø x 2.5 Plus pan head screw (B-21) Guide plate for front lens barrel (B-22) Working ring for front lens barrel (B-23) Front lens barrel (B-24)	When removing the front lens barrel (B-24) from the working ring for front lens barrel (B-23), mark the notch groove of front lens barrel (B-24) and working ring for front lens barrel (B-23) to confirm the position where the helicoid screw is removed momentarily. 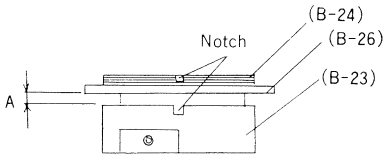 		

Seq.	Parts, Sub-Ass'y to be disassembled (Fig. No.)	Description	Solvent	Exclusive Tools
	1.4 ø x 1.6 Round head screw (B-25) Set ring for front tube (B-26)			
14	Set screw for collar B (B-27) Collar B (B-28) Turning ring for zoom (B-29) Zooming tube (B-33)			

Seq.	Parts, Sub-Ass'y to be assembled (Fig. No.)	Description	Adhesive Lubricant	Exclusive Tools
1	Zooming tube (B-33) Turning ring for zoom (B-29) Collar B (B-28) Set screw for collar B (B-27)	Secure the collar B (B-28) by matching the notch groove of the zooming tube (B-33) to the notch groove of the turning ring for zoom (B-29). 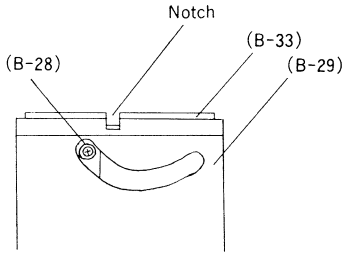 	33-Ⓖ-29 28-Ⓖ-29	
2	Working ring for front lens barrel (B-23) Front lens barrel (B-24) Set ring for front tube (B-26) Guide plate for front lens barrel (B-22) 1.7Ø x 2.5 Plus pan head screw (B-21) Collar B (B-20) Set screw for collar B (B-19)	1. Engage the notch groove of the working ring for front lens barrel (B-23) with notch groove of zooming tube (B-33). 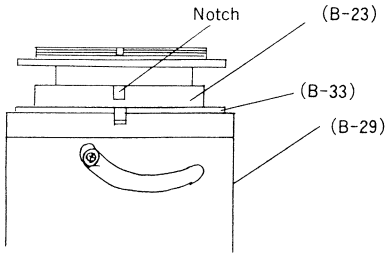 2. Before engaging the working ring for front lens barrel (B-23), work can be facilicated, by assembling the guide plate for front lens barrel (B-22) into the groove of the zooming tube (B-33) for focusing. 3. Confirm the operation by turning the turning ring for zoom (B-29).	23-Ⓖ-24 22-Ⓖ-33 20-Ⓖ-29	
3	RC Working barrel (B-30) Spring for frictional resistor (B-32) Frictional resistor for zoom (B-31)	1. Engage the notch of the main barrel for rear lens (B-30) with the notch of the zooming tube (B-33). 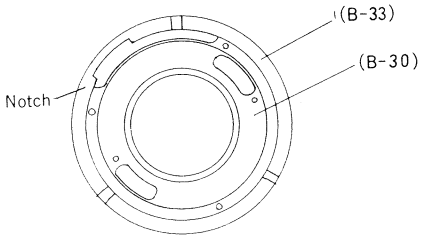 	30-Ⓖ-33	

Seq.	Parts, Sub-Ass'y to be assembled (Fig. No.)	Description	Adhesive Lubricant	Exclusive Tools
	Working ring for zoom (B-18) Turning ring collar (B-17) 1.7 ø x 2.0 Plus pan head screw (B-16) Guide collar (B-15) 1.7 ø x 3.0 Plus pan head screw (B-14) Zooming collar (B-13) Set screw for zooming collar (B-12)	2. Caution should be taken as the frictional resistor for zoom (B-31) and spring for frictional resistor (B-32) tend to come out from the cam groove of the main tube for focusing. 3. Check the operation of the working ring for zoom (B-18) for focusing by sliding it.		
4	Focusing sub-assy (A-56) Focus ring (A-21) Focus ring stopper (A-17) Front tube (A-20) Washer (A-19) Set screw for front tube (A-18) Focus ring collar (A-16) Shaft for focus ring collar (A-15)	1. Relations between the focus ring (A-21) and the working ring for zoom (B-18) at the time of screw tightening must be 1mm. 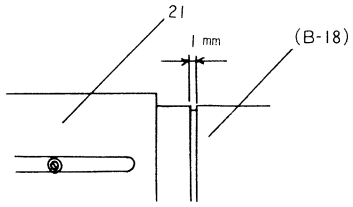 2. After mounting the focus ring collar (A-16) and shaft for focus ring collar (A-15) on the front tube (A-20), inscribe a line at the time of disassembling the set ring for front tube(B-26) and the front tube (A-20) and secure them using the set screw for front the (A-18). 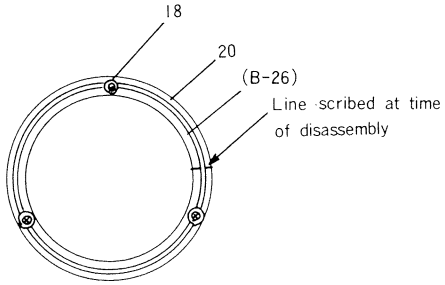 3. Check the operation of the focus ring (A-21).	21-(S640)-17	

Seq.	Parts, Sub-Ass'y to be assembled (Fig. No.)	Description	Adhesive Lubricant	Exclusive Tools
5	Blade case sub-assy (A-55) 1.7ø x 4.0 Plus pan head screw (A-52) Second barrel for rear lens (A-54) 1.4ø x 3.5 Plus pan head screw (A-53) Stud for turning ring spring (A-50) Spring for turning ring (A-51)	1. Assemble the blade case sub-assy (A-55) by matching it to the line scribed at the time of disassembly. 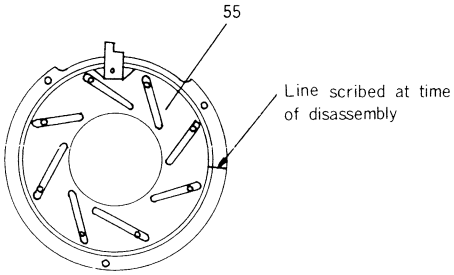 2. Temporarily secure the 1.7ø x 4.0 plus pan head screw (A-52) of the blade case sub-assy (A-55). 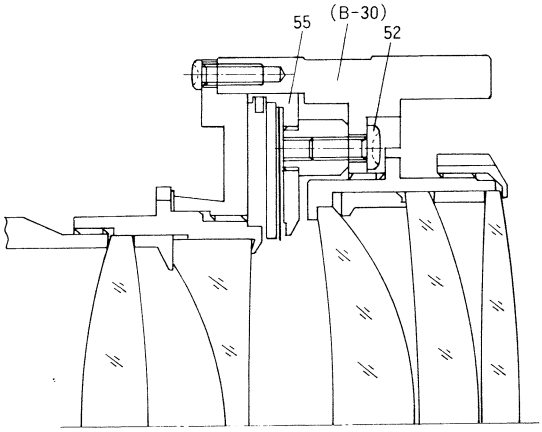 	53-[S640]-54	
6	Point ring (A-45) Regulating washer for *ff* (A-49) Outside tube (A-48) 1.7ø x 6.0 Plus pan head screw (A-46) 1.7ø x 4.0 Plus par head screw (A-47) Set screw for point ring (A-44)	1. Mount the outside tube (A-48) on the zooming tube (B-33) with each notch set. To secure them with use of 1.7ø x 4.0 plus pan head screw (A-47), tighten down while holding the outside tube (A-48). 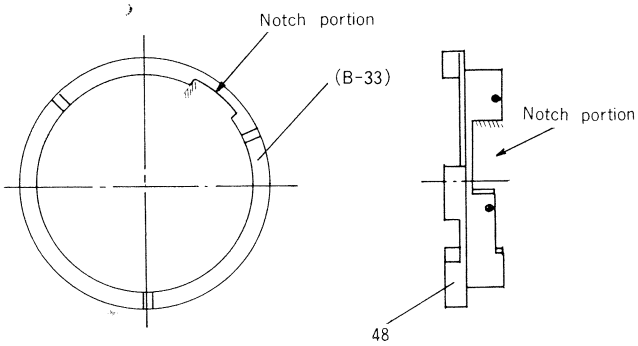 	46-[S640]-48 47-[S640]-48	

Seq.	Parts, Sub-Ass'y to be assembled (Fig. No.)	Description	Adhesive Lubricant	Exclusive Tools
		2. Mount the point ring (A-45) in position with the point of the point ring (A-45) matched to the 1.7ø x 4.0 plus pan head screw (A-47) and set screw for zooming collar (B-12). 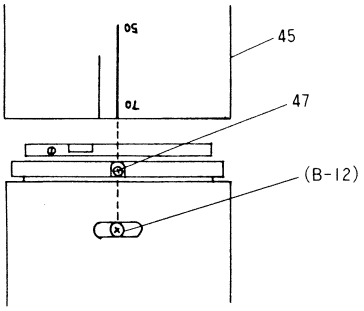		
7	Stud for click spring (A-33) Click spring (A-32) 2ø steel ball (A-31) Diaphragm ring (A-30) AE lock lever (A-36) Shaft for AE lock lever (A-34) Spring for AE lock lever (A-35)	1. Mount the click spring (A-32) as shown. 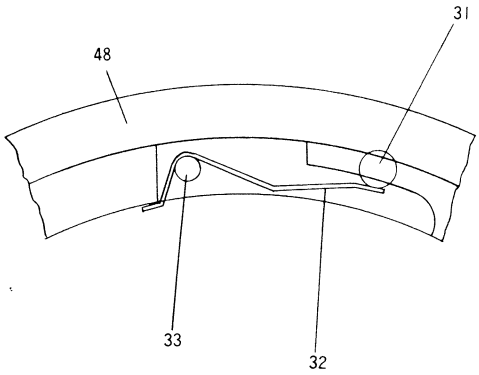 2. Hook the longer end of the spring for AE lock lever (A-35) on to the AE lock lever (A-36). 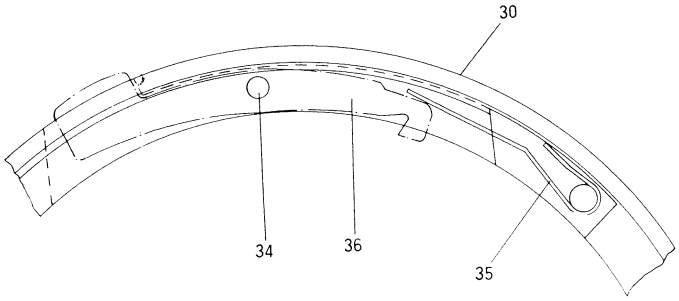 3. Mount the diaphragm ring (A-30) outside tube (A-48) while holding the AE lock lever (A-36).	30-Ⓖ-31 30-Ⓖ-48	

Seq.	Parts, Sub-Ass'y to be assembled (Fig. No.)	Description	Adhesive Lubricant	Exclusive Tools
8	Lens mount sub-assy (A-29) Connection ring for diaphragm sub-assy (A-43) 1.6ø steel ball (A-42) Set ring for steel ball (A-41) Stud for main spring (A-40) Plate for main spring (A-38) 1.4ø x 2.0 Plus pan head, screw (A-37) Main spring (A-39)	1. Check to be certain that there is no damage done to the arrow-marked point of the lens mount sub-assy (A-29), set ring for steel ball (A-41), and connection ring for diaphragm sub-assy (A-43). If any damage is found, replace it with new one. Also, never apply any type of grease to the arrow-marked points. 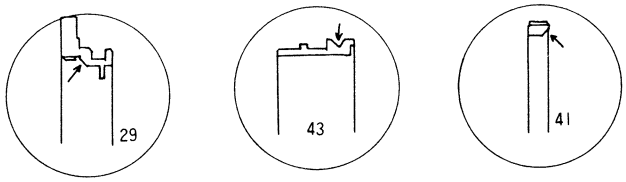 2. To insert the steel balls, use a spoon and do so in a proper container or receptacle to prevent the balls from being lost. The quantity of steel ball should be 80 pieces minus two or three. 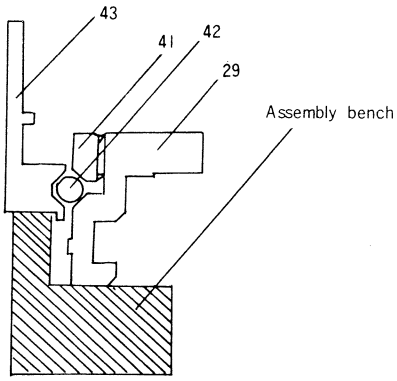 3. Slowly and carefully insert set ring for steel ball (A-41) and ensure that it smoothly operates within 0.1mm of backlash in both directions of arrow. 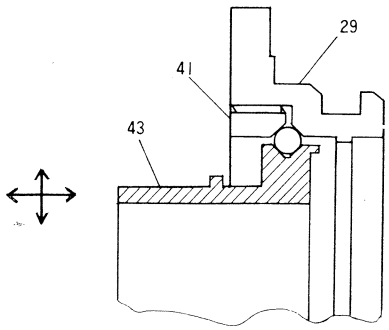 		

Seq.	Parts, Sub-Ass'y to be assembled (Fig. No.)	Description	Adhesive Lubricant	Exclusive Tools
		4. Apply adhesive at three points as shown and use care to avoid adhesive being applied to other points. 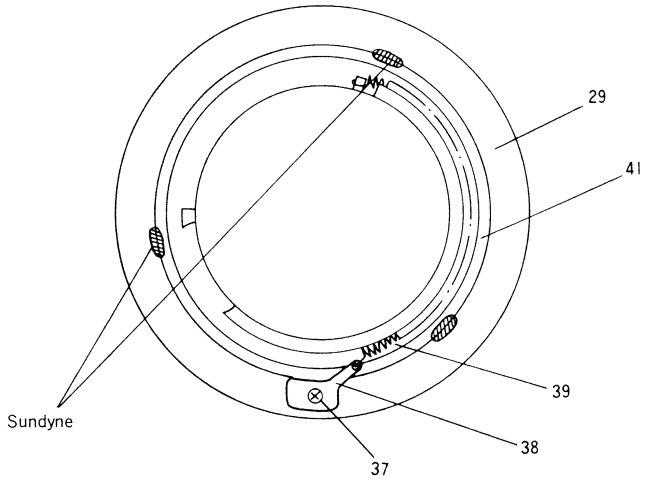	29-(S640)-41	
9	1.7ø x 5.0 counter sunk screw (A-28)	1. Mount the lens mount unit with red mark of the point ring (A-45) set to the notch of the lens mount unit. Easier assembly can be made with f = 70mm. 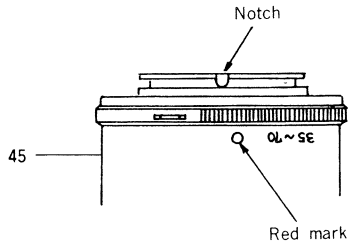 2. Confirm the operation of the ring for diaphragm ring (A-30), connection plate (B-10), and the AE lock lever (A-36).		
10	Scale ring (A-14) Zoom ring (A-13) Set screw for zoom ring (A-12)	1. Bring the turning ring for focus ring (A-21) into contact with ∞ side and f = 35mm. 2. Set the ∞ mark of the scale ring (A-14) to the index line and f = 35mm to the scale ring end face as shown. 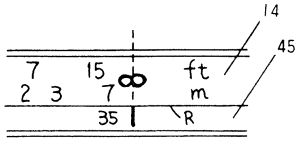	12-(S640)-21	

Seq.	Parts, Sub-Ass'y to be assembled (Fig. No.)	Description	Adhesive Lubricant	Exclusive Tools
11	Aperture adjustment	1. Loosen the 1.7Ø x 4.0 Plus pan head screw (A-52) and make necessary adjustment by turning the blade case sub-assy (A-55).	52-(S640)(B-30)	

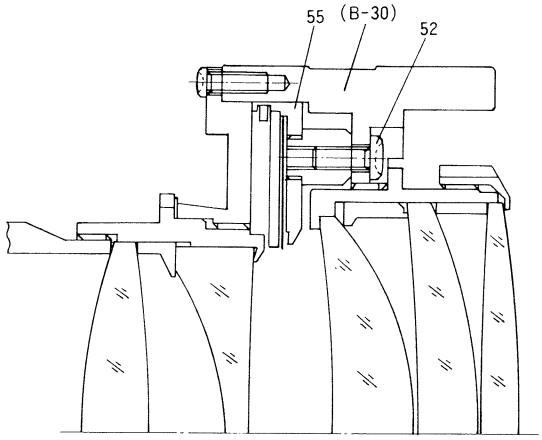

- Turning it clockwise increases aperture.
- Turning it counterclockwise decreases aperture.

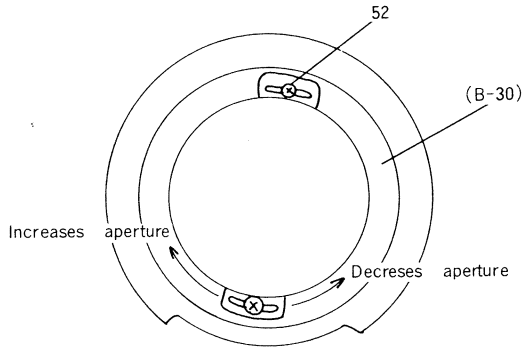

Incidentally, large inaccuracy may be avoid by setting the blade case to the line inscribed at the time of disassembly.

2. As aperture varies with timing, check the aperture with f = 35mm and f = 70mm.

	Standard Aperture	
	F 5.6	F 16
f = 35mm	5.44mm ~ 6.86mm	1.91mm ~ 2.41mm
f = 70mm	10.77mm~13.57mm	3.77mm ~ 4.75mm

Seq.	Parts, Sub-Ass'y to be assembled (Fig. No.)	Description	Adhesive Lubricant	Exclusive Tools
12	RC Front lens sub-assy (A-22) Set ring for No.4 lens (A-10) No.4 lens (A-9) No.4 lens barrel (A-8) No.3 lens (A-7) No.2 lens (A-6) Spacer ring for No.2 lens (A-5) No.1 lens (A-4) Set ring for No.1 lens (A-3) Regulating washer (A-27) RC Rear lens sub-assy (A-26)	Use special care to avoid scratching, bruising, or soiling the lens sub-assy.	8-(S640)-10 3-(S640)-(B-24)	
13	FC adjustment	Assemble with the set ring for front tube (B-26) matched to the inscribed line of the front tube (A-20). By so doing, the FC can be repositioned, but its adjustment is made in the following sequence. 1. Set f = 35mm with the lens unit mounted on the camera. 2. Turn the front lens barrel (B-24) while looking into the collimator in this condition and set the FC at the optimum focus position. 3. Focus f = 70mm in the same condition and repeat the item 2 above.		

Seq.	Parts, Sub-Ass'y to be assembled (Fig. No.)	Description	Adhesive Lubricant	Exclusive Tools
		4. Again adjust to f = 35mm and repeat the procedure all over (from item 1 to item 3 above).		
		5. When the condition in which f = 35mm and f = 70mm can be seen equal, secure the FC frame firmly using the set screw for front tube (A-18).	18-(S640)-20	
14	Engraved ring (A-2) Covered ring (A-25) Set screw for covered ring (A-24) Zooming leather (A-11)	1. Screw in the engraved ring (A-2) using a tool. 2. Ensure that the covered ring (A-25) and set screw for covered ring (A-24) do not protrude from the final face of the lens mount (B-35). 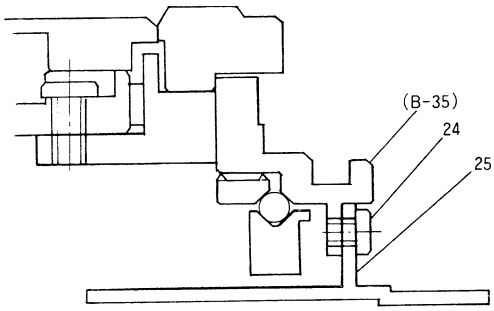	24-(S640)(B-35)	

Konica 35-70MM/F4
ZOOM HEXANON AR

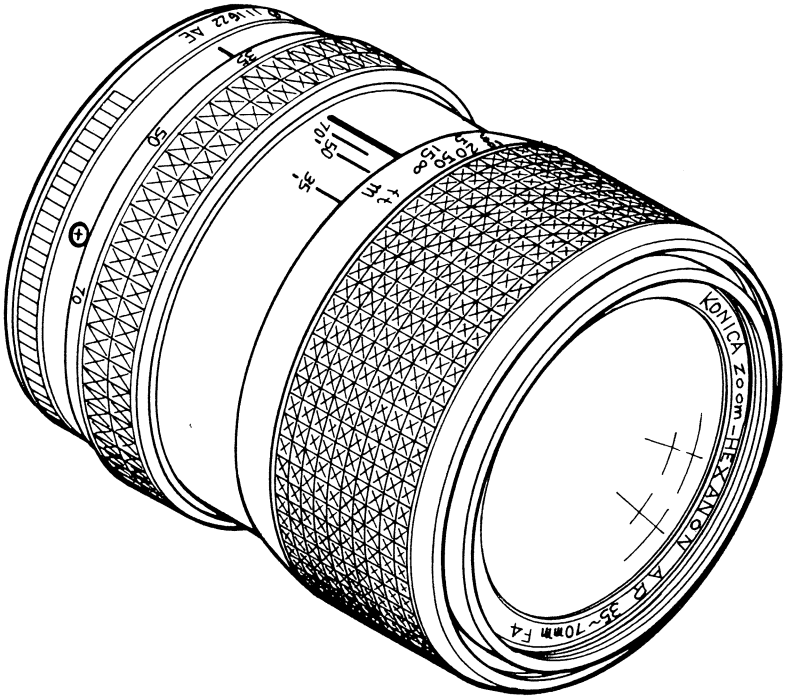

KONICA HEXANON INTERCHANGEABLE LENSES LIST OF ASSEMBLY PARTS INCLUDING COMMON PARTS

ヘキサノン交換レンズ
部品部組リスト兼共通部組部品一覧表

The assemblies and parts marked by the same symbol respectively in the table are usable commonly regardless of the model. However, the assemblies and parts marked ○ and □ are exclusive and are not interchangeable with models.

※ ▭ : Not supply parts

表中、同一符号の部組品及び部品については機種に関係なく共通に使用出来ます。

但し、○、□印の部組品及び部品は専用部品であり機種間の互換性はない。

※ ▭ : 支給対象外

Sub-assy No. / Parts No. 部組番号 部品番号	Sub-assy Name / Parts Name 部組・部品名称		Sort 分類	WIDE ANGLE LENS 広角レンズ			STANDERD LENS 標準レンズ		ZOOM LENS ズームレンズ		
			f : F	21mm F2.8	24mm F2.8	35mm F2.8	40mm F1.8	50mm F1.8	35～70mm F3.5	70～150mm F 4	35～70 mm F4
			Model No. 製番	3335	3331	3421	3311	3325	3578	3568	3555
			Model Name 略称	IRA	ISA	ILA	BRA	BTA	KRA	KZA	QCA
101	羽根ケース部組	Blade case sub-assy							○	○	○
109	絞り羽根部組	Diaphragm blade sub-assy		⊗	⊗	⊗	⊗	○	○	○	○
202	ヘリコイド部組	Helicoid sub-assy		○	○	○	○	○			
203	接続リング部組	Connection ring sub-assy		⊗	⊗	○	⊗	○	○	○	○
251	ズーム部組	Zoom sub-assy							○	○	○
261	ヘリコイド部組	Helicoid sub-assy								○	
267	ズームフォーカス部組	Zoom focus sub-assy								○	
401	マウント部組	Lens mount sub-assy		◐	◐	◐	◐	◐	◐	◐	◐
501	レンズキャップ部組	Lens cap sub-assy		⊕	⊕	⊕	⊕	⊕	⊕	⊕	⊕
531	フード部組	Lens hood sub-assy								○	
701	前群レンズ部組	Front lens sub-assy		○	○	○	○	○		○	○
702	後群レンズ部組	Rear lens sub-assy		○	○	○	○	○		○	○
703	V2レンズ部組	V2 lens sub-assy								○	○
704	Mレンズ部組	M lens sub-assy								○	
708	RC後群レンズ部組	RC Rear lens sub-assy							○		
709	RC前群レンズ部組	RC Front lens sub-assy							○		
07101	羽根ケース	Blade case		⊡	⊡	⊡	⊡	□	□	□	□
07102	駆動リング	Turning ring		■	■	□	■	□	□	□	□
07103	駆動リングバネ	Turning ring spring							◪		◪
07159	作動バネ	Main spring		▣	▣	▣	▣	▣	⧗	□	⧗
07164	作動バネかけ	Main spring hang plate		⊠	⊠	⊠	⊠	⊠	⊠		⊠
07204	直進案内板	Helicoid guide plate		⊘	⊘	⊕	⊘	⊕			
07209	フォーカスリング止めネジ	Focus ring set screw		◆	◆	◆	◆	□			
07215	ボール押え枠	Steel ball set ring		▨	▨	▨	▨	▨	▨	▨	▨
07219	フォーカスリング光皮	Focus ring leather		□	◇	◇	□	◇			
07301	絞りリング	Aperture ring		⊞	⊞	⊞	●	●	◥	□	◥
07305	クリックバネ	Click spring		⊞	⊞	⊞	⊞	⊞	⊞	⊞	⊞
07306	クリックバネ柱	Click spring stud		◧	◧	◧	◧	◧	□	◧	◧
07311	前　筒	Front tube		□	○	○	□	□	□		□
07321	AEロックレバー	AE lock lever		◥	◥	◥	◥	◥	◥	◥	◥
07322	AEロックレバー軸	AE lock lever shaft		⧓	⧓	⧓	⧓	⧓	⧓	⧓	⧓
07326	AEロックレバーバネ	AE lock lever spring		⧋	⧋	⧋	⧋	⧋	⧋	⧋	⧋
07403	化粧リング	Covered ring		△	△	△	□	□	□	□	□
07407	化粧リング止めネジ	Covered ring set screw		⧉	⧉	⧉	⧉	⧉	⧉	⧉	⧉
07511	マウントキャップ	Lens mount cap		▥	▥	▥	▥	▥	▥	▥	▥
07984	後鏡枠押えリング	Rear lens barrel set ring		◺	◺	◺				□	□
07985	ピント調整座金　t=0.02	Regulation washer t=0.02		⧋	⧋					□	□
07986	ピント調整座金　t=0.05	Regulation washer t=0.05		⬓	⬓					□	
07987	ピント調整座金　t=0.3	Regulation washer t=0.3			▼	▼				□	□

A-1 Konica ZOOM HEXANON AR 35-70MM/F4 MODEL No. 3555

1	2	3	4	5	6
Fig. No.	Parts No. or Sub-assembly	部品・部組名称	Parts name or Sub-assembly name	Note	Disassembling Fig. index
A-1	07219	フォーカス光皮	Focus ring leather		
A-2	16405	1.7φ×2.0 剣先ネジ	1.7φ×2.0 Round hed screw	〔S640〕-07217	
A-3	07311	前 筒	Front tube		
A-4	701	FCレンズ部組	FC Lens sub-assy		C
A-5	702	RC-1レンズ部組	RC-1 Lens sub-assy		C
A-6	07407	化粧リング止めネジ	Covered ring setscrew		
A-7	07403	化粧リング	Covered ring		
A-8	63489	1.7φ×5.0 皿小ネジ	1.7φ×5.0 Plus counter sunk screw		
A-9	07215	ボール押え枠	Steel ball set ring	〔S640〕-07401	
A-10	51160	1.6φステンレスボール	1.6φ Stainless steel ball		
A-11	203	接続リング部組	Connection ring sub-assy		B
A-12	07159	作動バネ	Main sprig	Ⓜ-07210	
A-13	65284	1.4φ×2.0 ナベ小ネジ	1.4φ×2.0 Plus pan head screw	〔S640〕-07401	
A-14	07164	作動バネ掛け	Main spring stud		
A-15	401	マウント部組	Lens mount sub-assy		C
A-16	07301	絞りリング	Aperture ring		
A-17	07326	AEロックレバーバネ	AE lock lever spring		
A-18	07322	AEロックレバー軸	AE lock lever shaft		
A-19	07321	AEロックレバー	AE lock lever		
A-20	51209	2.0φ鋼球	2.0φ Steel ball	Ⓜ-07301	
A-21	07305	クリックバネ	Click spring		
A-22	07306	クリックバネ柱	Click spring stud		
A-23	07984	押えリング	Set ring		
A-24	703	RC-2レンズ部組	RC-2 Lens sub-assy		C
A-25	07987	RC枠スペーサー	RC-ring spacer	07987 t=0.1 07988 t=0.2	
A-26	61475	1.7φ×4.5 ナベ小ネジ	1.4φ×4.5 Plus pan head screw	〔S640〕-07217	
A-27	07217	フォーカスリング	Focusing ring		
A-28	65255	1.4φ×1.4 ナベ小ネジ	1.4φ×1.4 Plus pan head screw	〔S640〕-07217	
A-29	07266	フォーカスストッパー	Focusing stopper		
A-30	65395	1.7φ×1.8 ナベ小ネジ	1.7φ×1.8 Plus pan head screw	〔S640〕-07307	

Konica ZOOM HEXANON AR 35-70MM/F4

MODEL No. 3555

1	2	3	4	5	6
Fig. No.	Parts No. or Sub-assembly	部品・部組名称	Parts name or Sub-assembly name	Note	Disassembling Fig. index
A-31	07307	赤外リング	Infrared ring		
A-32	07269	フォーカス ストッパーネジ	Focusing stopper screw	〔S640〕-07307	
A-33	07268	ズーム光皮	Zoon leather		
A-34	61445	1.7φ×3.0 ナベ小ネジ	1.7φ×3.0 Plus pan head screw	〔S640〕-07267	
A-35	07267	ズームリング	Zoom ring		
A-36	07265	指標リング止めネジ	Index ring setscrew	〔S640〕-07264	
A-37	07264	指標リング	Index ring		
A-38	61425	1.7φ×2.5 ナベ小ネジ	1.7φ×2.5 Plus pan head screw	〔S640〕-07251	
A-39	07203	取付座	Out side tube		
A-40	61425	1.7φ×2.5 ナベ小ネジ	1.7φ×2.5 Plus pan head screw	〔S640〕-07213	
A-41	07213	駆動リングストッパー	Turning ring stopper		
A-42	07221	ff調整座金	Regulation washer	07221 t=0.03 07222 t=0.05 07223 t=0.1 07224 t=0.2 07225 t=0.3 07226 t=0.5	
A-43	63255	1.4φ×1.4 皿小ネジ	1.4φ×1.4 Plus counter sunk screw	〔S640〕-07104	
A-44	07104	駆動リング補助アーム	Turning ring arm		
A-45	07103	駆動リングバネ	Turning ring spring		
A-46	61445	1.7φ×3.0 ナベ小ネジ	1.7φ×3.0 Plus pan head screw	〔S640〕-07251	
A-47	101	羽根ケース部組	Blade case sub-assy		B
A-48	251	ズーム部組	Zoom sub-assy		B

Konica 35-70MM/F4
ZOOM HEXANON AR

A

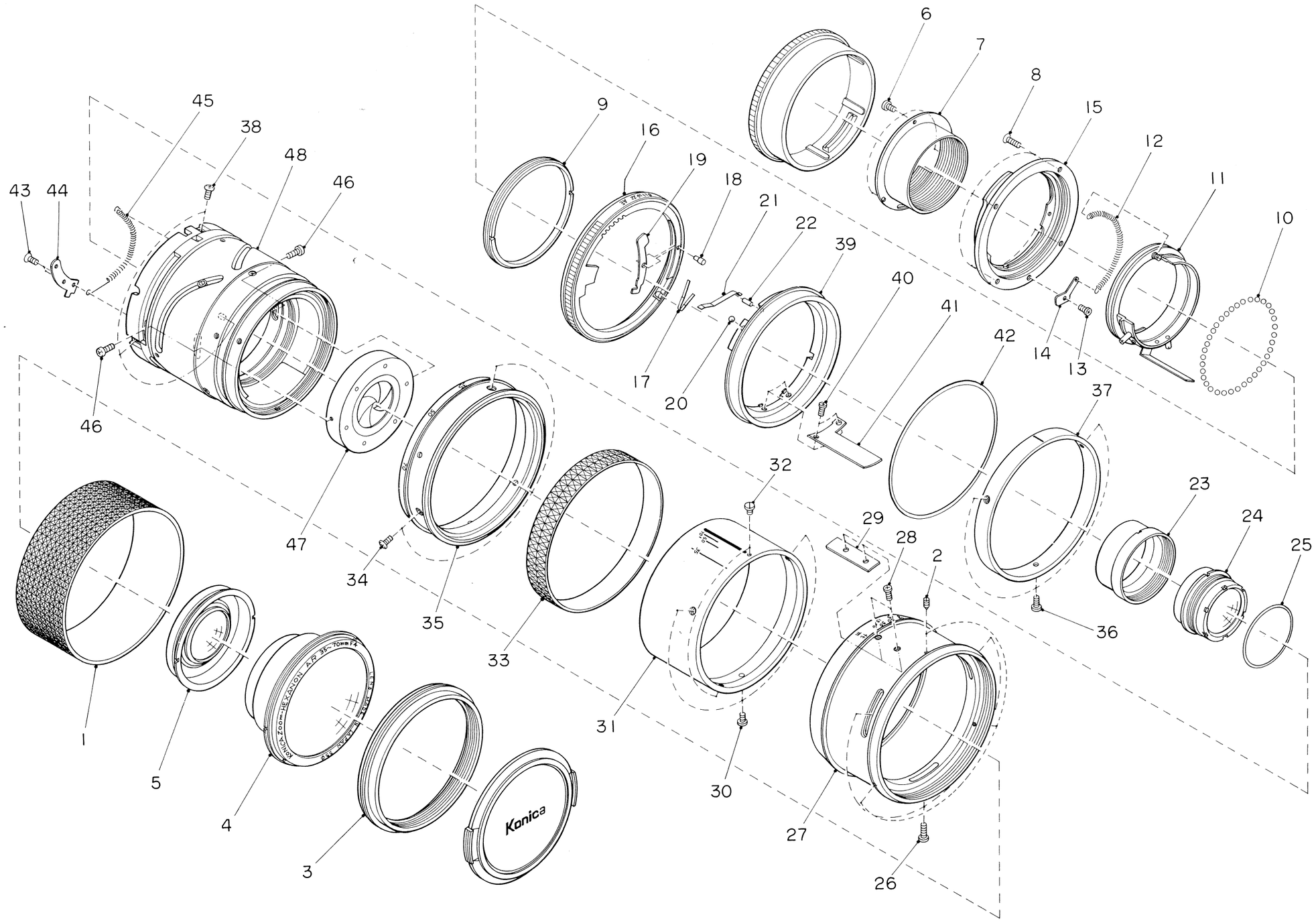

Konica ZOOM HEXANON AR 35-70MM/F4

MODEL No. 3555

1	2	3	4	5	6
Fig. No.	Parts No. or Sub-assembly	部品・部組名称	Parts name or Sub-assembly name	Note	Disassembling Fig. index
	101	羽根ケース部組	Blade case sub-assy		
B-1	X07105	リング押え	Turning ring holder		
B-2	X07102	駆動リング	Turning ring		
B-3	109	絞り羽根部組	Diaphragm blade sub-assy		B
B-4	X07101	羽根ケース	Blade case		
	109	絞り羽根部組	Diaphragm blade sub-assy		
B-5	X07112	絞り羽根	Diaphragm blade dowell		
B-6	X07111	絞り羽根	Diaphragm blade		
	203	接続リング部組	Connection ring sub-assy		
B-7	65324	1.4φ×3.0 ナベ小ネジ	1.4φ×3.0 Plus pan head screw	〔S640〕-07231	
B-8	X07231	本体接続板	Connection plate		
B-9	61285	1.4φ×2.0 ナベ小ネジ	1.4φ×2.0 Plus pan head screw	〔S640〕-07212	
B-10	X07212	接続レバー	Connection lever		
B-11	X07162	リング制限ネジ	Stopper screw	〔S640〕-07210	
B-12	X07161	作動バネ柱	Main spring stud	〔S640〕-07210	
B-13	X07210	接続リング	Connection ring		
	251	ズーム部組	Zoom sub-assy		
B-14	X07262	FCカラー止めネジ	FC Collar set screw	〔S640〕-07255	
B-15	X07263	FCカラー	FC Collar	Ⓖ-07252	
B-16	X07260	RCカラー止めネジ	RC Collar set screw	〔S640〕-07259	
B-17	X07261	RCカラー	RC Collar	Ⓖ-07252	
B-18	X07259	RC摺動枠	RC Slide ring		
B-19	X07271	スライド板	Slide plate	Ⓖ-07255	
B-20	X07272	スライド板バネ	Slide plate spring		
B-22	X07161	作動バネ柱	Main spring stud	〔S640〕-07259	
B-22	X07202	ヘリコイド雌	Helicoid female	Ⓖ-07255	
B-23	65425	1.7φ×2.5 ナベ小ネジ	1.7φ×2.5 Plus pan head screw	〔S640〕-07270	

Konica ZOOM HEXANON AR 35-70MM/F4

MODEL No. 3555

1	2	3	4	5	6
Fig. No.	Parts No. or Sub-assembly	部品・部組名称	Parts name or Sub-assembly name	Note	Disassembling Fig. index
B-24	X07270	カム押えリング	Cam holding ring		
B-25	X07252	カムリング	Cam ring	Ⓖ-07251	
B-26	61375	1.7φ×1.4 ナベ小ネジ	1.7φ×1.4 Plus pan head screw	〔S640〕-07251	
B-27	X07251	主　胴	Main tube	Ⓖ-07252	
B-28	X07255	FC摺動枠	FC Slide ring	Ⓖ-07202	

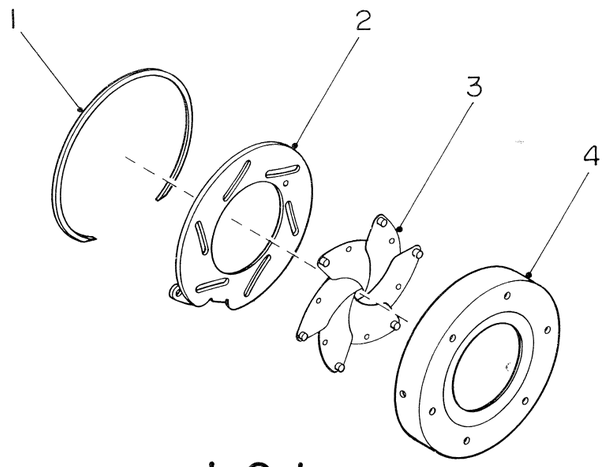

101

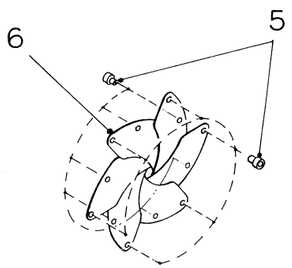

109

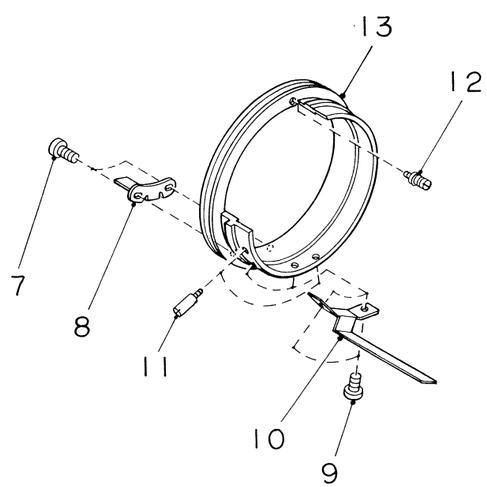

203

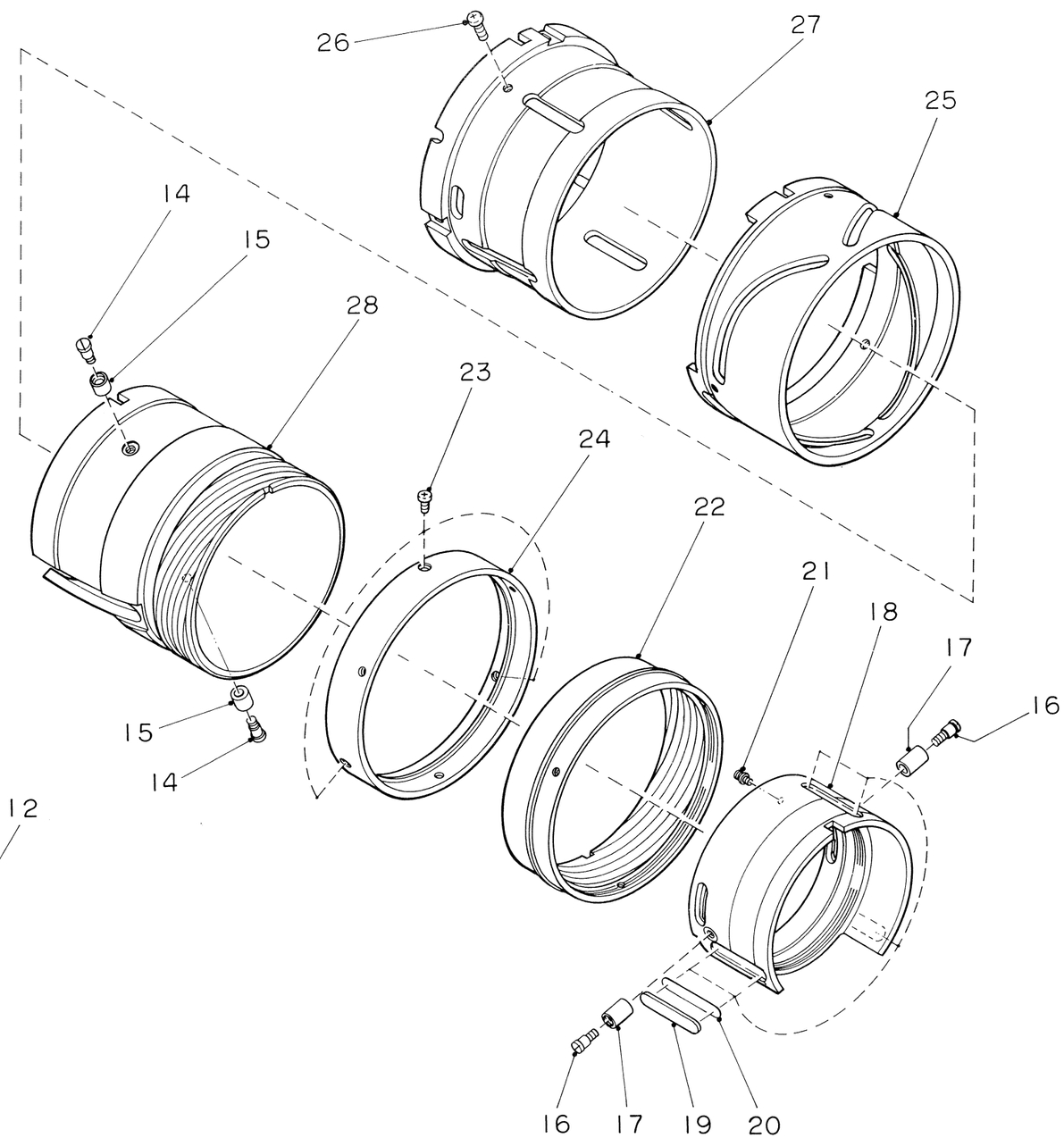

251

C-1 Konica ZOOM HEXANON AR 35-70MM/F4 MODEL No. 3555

1	2	3	4	5	6
Fig. No.	Parts No. or Sub-assembly	部品・部組名称	Parts name or Sub-assembly name	Note	Disassembling Fig. index
	401	マウント部組	Lens mount sub-assy		
C-1	X07402	マウント制限ピン	Lens mount limitation screw	〔S640〕-07401	
C-2	X07401	マウント	Lens mount		
	701	FCレンズ部組	FC lens sub-assy		
C-3	X07951	彫刻リング	Engrave ring	〔S640〕-07952	
C-4	X07901	第1レンズ	No. 1 lens		
C-5	X07954	第1、第2レンズスペーサー	No. 1, No. 2 lens spacer		
C-6	X07902	第2レンズ	No. 2 lens		
C-7	X07903	第3レンズ	No. 3 lens		
C-8	X07955	第4レンズ押え	No. 4 lens set ring	〔S640〕-07952	
C-9	X07904	第4レンズ	No. 4 lens		
C-10	X07952	FC枠	FC lens farrel		
	702	RC-1レンズ部組	RC-1 lens sub-assy		
C-11	X07905	第5レンズ	No. 5 lens		
C-12	X07961	RC前枠	RC front lens barrel		
	703	RC-2レンズ部組	RC-2 lens sub-assy		
C-13	X07982	第6レンズ押え	No. 6 lens set ring	〔S640〕-07981	
C-14	X07906	第6レンズ	No. 6 lens		
C-15	X07983	第8レンズ押え	No. 8 lens set ring	〔S640〕-07981	
C-16	X07908	第8レンズ	No. 8 lens		
C-17	X07985	第7、第8レンズスペーサー	No. 7, No. 8 lens spacer		
C-18	X07907	第7レンズ	No. 7 lens		
C-19	X07981	RC枠	RC lens barrel	〔S640〕-07259	

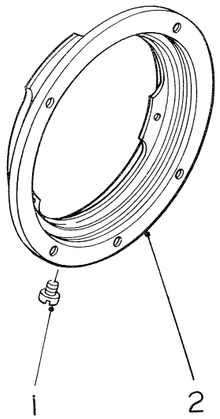

401

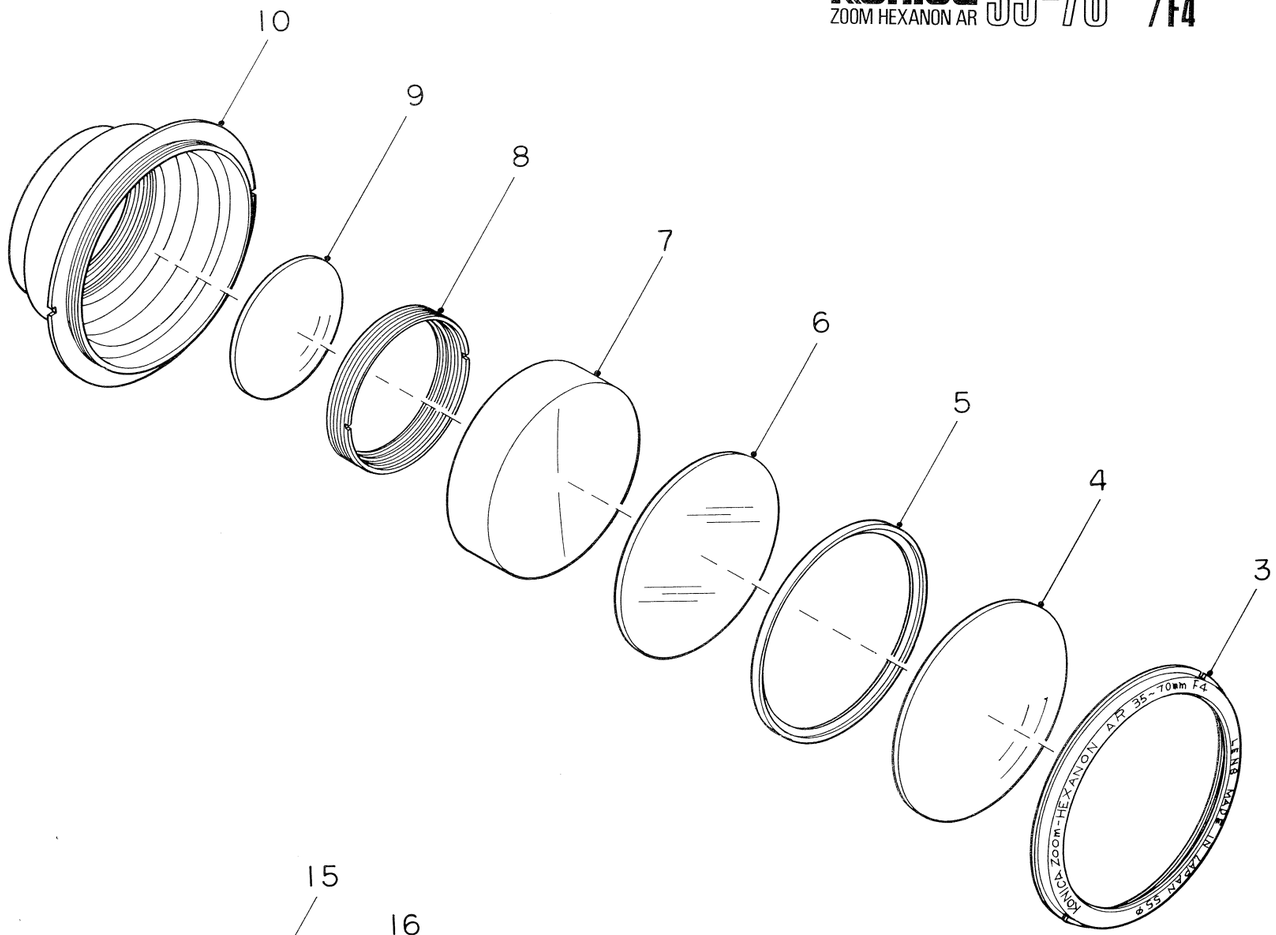

701

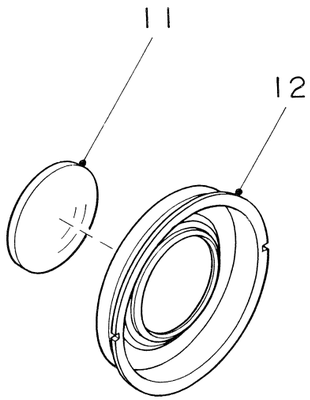

702

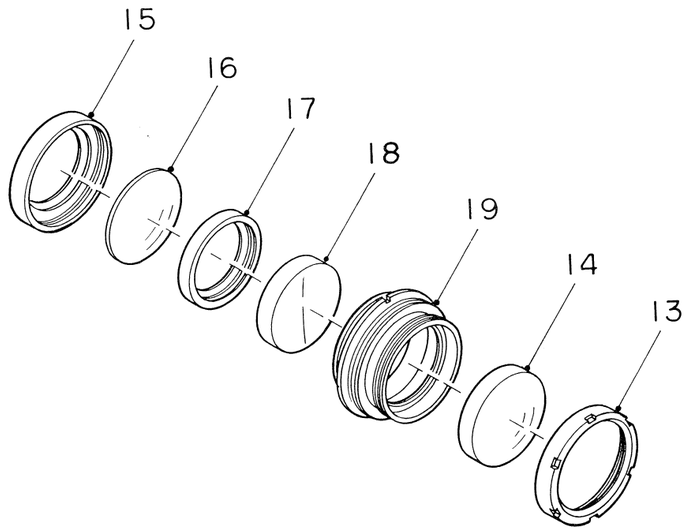

703

D-1

Packing specification for domestic
国内用包装仕様

MODEL No. 3555

1	2	3	4	5	6
Fig. No.	Parts No. or Sub-assembly	部品・部組名称	Parts name or Sub-assembly name	Note	Disassembling Fig. index
D-1	501	レンズキャップ部組	Lens cap sub-assy		
D-2	07511	マウントキャップ	Lens mount cap		
D-3	90410	シリカゲル(5g)	Silicagel desiccant (5g)		
D-4	90310	レンズ内包用ポリ袋	Lens wrapping bag		
D-5	×	シール用セロテープ	Cello-tapes		
D-6	×09901	レンズケース	Lens case		
D-7	09905	リストストラップ	Wrist strap		
D-8	×07531	フード(55φ)	Hood (55φ)		
D-9	90350	フード内包用ポリ袋	Hood wrapping bag		
D-10	90180	フード用化粧箱	Hood carton box		
D-11	90340	説明書用ポリ袋	Wrapping bag		
D-12	90561	品質保証書（コニカカード付）	Guranty card (With konica card)		
D-13	90531	プライスカード	Price card		
D-14	90571	価格一覧表	Price list		
D-15	90511	交換レンズ説明書（和文）	Interchangeable lenses instruction booklet in Japanese		
D-16	90611	交換レンズ差込み説明書(和文)	Interchangeable lenses instruction insert paper in Japanese		
D-17	90591	3W案内書（和文、英文）	World-wide warranty system guide in Japanese and English		
D-18	90110	化粧箱	Carton box		
D-19	90140	外装箱(6ヶ詰)	Carton box (six boxes)		
D-20	×	製品出荷記録用紙			

ZOOM MECHANISM

1. ZOOM SYSTEM

The zoom mechanism is of a two-ring turning system with a zoom ring (A-35) and a focus ring (A-27).

2. CHANGES IN FOCAL LENGTH

When the focal length changes $f = 70 \Rightarrow f = 35$, the FC lens sub-assembly (A-4) goes forward and at the same time the RC-1 lens sub-assembly (A-5) and the RC lens sub-assembly (A-24) go backward. It is of such a two-group zoom system that a change in the gap between the FC lens sub-assembly and the RC-1 lens sub-assembly leads to a change in focal length.

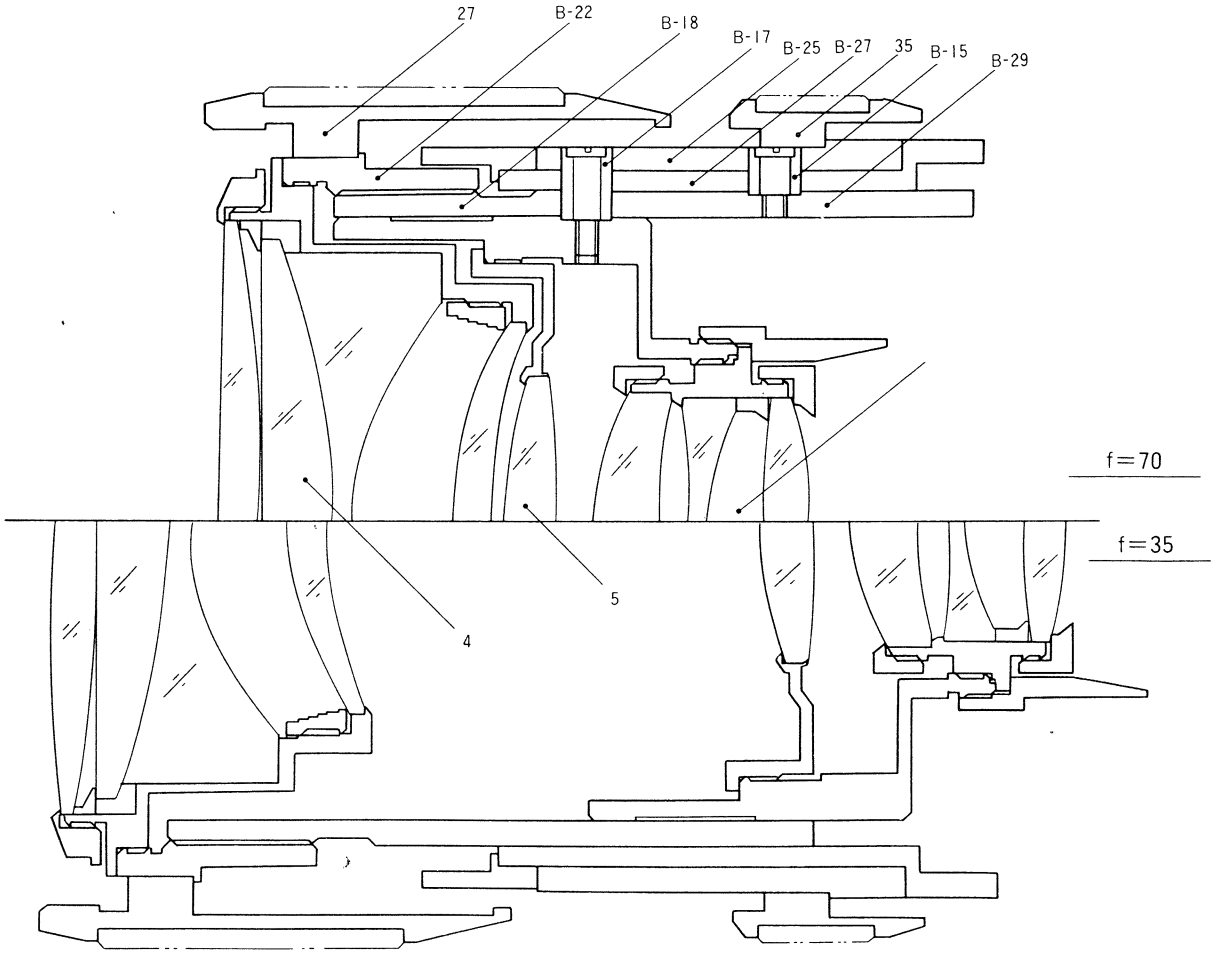

Fig.- 1

3. MECHANISM AND ACTION OF EACH SUB-ASSEMBLY

The main tube (B-27) serves as the basis for movement. This device is fitted to a base plate. The cam ring (B-25) revolves as it is engaged with the outer circle of the main tube and the FC slide ring (B-18) is engaged with the inner circle. The cam moves back and forth in an arc of 4° in the turning direction.

Each action is controlled by long grooves cut in the cam ring and the main tube.

As indicated in the figure, two cams are cut for the FC and RC slide. The cams are connected with the FC and RC rings with the FC collar (B-15) and the RC collar (F-17), respectively, by means of the long groove cut in the main tube. When the cam ring is revolved in the direction of ⟹ shown in the figure, the zoom collar moves in the direction of ➡ in the figure, the FC slide ring moves along the optical axis and the RC slide ring at a slant of 4°.

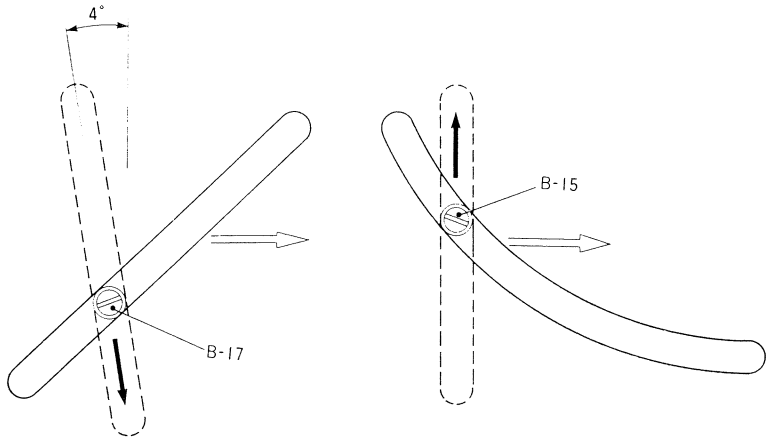

Fig.- 2

DISASSEMBLING PROCEDURES

Seq.	Parts, Sub-Ass'y to be disassembled (Fig. No.)	Description	Solvent	Exclusive Tools
1	Focus ring leather (A-1) Round-head screw (A-2) Front tube (A-3)	The front tube (A-3) is set to the focus ring (A-27) with three round-head screws (A-2). Detach the front tube with a rubber (flat rubber) sheet.	T ↓ 2-(S640)-27	
2	FC lens sub-assy (A-4) RC-1 lens sub-assy (A-5)	1. The FC lens sub-assembly is screwed in on the helicoid female (B-23). 2. The RC-1 lens sub-assembly (A-5) is screwed in on the RC slide ring (A-18). 3. Use a universal wrench for both sub-assemblies. Do not disassembly the FC lens sub-assembly, unless it is absolutely necessary to do so. 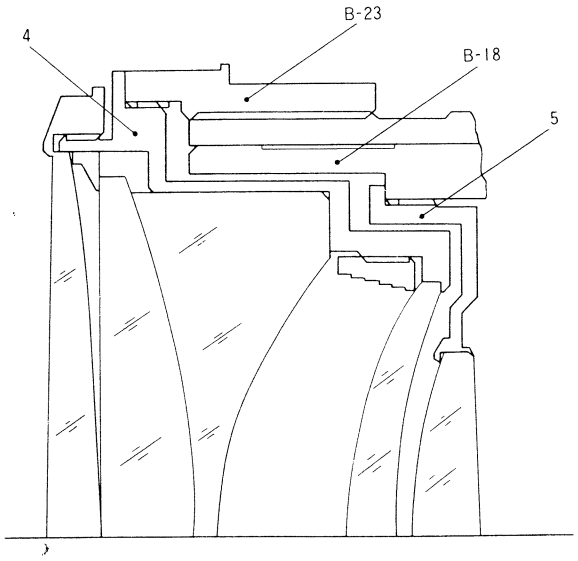 Fig.-1		
3	Covered ring set screw (A-6) Covered ring (A-7)			

DISASSEMBLING PROCEDURES

Seq.	Parts, Sub-Ass'y to be disassembled (Fig. No.)	Description	Solvent	Exclusive Tools
4	1.7ø x 5.0 plus counter sunk screw (A-8) Steel ball set ring (A-9) 1.6ø stainless steel ball (A-10) Connection ring sub-assy (A-11) Main spring (A-12) 1.4ø x 2.0 plus pan head screw (A-13) Main spring stud (A-14) Lens mount sub-assy (A-15)	1. To facilitate the disassembling of the set ring (A-23) and the RC-2 lens sub-assembly (A-24), take step 4 beforehand. 2. All devices from the steel ball set ring (A-9) to the lens mount sub-assembly (A-15) may be taken out as units. Do not disassemble them unless it is absolutely necessary to do so. 3. The connection lever (B-10) is so thin that care must be exercised to prevent it from being accidentally bent and deformed. 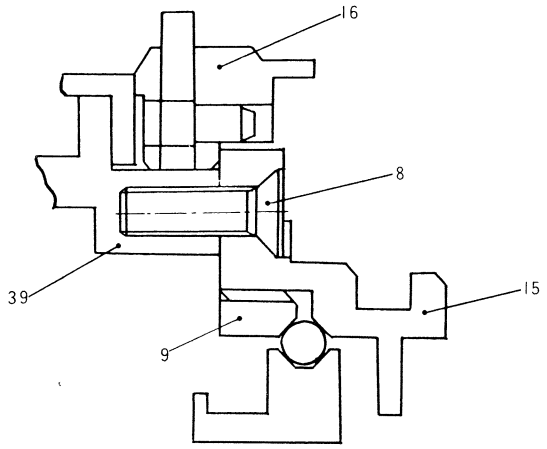 Fig.-2	T ↓ 9-(S640)-15 T ↓ 14-(S640)-15	
5	Aperture ring (A-16) AE lock lever spring (A-17) AE lock lever shaft (A-18) AE lock lever (A-19)	1. The devices from the aperture ring (A-16) to the AE lock lever (A-19) may be taken out as units. Do not assemble them unless it is absolutely necessary to do so. 2. The 2.0 ø steel ball (A-20) easily rolls away. Do not lose it. 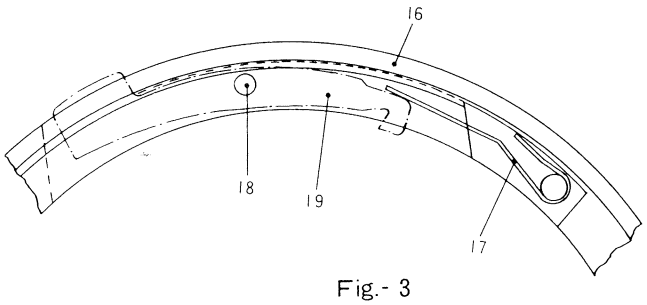 Fig.- 3		

DISASSEMBLING PROCEDURES

Seq.	Parts, Sub-Ass'y to be disassembled (Fig. No.)	Description	Solvent	Exclusive Tools
6	2.0ø steel ball (A-20) Click spring (A-21) Click spring stud (A-22)	Do not assemble unless it is absolutely necessary to do so. When disassembling is done, the click spring (A-21) will sometimes be accidentally bent and its precision distorted. Do not bend it with unreasonable force. 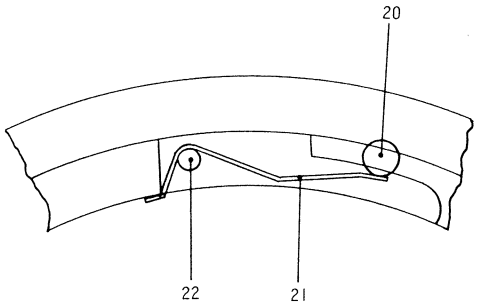 Fig.- 4		
7	Set ring (A-23) RC-2 ring sub-assy (A-24) RC-ring spacer (A-25)	For the set ring (A-23) and the RC-2 lens sub-assembly make sure that a universal wrench is used. It is advisable to use a sheet of flat rubber or something alike to prevent a crack of the set ring which is made of resin. 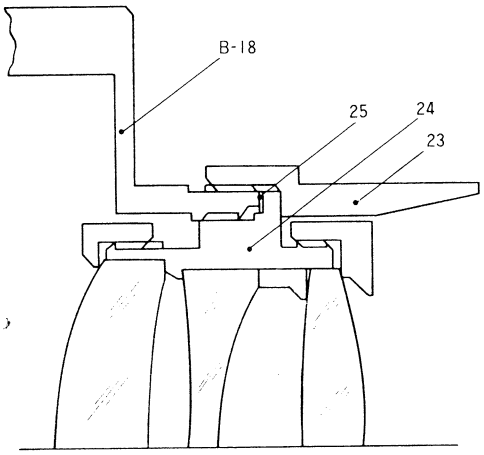 Fig.- 5		

DISASSEMBLING PROCEDURES

Seq.	Parts, Sub-Ass'y to be disassembled (Fig. No.)	Description	Solvent	Exclusive Tools
8	1.7ø x 4.5 plus pan head screw (A-26) Focus ring (A-27) 1.4ø x 1.4 plus pan head screw (A-28) Focusing stopper (A-29)	1. Before the plus pan head screw (A-26) is taken off, put mark-off lines on the focus ring (A-27) and the helicoid frmale (B-25), and the lines will serve as a yardstick when they are reassembled. 2. Do not disassemble the plus pan head screw (A-28) and the focusing stopper (A-29) unless it is absolutely necessary to do so. 3. Detach the focusing ring (A-27) with the lens barrel set to f = 70. 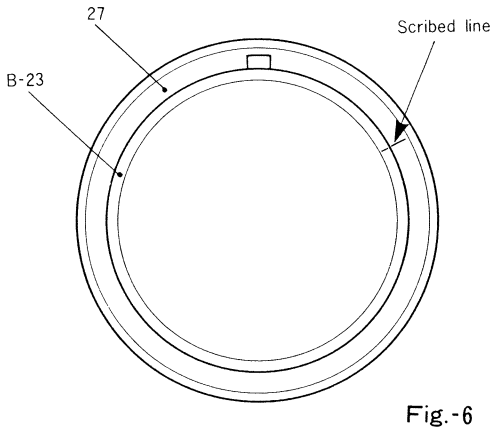 Fig.-6	T ↓ 26-(S640)-27 T ↓ 28-(S640)-29	
9	1.7ø x 1.8 pan head screw (A-30) Infrared ring (A-31) Focus stopper screw (A-32)	Do not disassemble the focus stopper screw (A-32) unless it is absolutely necessary to do so.	T ↓ 30-(S640)-31 T ↓ 32-(S640)-31	
10	Zoom leather (A-33) 1.7ø x 3.0 plus pan head screw (A-34) Zoom ring (A-35)		T ↓ 34-(S640)-35	

Seq.	Parts, Sub-Ass'y to be disassembled (Fig. No.)	Description	Solvent	Exclusive Tools
11	Index ring set screw (A-36) Index ring (A-37)		T → 36-(S640)-39	
12	1.7ø x 2.5 plus pan head screw (A-38) Outside tube (A-39) 1.7ø x 2.5 plus pan head screw (A-40) Turning ring stopper (A-41) Regulation washer (A-42)		T → 38-(S640)-39 T → 40-(S640)-41	
13	1.4ø x 1.4 plus counter sunk screw (A-43) Turning ring arm (A-44) Turning ring spring (A-45)	The turning ring arm (A-44) is set to the turning ring (B-2). When it is unnecessary to disassemble the blade case sub-assembly (A-47), it is advisable to take out the RC slide ring (B-18). (An adjustment of the aperture may be dispensed.) See (2) and (3) in step 15.	T → 43-(S640)-44	
14	1.7ø x 3.0 plus pan head screw (A-46) Blade case sub-assy (A-47) Zoom sub-assy (A-48)	1. Before the plus pan head screw (A-46) is taken off, put mark-off lines on the blade case sub-assembly (A-47) and the RC slide ring (B-18) to facilitate an adjustment of the aperture when assembling is done. 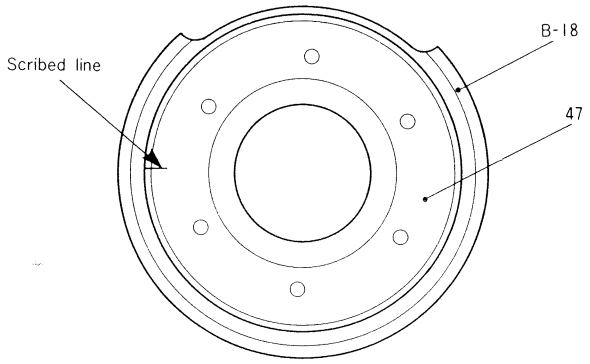 Fig.-7	T → 46-(S640)-(B-18)	

Seq.	Parts, Sub-Ass'y to be disassembled (Fig. No.)	Description	Solvent	Exclusive Tools
		2. As the lens barrel is moved out (toward f = 35), the plus pan head screw (A-46) is visible.		
15	FC collar set screw (B-14) FC collar (B-15) RC collar set screw (B-16) RC collar (B-17) RC slide ring (B-18) Slide plate (B-19) Slide plate spring (B-20) Main spring stud (B-21) Helicoid female (B-22) 1.7ø x 2.5 plus pan head screw (B-23) Cam holding ring (B-24) Cam ring (B-25) 1.7ø x 1.4 plus pan head screw (B-26) Main tube (B-27) FC slide ring (B-28)	1. Right before the helicoid comes off, draw mark-off lines on the helicoid female (B-22) and the FC slide ring (B-28) to faciliate assembling work. 2. When the RC slide ring (B-18) is taken out, there are cases where the slide plate (B-19) and the slide spring (B-20) leap out. To prevent this, do not pull out the RC slide ring at a stroke. 3. Of the three plates of the slide plate spring (B-20), one or two plates are bent to retain its nature as a spring. Memorize their position.	T ↓ (B-14)-(S640)-(B-28) T ↓ (B-16)-(S640)-(B-18) T ↓ (B-21)-(S640)-(B-18) T ↓ (B-23)-(S640)-(B24)	

ASSEMBLING PROCEDURES

Seq.	Parts, Sub-Ass'y to be disassembled (Fig. No.)	Description	Adhesive Lubricant	Exclusive Tools
1	FC slide ring (B-28) Main tube (B-27) 1.7ø x 1.4 plus pan head screw (B-26) Cam ring (B-25) Cam holding ring (B-24) 1.7ø x 2.5 plus pan head screw (B-23) Helicoid female (B-21) Slide plate spring (B-20) Slide plate (B-19) RC slide ring (B-18) RC collar set screw (B-17) FC collar (B-15) FC collar set screw (B-14)	1. When about one-thire of the long groove of the RC slide ring (B-18) has sidappeared, insert the slide plate spring (B-20) and the slide plate (B-19). Here, take note of the correct position of the curved spring. 2. As regards the greasing of the inner surface of the FC slide ring (B-28), the place where the slide plate (B-19) slides will be coated with grease as wide as about 10mm only in the direction of the optical axis. 3. By further bending the curve of the slide plate, the zoom torque may be made greater. 4. Do not apply a large quantity of adhesive to the FC collar set screw (B-14). If the adhesive comes over the inner surface, the movement of the RC slide ring will not become smooth. 5. Assemble each component as indicated in the figure. Align the assembling mark (concave). 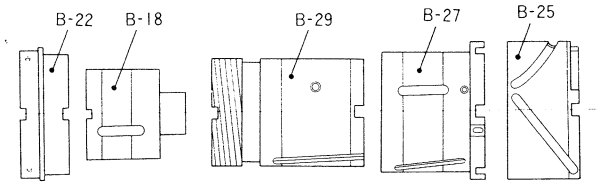 Fig.-8 6. Screw in the helicoid male on the helicoid female (B-22) to its mark-off line. When the helicoid male is screwed in to the dimension indicated in the figure (4.0 ±0.2mm), the concaves must be aligned with each other. 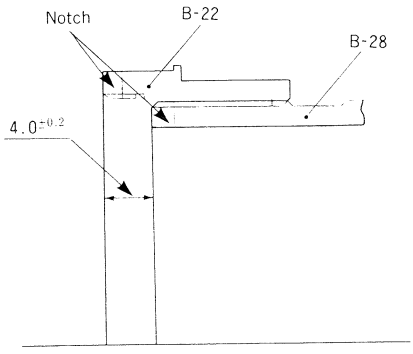 Fig.-9	14-(S640)-28 16-(S640)-18 21-(S640)-18 23-(S640)-24 19-Ⓖ-28 22-Ⓖ-28 25-Ⓖ-27 27-Ⓖ-28	

ASSEMBLING PROCEDURES

Seq.	Parts, Sub-Ass'y to be assembled (Fig. No.)	Description	Adhesive Lubricant	Exclusive Tools
2	Blade case sub-assy (A-47) 1.7ø x 3.0 plus pan head screw (A-46) Turning ring spring (A-45) Turning ring arm (A-44) 1.4ø x 1.4 plus counter sunk screw (A-43)	1. If the blade case sub-assembly (A-47) is put back into position according to the mark-off line drawn when it was disassembled, there is practically no need to adjust the aperture. 2. The plus pan head screw (A-46) must be locked with screws after an adjustment of the aperture. 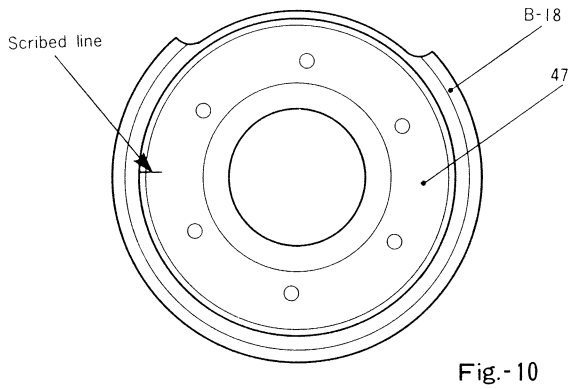 Fig.-10	46-(S640)-47 43-(S640)-44	
3	Regulation washer (A-42) Turning ring stopper (A-41) 1.7ø x 2.5 plus pan head screw (A-40) Outside tube (A-39) 1.7ø x 2.5 plus pan head screw (A-38)	1. Lock the turning ring stopper (A-41) with screws when it hits the protrusion of the inner surface of the slide tube (A-39). 2. Push the slide tube toward the main tube (B-27) and fix it with the plus pan head screw (A-38). Make sure that the regulation washer (A-42) does not have any play.	40-(S640)-39 38-(S640)-39	

ASSEMBLING PROCEDURES

Seq.	Parts, Sub-Ass'y to be disassembled (Fig. No.)	Description	Adhesive Lubricant	Exclusive Tools
4	Click spring stud (A-22) Click spring (A-21) 2.0ø steel ball (A-20)	Do not try to forcibly bend the click spring (A-21) with unreasonable force. 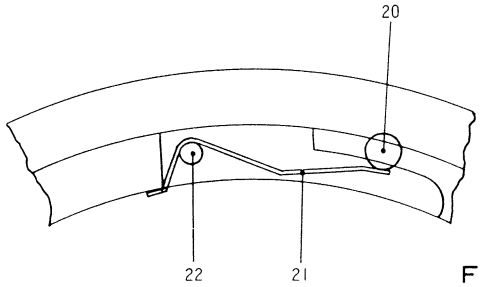 Fig.-11	20-Ⓜ-39	
5	AE lock lever (A-19) AE lock lever shaft (A-18) AE lock lever spring (A-17) Aperture ring (A-16)	Apply a verty small quantity or Moricoat to the inner surface of the aperture ring (A-16) and align the click groove with the 2.0 ø steel ball (A-20) before it is engaged with the outside tube (A-39). Check the click and the AE lock. 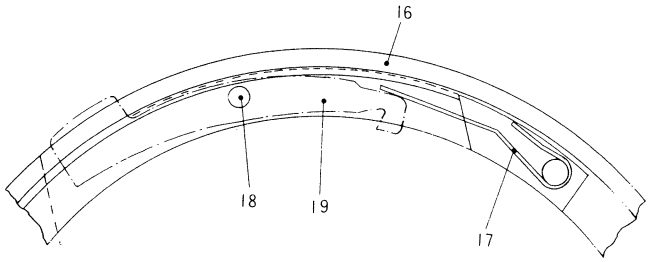 Fig.-12	16-Ⓜ-39	
6	Lens mount sub-assy (A-15) Main spring stud (A-14) 1.4ø x 2.0 plus pan head screw (A-13) Main spring (A-12) Connecting ring sub-assy (A-11) 1.6ø stainless steel ball (A-10)	1. Make sure that the connecting lever (B-10) is not bent and deformed. (1) Bending toward the outer surface ... engagement of the connecting lever and the turning ring arm (A-44) (wide). (2) Bending toward the inner surface ... engagement of the connecting lever and the RC-1 lens sub-assembly (A-5) (wide).		

ASSEMBLING PROCEDURES

Seq.	Parts, Sub-Ass'y to be disassembled (Fig. No.)	Description	Adhesive Lubricant	Exclusive Tools
	Steel ball set ring (A-9) 1.7Ø x 5.0 plus counter sunk screw (A-8)	2. Make sure that there is no scratch at the point indicated by the arrow. If there is a scratch, replace it with a new one. 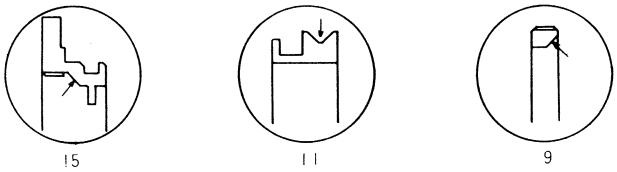 Fig.-13 3. When the stainless steel balls (A-10) are tightened with the steel ball set ring (A-9), there must remain a gap big enough for two or three balls. 4. The play for the connecting ring sub-assembly (A-11) must be less than 0.1 in each direction indicated by the arrow and must smoothly move when they are tightened with the steel ball set ring (A-9). If the steel ball set ring (A-9) is too strongly tightened, there will appear a scratch at the point indicated by the arrow in 2 above, and the action of the balls will not become smooth. 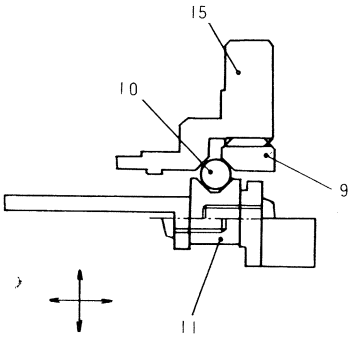 Fig.-14		

Seq.	Parts, Sub-Ass'y to be disassembled (Fig. No.)	Description	Adhesive Lubricant	Exclusive Tools
		5. Apply the adhesive at three point on the surface of the circle.	9-(S640)-15 14-(S640)-15 12-Ⓜ-11	

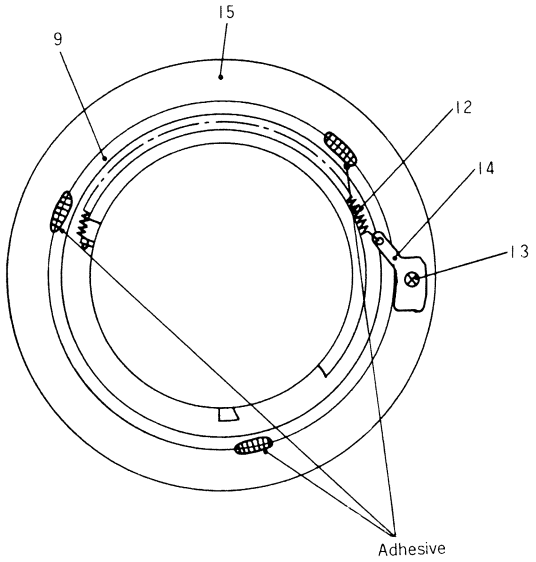

Fig.-15

6. Put back the lens mount sub-assembly (A-15) into position where the convex of the connecting ring (B-13) is engaged with that of the inner side of the aperture ring (A-16) and the 3mm-wide groove of the mount is aligned with the red index mark of the index ring (A-37).

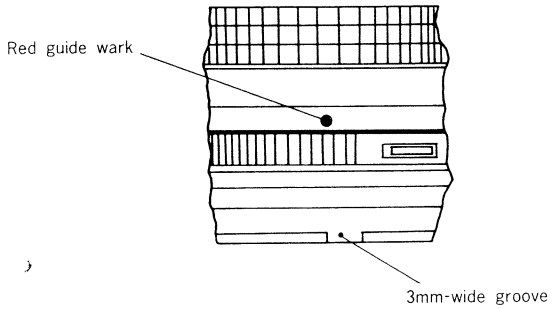

Fig.-16

7. When the lens mount sub-assembly (A-15) is put into position with the plus counter sunk screw (A-8), there are cases where the action of the aperture ring (A-16) becomes heavy. Here, the position where the index ring (A-37) is place is improper.

ASSEMBLING PROCEDURES

Seq.	Parts, Sub-Ass'y to be disassembled (Fig. No.)	Description	Adhesive Lubricant	Exclusive Tools
7	Adjustment of the aperture	1. Slide the index ring (A-37) forward and set the zoom ring to "wide", and the long groove will appear and the plus pan head screw (A-46) which tightens the blade case sub-assembly (A-47) will make its appearance. 2. Loosen the screws and turn the blade case sub-assembly (A-47) for an adjustment with the lens set to "wide". Clockwise turning ..... The aperture becomes large. Counterclockwise turning ..... The aperture becomes small. 3. The aperture range is shown below. F: 5.6 — f=70: 13.78 ~ 10.94Ø; f=35: 9.93 ~ 7.89Ø F: 16 — f=70: 4.77 ~ 3.79Ø; f=35: 3.45 ~ 2.74Ø 4. Check at two points: f = 70, f = 35. 5. After the aperture is adjusted, lock the plus pan head screw (A-46).	46-(S640)-(B-28)	
8	Index ring (A-37) Index ring set screw (A-36)	Make sure that the index ring (A-37) does not jut out of the aperture ring slide surface of the outside tube (A-39).	36-(S640)-37	
9	Zoom ring (A-35) 1.7Ø x 3.0 plus pan head screw (A-34) Zoom leather (A-33)	Lock the plus pan head screw (A-34) so that it may not jut too much out of the surface of the zoom ring (A-35). There are cases where the zoom leather (A-33) changes as time goes by.	34-(S640)-35	

Seq.	Parts, Sub-Ass'y to be disassembled (Fig. No.)	Description	Adhesive Lubricant	Exclusive Tools
10	Focusing stopper screw (A-32) Infrared ring (A-31) 1.7ø x 1.8 plus pan head screw (A-30)	Before the focusing stopper screw (A-32) is locked, apply the adhesive to the screw, thich tends to become loose.	30-(S640)-31 32-(S640)-31	
11	Focusing stopper (A-29) 1.4ø x 1.4 plus pan head screw (A-28) Focusing ring (A-27) 1.7ø x 4.5 plus pan head screw (A-26)	1. Put back the focusing ring (A-27) into position with the lens barrel set to f = 70. Tighten the screws while taking note of the mark-off lines drawn when the ring was disassembled. 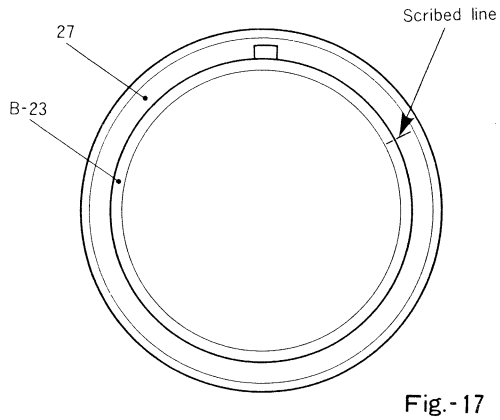 Fig.-17 2. Make sure that the focusing stopper (A-29) hits the protrusion of the focusing ring (A-27) before it is tightened with screws, so that the stopper may not be position at a slant. 3. Temporarily set the plus pan head screw (A-26) until an adjustment of FC is completed.	28-(S640)-29	
12	RC ring spacer (A-25) RC-2 lens sub-assy (A-24) Set ring (A-23)	A universal wrench may be used for the RC-2 lens sub-assembly (A-24). As the set ring (A-23) is made of resin, it is advisable to use sheet of flat rubber or something alike.		

ASSEMBLING PROCEDURES

Seq.	Parts, Sub-Ass'y to be disassembled (Fig. No.)	Description	Adhesive Lubricant	Exclusive Tools
13	Covered ring (A-7) Covered ring set screw (A-6)			
14	RC-1 lens sub-assy (A-5) FC lens sub-assy (A-4)			
15	*f* C adjustment	If the focus ring (A-27) is aligned with the helicoid female (B-25) and fixed according to the mark-off line drawn when they were disassembled, the FC precision will be restored. Make an adjustment in the following procedure. 1. Mount the lens on the camera and set it to *f* = 35. 2. Loosen the plus pan head screw (A-26) which tightens the focusing ring. Using a collimator or watching the image at infinity, hold the focusing ring tight and turn it till the best focus is created or the image is aligned at infinity. 3. In this condition, set the zoom lens to *f* = 70 and check to see if the best focus is created or the image is aligned at infinity. If infinity is out of position, move the FC lens sub-assembly for an adjustment. 4. Repeat the actions mentioned in 2 and 3, above. The way in which the image is visible at *f* = 35 and that of *f* = 70 becomes the same, tighten the focusring and the helicoid female.	26-(S640)-27	

ASSEMBLING PROCEDURES

Seq.	Parts, Sub-Ass'y to be disassembled (Fig. No.)	Description	Solvent	Exclusive Tools
16	*f f* adjustment	1. When the lens system and the zoom system have been disassembled, make sure that the quanity is checked before the *f f* adjustment washer is put into position. Also check the *f f* , regardless of an exchange of parts. 2. The specifications of *f f* are given below. *f* = 70 *f* = 50 *f* = 35 40.54 ±0.05mm		
17	Front tube (A-3) 1.7Ø x 2.0 round head screw (A-2) Focus ring leather (A-1)	1. Tighten the front tube (A-3) with a sheet of flat rubber or something alike. 2. Make sure that Sundine does not jut too much out of the round head screw (A-2). Sundine sometimes affects the focusing ring as time goes by.		

Date	10 April 1982
No.	35∿70/4-1

Parts Change Notice
(部品変更連絡票)

Model No. 製番	3555	① New Parts, (新設)	2 Disused, (廃止)	3 Changed (変更)	八王子 / 本社
Parts No. 部番	07115				

担当: 光学営技 57.4.12 横山(株) / 営技部 57.4.12 和田(株)

Rectification . Repair to be made :
(改修、修理方法)

1. Purpose: Bound prevention of diaphragm blade (when in combination with FTA.T_3).
2. Details:

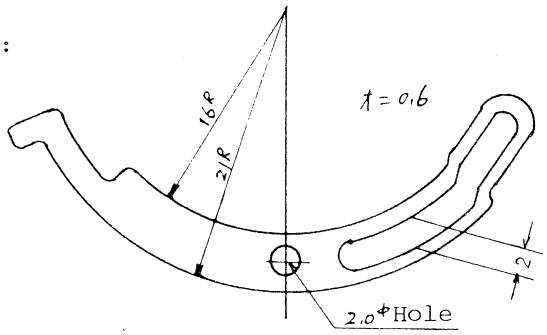

* For 2φ opening, use 07116, and for 2mm channel, use 07117 and 07118.
* Being the bound preventive parts, never use except for repair of the bound of diaphragm blade.

3. Name: Bound preventive plate
4. Miscellaneous: Scope of supply - Temporary parts for prevention of bound.

---

1. 目的 : 絞り羽根のバウンド防止 (FTA.T3と組合せ時)
2. 内容

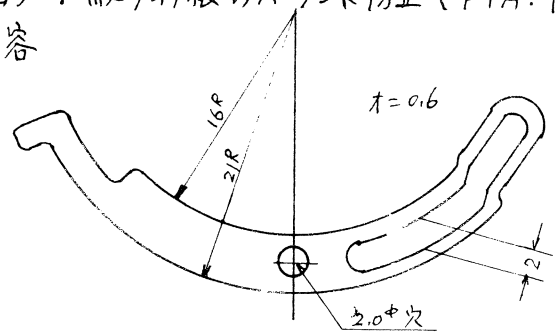

※ 2φ穴には07116を使用し 2mm巾溝は07117, 07118を使用する。
※ バウンド防止用部品なので絞り羽根バウンド修理以外は使用せぬこと。

3 名称 : バウンド防止板
4. その他: 支給対象 --- バウンド防止用の臨時部品

No.	35∿70/4-1	Related Change Notice and Parts No. (関連変更連絡票No及び部番) 35∿70/4-2 07116, 35∿70/4-4 07118 35∿70/4-3 07117
Serial No. (整理番号)		
Parts No. (部番)	07115 −△	Countermeasures to be taken: (処置)
Parts Illustrated (部品図) t=0.6		1. Old New Parts Interchangeability: (新・旧部品の互換性) YES. NO. 2. Additional Processing on to OId Parts. (旧部品への追加工) YES. (Parts No.) NO. 3. Remarks. (注記) 4. Price : FOB Japan

53. 9. 3,000

Date	10 Apr. 1982
No.	35∿70/4-2

Parts Change Notice
(部品変更連絡票)

Model No. 製番	3555	① New Parts, (新設)	2 Disused, (廃止)	3 Changed (変更)	八王子 / 本社
Parts No. 部番	07116				

光学営技 57.4.12 横山(製)　担当 営技部 57.4.12 太田(耕)

Rectification . Repair to be made :
(改修、修理方法)

1. Purpose: Bound prevention of diaphragm blade (when in combination with FTA.T3).

2. Details: 1.4φ Screw

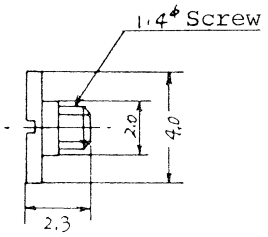

Use in the 2φ opening of 07115.

3. Name: Bound preventive plate shaft.

4. Miscellaneous: Scope of supply - Temporary parts for prevention of bound.

---

1. 目的：絞り羽根のバウンド防止（FTA、T3と組合せ時）

2. 内容：

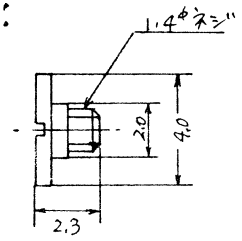

※ 07115の2φ穴部に使用

3. 名称：バウンド防止板軸

4. その他：支給対象 --- バウンド防止用の臨時部品

No.	35∿70/4-2
Serial No. (整理番号)	
Parts No. (部番)	07116 —△

Related Change Notice and Parts No.
(関連変更連絡票No及び部番)
35∿70/4-1 07115　35∿70/4-4 07118
35∿70/4-3 07117

Parts Illustrated
(部品図)

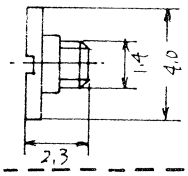

Countermeasures to be taken: (処置)

1. Old New Parts Interchangeability: (新・旧部品の互換性)
   YES.　NO.
2. Additional Processing on to OId Parts. (旧部品への追加工)
   YES. (Parts No.　　) NO.
3. Remarks. (注記)
4. Price : FOB Japan

Date	10 Apr. 1982
No.	35∿70/4-3

Parts Change Notice
(部品変更連絡票)

Model No. 製番	3555	① New Parts, (新設)	2 Disused, (廃止)	3 Changed (変更)	八王子	担当
Parts No. 部番	07117				本社	光学営技 57.4.12 横山 / 営技部 57.4.12 丸田

Rectification . Repair to be made :
(改修、修理方法)

1. Purpose: Bound prevention of diaphragm blade (when in combination with FTA.T3).

2. Details:

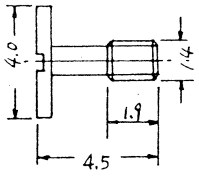

Use in 07115 2mm channel, with 07118 used simultaneously.

3. Name: Bound preventive plate cam shaft.

4. Miscellaneous: Scope of supply - Temporary parts for prevention of bound.

---

1. 目的：絞り羽根のバウンド防止用（FTA.T3と組合せ時）

2. 内容

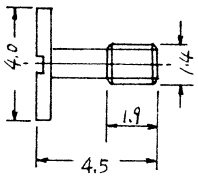

07115の2mm巾溝部に使用し
07118も同時使用

3. 名称：バウンド防止板カム軸

4. その他：支給対象 --- バウンド防止用の臨時部品

No.	35∿70/4-4
Serial No. (整理番号)	
Parts No. (部番)	07117 —△

Parts Illustrated (部品図)

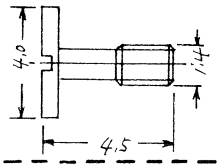

Related Change Notice and Parts No.
(関連変更連絡票No及び部番)

35∿70/4-1 07115 35∿70/4-4 07118
35∿70/4-2 07116

Countermeasures to be taken: (処置)

1. Old New Parts Interchangeability: (新・旧部品の互換性)
   YES. NO
2. Additional Processing on to OId Parts. (旧部品への追加工)
   YES. (Parts No.) NO.
3. Remarks. (注記)
4. Price : FOB Japan

53. 9. 3,000

Date	10 Apr. 1982
No.	35∿70/4-4

Parts Change Notice
(部品変更連絡票)

Model No. 製番	3555	① New Parts, (新設)	2 Disused, (廃止)	3 Changed (変更)	八王子 / 本社	光学営技 57.4.12 横山 / 担当 営技部 57.4.12 太田
Parts No. 部番	07118					

Rectification . Repair to be made :
(改修、修理方法)

1. Purpose: Bound prevention of diaphragm blade (when in combination with FTA.T3).

2. Details:

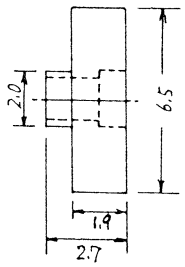

Use in 07115 2mm channel, and be fixed with 07117.

3. Name: Collar.

4. Miscellaneous: Scope of supply - Temporary parts for prevention of bound.

---

1. 目的：絞り羽根のバウンド防止用（FTA、T3と組合せ時）

2. 内容

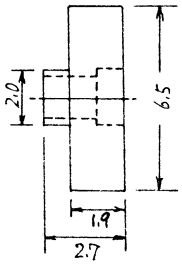

07115の2mm巾溝部に使用し07117で固定する。

3. 名称：カラー

4. その他：支給対象 --- バウンド防止用の臨時部品

No.	35∿70/4-4
Serial No. (整理番号)	
Parts No. (部番)	07118 −△
Parts Illustrated (部品図)	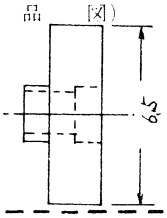

Related Change Notice and Parts No.
(関連変更連絡票No及び部番)
35∿70/4-1 07115 35∿70/4-3 07117
35∿70/4-2 07116

Countermeasures to be taken: (処置)
1. Old New Parts Interchangeability: (新・旧部品の互換性)
YES. NO.
2. Additional Processing on to OId Parts. (旧部品への追加工)
YES. (Parts No.) NO.
3. Remarks. (注記)
4. Price : FOB Japan

Date	25.12.84
No.	35∿70/4-5

Parts Change Notice
(部品変更連絡票)

Model No. 製番	3555	① New Parts, (新設)	2 Disused, (廃止)	3 Changed (変更)	八王子	関 59.12.25 / 59.12.25 本田耕
Parts No. 部番	07209				本社	担当

Rectification . Repair to be made :
(改修、修理方法)

1. Purpose: Improvement of the Zoom sub-assy fitting yield strength.
2. Details: Change of the Zoom sub-assy fitting screw.

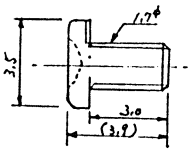

(Old) A-38 61425 1.5φ×2.5 Pan head set screw - Not used.

(New) A-38 07209 Special set screw - New parts.

3. Remarks: (1) 3325 (BTA 50/1.8) - Common with 07209.

(2) Parts Index and Disassembly List be corrected accordingly.

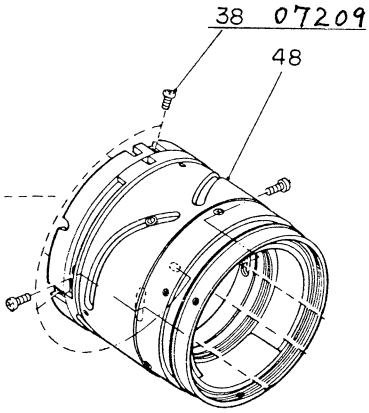

1. 目的：ズーム部組取付け耐力の向上
2. 内容：ズーム部組取付けネジの変更

(旧) A-38 61425 1.7φ×2.5 ナベ小ネジ
⇩
(新) A-38 07209 特殊押えネジ

3. その他
(1) 3325 (BTA, 50/1.8) - 07209 と共通。
(2) 部品インデックス及び分解図リストも同時変更のこと。

No.	35∿70/4-5	Related Change Notice and Parts No. (関連変更連絡票No.及び部番)
Serial No. (整理番号)	4A	
Parts No. (部番)	07209 −△	Countermeasures to be taken: (処置)
Parts Illustrated (部品図)	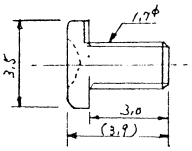	1. Old New Parts Interchangeability: (新・旧部品の互換性) YES. (NO.) 2. Additional Processing on to Old Parts. (旧部品への追加工) YES. (Parts No.) (NO.) 3. Remarks. (注記) 4. Price : FOB Japan

UC ZOOM HEXANON AR

45-100 mm F3.5 (Automatic)

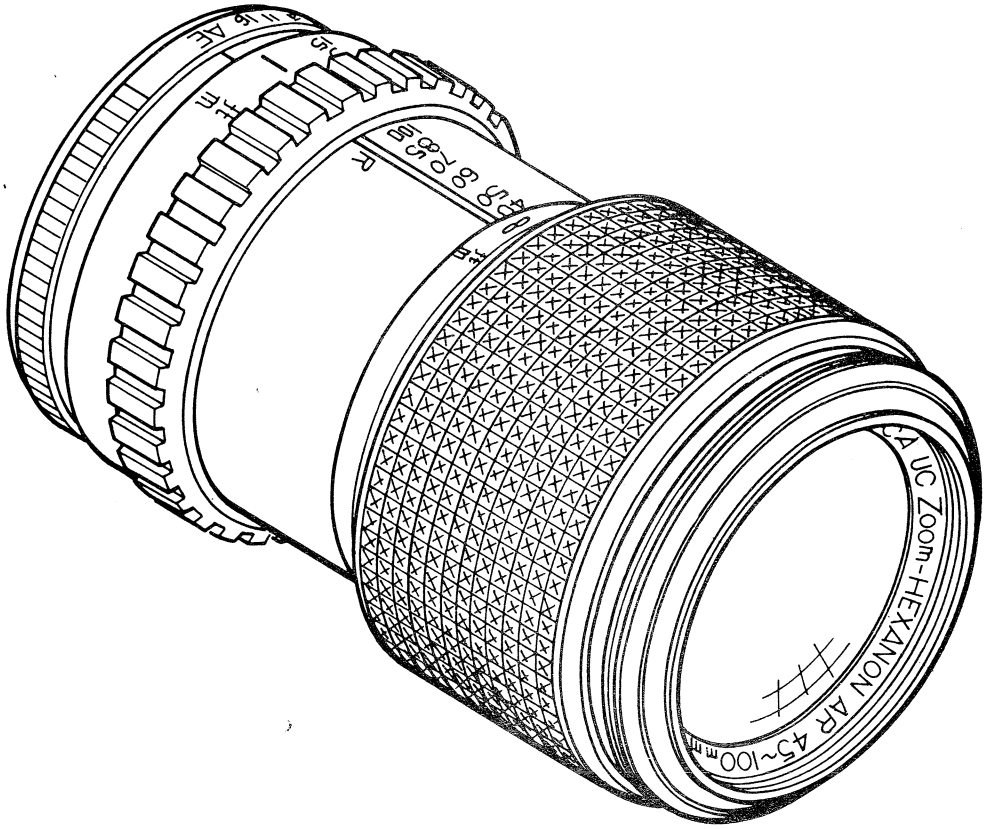

UC ZOOM HEXANON AR
45-100 mm F3.5 (Automatic)

MODEL No. 3597

1	2	3	4	5
Fig. No.	Parts No. or Sub-assembly	部品・部組名称	Parts name or Sub-assembly name	Note
A-1	501	レンズキャップ部組	Lens cap sub-assy	
	X 07501	レンズキャップ	Lens cap	
	X 07502	レンズキャップバネ	Lens cap spring	
	X 07503	銘 板	Name plate	
A-2	16285	1.4φ×2.0剣先ネジ	1.4φ×2.0 Round head screw	[S640]-07311
A-3	311	前筒部組	Front tube sub-assy	
	X 07311	前 筒	Front tube	
	X 07292	テレンプ D	Lining D	[S640]-07311
A-4	531	フード部組	Lense hood sub-assy	
	X 07531	フード	Lense hood	
	X 07532	テレンプ A	Lining A	[S640]-07531
A-5	701	前群レンズ部組	Front lens sub-assy	
	X 07901	第1レンズ	No.1 lens	
	X 07902	第2レンズ	No.2 lens	
	X 07903	第3レンズ	No.3 lens	
	X 07951	彫刻リング	Engraved ring	[S640]-07952
	X 07952	前鏡枠	Front lens barrel	[S640]-07952
	X 07953	第3レンズ押え枠	Set ring for No.3 lens	[S640]-07952
A-6	07253	反射防止枠	Tube for absorbed reflction	[S640]-07252
A-7	702	V_1 レンズ部組	V_1 Lens sub-assy	
	X 07904	V_1 第4レンズ	No. 4 lens of V_1	
	X 07905	V_1 第5レンズ	No. 5 lens of V_1	
	X 07906	V_1 第6レンズ	No. 6 lens of V_1	
	X 07961	中枠 A	Inside ring A	
	X 07962	4番玉押え	Set ring for No.4 lens	[S640]-07961
	X 07963	6番玉押え	Set ring for No.5 lens	[S640]-07961
A-8	07221	調整座金 a	Adjust spacer of a	
A-9	703	V_2 レンズ部組	V_2 Lens sub-assy	
	X 07907	V_2 第7レンズ	No. 7 lens of V_2	
	X 07971	中枠 B	Inside ring B	
	X 07972	7番玉押え	Set ring for No.7 lens	
A-10	07511	マウントキャップ	Mount cap	

UC ZOOM HEXANON AR
45-100 mm F3.5 (Automatic)

MODEL No. 3597

1	2	3	4	5
Fig. No.	Parts No. or Sub-assembly	部品・部組名称	Parts name or Sub-assembly name	Note
A-11	13133	1.2φ×1.4 皿小ネジ	1.2φ×1.4 Counter sunk screw	〔S640〕-07401
A-12	07403	化粧リング	Covered ring	
A-13	704	マスターレンズ部組	Master lens sub-assy	
	X 07908	第 8 レンズ	No. 8 lens	
	X 07909	第 9 レンズ	No. 9 lens	
	X 07910	第10レンズ	No.10 lens	
	X 07911	第11レンズ	No.11 lens	
	X 07981	後鏡枠	Rear lens Frame	
	X 07982	後玉押え	Set ring for rear lens	〔S640〕-07981
	X 07983	8 番玉押え	Set ring for No.8 lens	〔S640〕-07981
	X 07984	8・9 番間隔リング	Spacer ring for No.8 and No.9	
	X 07985	10・11番間隔リング	Spacer ring for No.10 and No.11	
A-14	07271	ズーム光皮	Zoom leather	
A-15	07263	ヘリコイド作動ピン	Helicoid working pin	Ⓜ-07267 〔S640〕-7262
A-16	61285	1.4φ×2.0 平小ネジ	1.4φ×2.0 Flat screw	〔S640〕-07201
A-17	261	ズームヘリコイド部組	Zoom Helicoid sub-assy	
	X 07261	ズームヘリコイド A	Zoom Helicoid A	Ⓖ-07261
	X 07262	ズームヘリコイド B	Zoom Helicoid B	Ⓖ-07261
A-18	16405	1.7φ×2.0剣先ネジ	1.7φ×2.0 Round head screw	〔S640〕-07254
A-19	07267	ズームリング	Zoom ring	Ⓜ-07263
A-20	63469	1.7φ×4.0 皿小ネジ	1.7φ×4.0 Counter sunk screw	〔S640〕-07203
A-21	401	マウント部組	Lens mount sub-assy	
	X 07401	マウント	Lens mount	
	X 07402	マウント制限ピン	Lens mount limitation pin	
A-22	07306	クリックバネ押え	Cap for click spring	〔S640〕-07301
A-23	07305	クリックバネ	Click spring	
A-24	51169	1.6φ 鋼球	1.6φ Steel ball	Ⓔ—07303 07304
A-25	07334	マニュアルストッパー止めネジ	Set screw for manual stopper	
A-26	07335	マニュアルストッパーバネ	Spring for manual stopper	
A-27	331	マニュアルストッパー部組	Manual stopper sub-assy	
	X 07331	マニュアルストッパー	Manual stopper	

UC ZOOM HEXANON AR
45-100 mm F3.5 (Automatic)

MODEL No. 3597

1	2	3	4	5
Fig. No.	Parts No. or Sub-assembly	部品・部組名称	Parts name or Sub-assembly name	Note
	X 07333	マニュアルストッパーバネ掛 A	Spring stud A for manual stopper	
A-28	07336	絞りリングストッパー	Diaphragm ring stopper	[S640]-07301
A-29	07374	AEロックレバー軸	Set screw for AE lock lever	
A-30	07326	AEロックバネ	Spring for AE lock lever	
A-31	323	AEロックレバー部組	AE lock lever sub-assy	
	X 07323	AEロックレバー	AE lock lever	
	X 07325	AEロックバネ掛	Spring stnd for AE lock lever	
A-32	321	AEロック釦部組	AE lock buttom sub-assy	
	X 07321	AEロック釦	AE lock buttom	
	X 07322	AEロック連動ピン	Connection pin for AE lock	
	202	ヘリコイド部組	Helicoid sub-assy	
A-(33)	X 07301	絞りリング	Diaphragm ring	Ⓔ-07203
A-(42)	X 07201	ヘリコイド雄	Helicoid male	Ⓖ
A-(67)	X 07202	ヘリコイド雌	Helicoid female	Ⓖ
A-(75)	X 07203	取付座	Outside tube	Ⓖ
A-34	07161	接続ネジ	Connection·set screw	Ⓜ-07210 [S640]-07154
A-35	63285	1.4φ×2.0 皿小ネジ	1.4φ×2.0 Counter sunk screw	[S640]-07203
A-36	07303	クリック板 A	Click plate A	Ⓔ-51169
A-37	63284	1.4φ×2.0 皿小ネジ	1.4φ×2.0 Counter sunk screw	[S640]-07203
A-38	07304	クリック板 B	Click plate B	Ⓔ-51169
A-39	65435	1.7φ×2.8 薄平小ネジ	1.7φ×2.8 Thin flat screw	[S640]-07203
A-40	07204	直進案内板	Guide plate for helicoid	Ⓖ-07201
A-41	07265	リング作動ピン A	Pin A for working ring	[S640]-07264
A-(42)	251	ズーム部組	Zoom sub-assy	
	X 07201	ヘリコイド雄	Helicoid male	Ⓖ
	X 07252	ズーム回転胴	Turning ring for zoom	Ⓖ
	X 07254	ズーム作動リング	Working ring for zoom	Ⓖ
	X 07255	ズーム案内枠 A	Guide pin A for zoom	Ⓖ
	X 07256	ズーム案内枠 B	Guide pin B for zoom	Ⓖ
	X 07275	V_1 連結ピン A	Connection pin A for V_1	Ⓖ
	X 07280	V_1 連結ピン F	Connection pin F for V_1	Ⓖ

UC ZOOM HEXANON AR
45-100 mm F3.5 (Automatic)

MODEL No. 3597

1	2	3	4	5
Fig. No.	Parts No. or Sub-assembly	部品・部組名称	Parts name or Sub-assembly name	Note
	X 07285	V_2連結ピン A	Connection pin A for V_2	
	X 07269	ズームストッパー	Zoom stopper	
	X 07270	ズームストッパービス	Screw for zoom stopper	[S640]-07201
	X 07272	ズーム摩擦抵抗体	Frictional resistor for zoom	
	X 07273	ズーム摩擦抵抗体バネ	Spring for frictional resistor	
	65404	1.7φ×2.0 薄平小ネジ	1.7φ×2.0 Thin flat screw	[S640]-07201
A-43	16285	1.4φ×2.0剣先ネジ	1.4φ×2.0 Round head screw	[S640]-07254
A-44	268	指標リング部組	Point ring sub-assy	
	X 07268	指標リング	Point ring	
	X 07291	テレンプ C	Lining C	[S640]-07268
A-45	07266	リング作動ピン B	Pin B for working ring	[S640]-07264
A-46	264	目盛リング部組	Scall ring sub-assy	
	X 07264	目盛リング	Scall ring	
	X 07290	テレンプ B	Lining B	[S640]-07264
A-47	65374	1.7φ×1.4薄平小ネジ	1.7φ×1.4 Thin flat screw	[S640]-07201
A-48	07151	中 胴	Inside tube	
A-49	16265	1.4φ×1.6剣先ネジ	1.4φ×1.6 Round head screw	[S640]-07151
A-50	101	羽根ケース部組	Blade case sub-assy	
	61295	1.4φ×2.2 平小ネジ	1.4φ×2.2 Flat screw	[S640]-07114
	X 07114	羽根押え板	Blade cover	
	X 07113	小座金	Washer	
	109	絞り羽根部組	Diaphragm blade sub-assy	
	X 07111	絞り羽根	Diaphragm blade	
	X 07112	羽根ダボ	Diaphragm blade dowell	
	61275	1.4φ×1.8 平小ネジ	1.4φ×1.8 Flat screw	[S640]-07101
	X 07116	バネ用柱	Spring stud screw	[S640]-07101
	X 07105	リング押え板	Set plate turning ring	
	X 07110	ベルクランクバネ	Spring for ball crank	
	X102	駆動リング部組	Turning ring sub-assy	
	X07102	駆動リング	Turning ring	
	X07103	駆動ピン A	Turning pin A	
	X07104	駆動ピン B	Turning pin B	
	X 07109	ベルクランク軸	Rotation shaft for bell crank	

UC ZOOM HEXANON AR
45-100 mm F3.5 (Automatic)

MODEL No. 3597

1	2	3	4	5
Fig. No.	Parts No. or Sub-assembly	部品・部組名称	Parts name or Sub-assembly name	Note
	X106	ベルクランク部組	Bell crank sub-assy	
	X 07106	ベルクランク	Bell crank	
	X 07107	ベルクランク軸	Bell crank pin	
	X 07101	羽根ケース	Blade case	
A-51	07108	ベルクランクローラー	Bell crank rollor	Ⓜ—07158, 07107
A-52	07159	作動バネ	Main spring	Ⓜ-07153
A-53	07162	作動バネ柱 A	Screw A for main spring	[S640]-07151
A-54	61285	1.4φ×2.0 平小ネジ	1.4φ×2.0 Flat screw	[S640]-07153
A-55	07158	溝カム	Grooved cam	Ⓜ-07108
A-56	07156	ボール押え A	Set ring A for ball	[S640]-07151
A-57	51169	1.6φ鋼球	1.6φ steel ball	
A-58	151	絞り作動リング部組	Working ring sub-assy	
	X 07153	絞り作動リング	Working ring for blade	
	X 07152	絞り作動レバー	Working lever for blade	Ⓜ-07153
	X 07154	作動レバーバネ	Spring for working lever	
	X 07155	作動レバービス	Screw for working lever	
	X 07160	作動バネ柱 A	Stud A for main spring	[S640]-07153
A-59	16425	1.7φ×2.5剣先ネジ	1.7φ×2.5 Round head screw	[S640]-07217
A-60	07206	ヘリコイド切替ボタン	Helicoid change button	
A-61	07217	フォーカスリング	Focus ring	
A-62	07208	切替レバー	Change lever	
A-63	07207	切替ガイドピン	Guide pin for change	[S640]-07208
A-64	07209	切替レバーバネ	Change lever spring	
A-65	16265	1.4φ×1.6剣先ネジ	1.4φ×1.6 Round head screw	[S640]-07217
A-66	07218	距離目盛リング	Distance scall ring	
A-68	16265	1.4φ×1.6剣先ネジ	1.4φ×1.6 Round head screw	[S640]-07203
A-69	205	ヘリコイド切替リング部組	Helicoid change ring sub-assy	
	X 07205	ヘリコイド切替リング	Helicoid change ring	
	X 07220	切替えリングストッパー	Change ring stopper	
	X 32060	皿リベット1.8×1×2	1.8×1×2 Counter sunk rivet	
A-70	07215	ボール押え枠 B	Set ring B for ball	[S640]-07203

UC ZOOM HEXANON AR
45-100 mm F3.5 (Automatic)

MODEL No. 3597

1	2	3	4	5
Fig. No.	Parts No. or Sub-assembly	部品・部組名称	Parts name or Sub-assembly name	Note
A-71	51169	1.6φ鋼球	1.6φ Steel ball	
A-72	203	接続リング部組	Connection ring sub-assy	
	✕ 07210	絞り接続リング	Connection ring for diaphragm	
	✕ 07212	マニュアル制限板 A	Limitation plate A	
	61275	1.4φ×1.8 平小ネジ	1.4φ×1.8 Flat screw	〔S640〕-07210
A-73	07234	本体接続レバー止めネジ	Set screw for connection lever	〔S640〕-07210
A-74	07231	本体接続板 A	Connection plate A	
	07232	本体接続板 B	Connection plate B	
	07233	本体接続板 C	Connection plate C	

UC ZOOM HEXANON AR 45-100 mm F3.5 (Automatic)

A

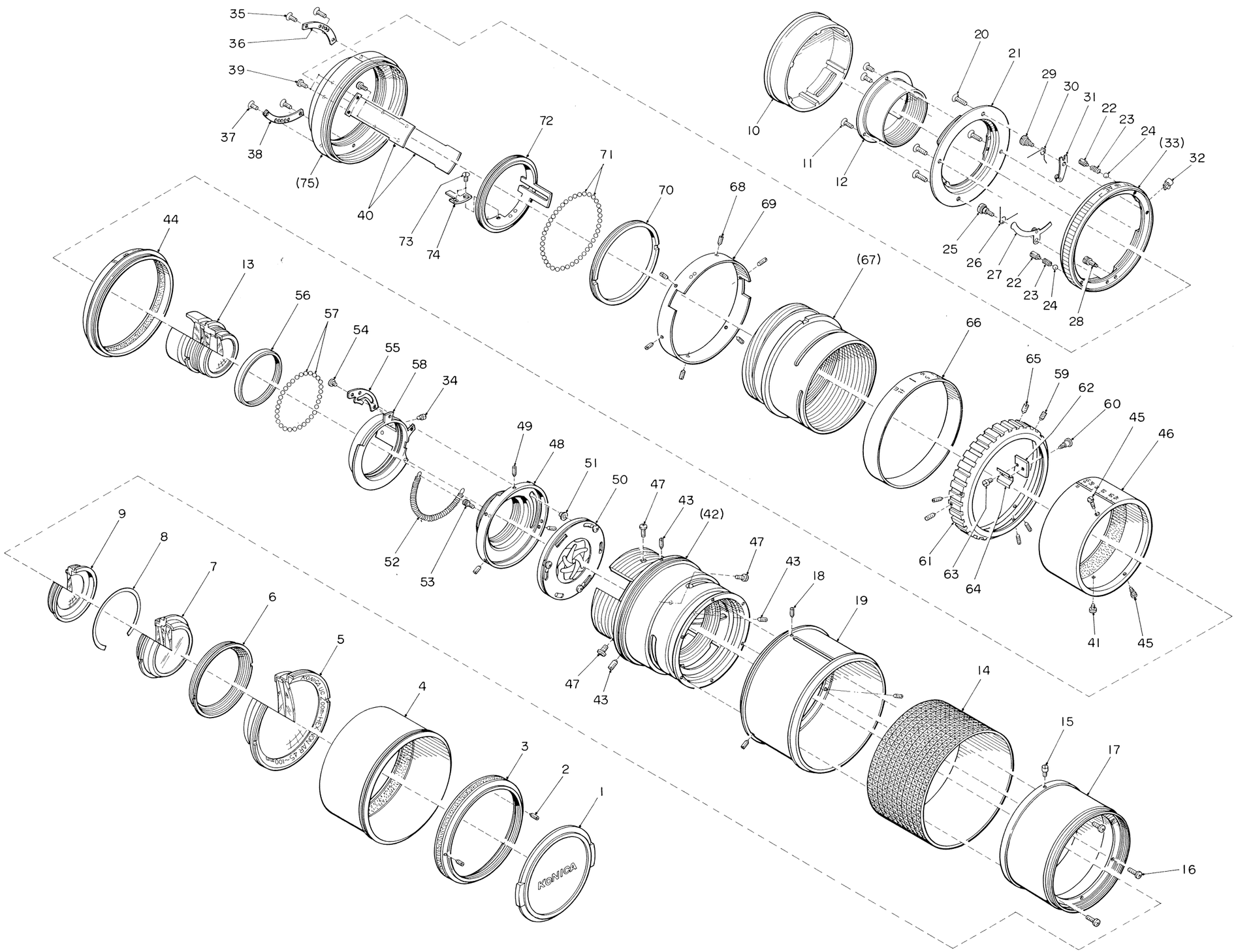

UC ZOOM HEXANON AR 45-100 mm F3.5 (Automatic)

B

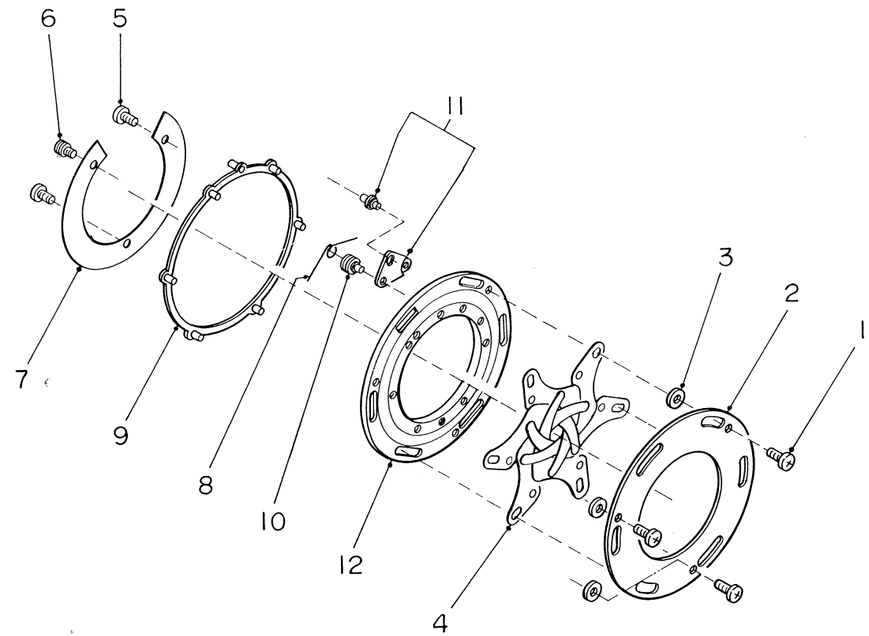

101

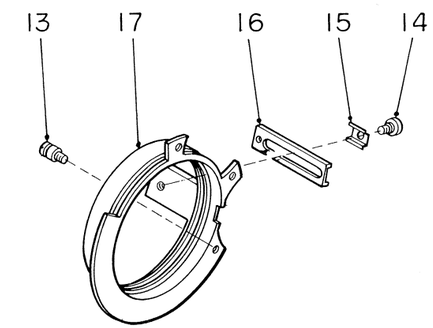

151

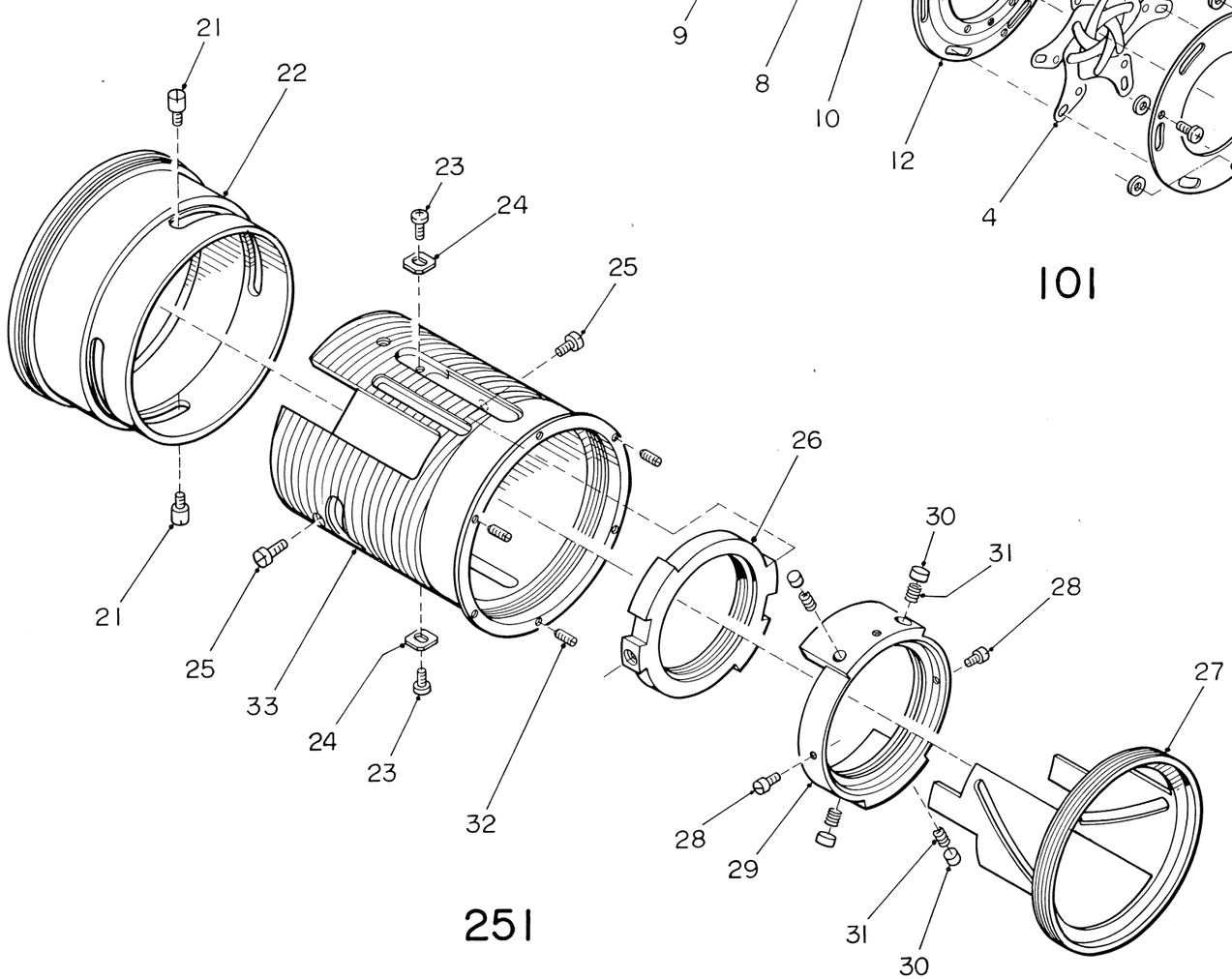

251

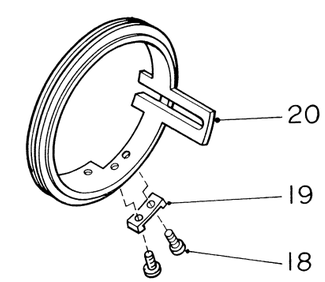

203

UC ZOOM HEXANON AR
45-100 mm F3.5 (Automatic)

MODEL NO.3597

1	2	3	4	5
Fig. No.	Parts No. or Sub-assembly	部品・部組名称	Parts name or Sub-assembly name	Note
	101	羽根ケース部組	Blabe case sub-assy	
B-1	61295	1.4φ×2.2平小ネジ	1.4φ×2.2 Flat acrew	〔S640〕-07114
B-2	X 07114	羽根押え板	Blade cover	
B-3	X 07113	小座金	Washer	
B-4	109	絞り羽根部組	Diaphragm blade sub-assy	
	X 07111	絞り羽根	Diaphragm blade	
	X 07112	羽根ダボ	Diaphragm blabe dowell	
B-5	61275	1.4φ×1.8平小ネジ	1.4φ×1.8 Flat screw	〔S640〕-07101
B-6	X 07116	バネ用柱	Spring stud screw	〔S640〕-07101
B-7	X 07105	リング押え板	Set plate for ring	
B-8	X 07110	ベルクランクバネ	Spring for bell crank	
B-9	X 102	駆動リング部組	Turning ring sub-assy	
	X 07102	駆動リング	Turning ring	
	X 07103	駆動ピンA	Turning pin A	
	X 07104	駆動ピンB	Turning ring pin B	
B-10	07109	ベルクランク軸	Rotation shaft for bell crank	
B-11	106	ベルクランク部組	Bell crank sub-assy	
	X 07106	ベルクランク	Bell crank	
	X 07107	ベルクランク軸	Bell crank pin	
B-12	X 07101	羽根ケース	Blade case	
	151	絞り作動リング部組	Working ring sub-assy	
B-13	X 07160	作動バネ柱A	Stud A for main spring	
B-14	X 07155	作動レバービス	Screw for working lever	
B-15	X 07154	作動レバーバネ	Spring for working lever	
B-16	X 07152	絞り作動レバー	Working lever for blabe	Ⓜ-07153
B-17	X 07153	絞り作動リング	Working ring for blade	
	203	接続リング部組	Connection ring sub-assy	
B-18	61275	1.4φ×1.8平小ネジ	1.4φ×1.8 Flat screw	〔S640〕-07210
B-19	X 07212	マニュアル制限板A	Limitation plate A	
B-20	X 07210	絞り接続リング	Connection ring for diaphragm	
	251	ズーム部組	Zoom sub-assy	
B-21	X 07275	V_1 連結ピンA	Connection pin A for V_1	Ⓖ-07201
B-22	X 07254	ズーム作動リング	Working ring for zoom	Ⓖ-07201
B-23	65405	1.7φ×2.0薄平小ネジ	1.7φ×2.0 Thin flat screw	〔S640〕-07201
B-24	X 07269	ズームストッパー	Zoom stopper	

UC ZOOM HEXANON AR
45-100 mm F3.5 (Automatic)

MODEL No. 3597

1	2	3	4	5
Fig. No.	Parts No. or Sub-assembly	部品・部組名称	Parts name or Sub-assembly name	Note
B-25	X 07285	V_2 連結ピンA	Connection pin A for V_2	Ⓖ-07201
B-26	X 07256	ズーム案内枠B	Guide pin B for zoom	Ⓖ-07201
B-27	X 07252	ズーム回転胴	Turning ring for zoom	Ⓖ-07201
B-28	X 07280	V_1 連結ピン F	Connection pin F for V_1	Ⓖ-07252
B-29	X 07255	ズーム案内枠 A	Guide pin A for zoom	Ⓖ-07201
B-30	X 07272	ズーム摩擦抵抗体	Frictional resistor for zoom	
B-31	X 07273	ズーム摩擦抵抗体バネ	Spring for frictional resistor	
B-32	X 07270	ズームストッパービス	Screw for zoom stopper	[S640]-07201
B-33	X 07201	ヘリコイド雄	Helicoid male	

Seq.	Parts, Sub-Ass'y to be disassembled (Fig. No.)	Description	Solvent	Exclusive Tools
6	Round head screw (A-8) Zoom ring (A-19)	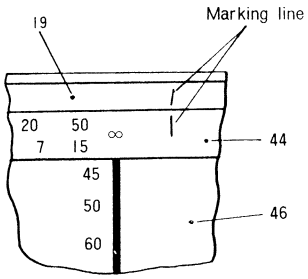 Confirm assembly position of zoom ring (A-19) and index ring sub-assy. (A-44) by pencil etc. for easy FC regulation at the time of assembly.	T ↓ 18-(S640)-19	
7	Counter sunk screw (A-20) Mount sub-assy. (A-21)	Where washers are employed between mount sub-assy. (A-20) and outside tube (A-75). record where each washer was built in.	T ↓ 20-(S640)-75	
8	Cap for click spring (A-22) Click spring (A-23) 1.6ø steel ball (A-24) Set screw for manual stopper (A-25) Spring for manual stopper (A-26) Manual stopper sub-assy. (A-27) Stopper for diaphragm ring (A-28) Set screw for AE lock lever (A-29) AE lock spring (A-30) AE lock lever sub-assy. (A-31) AE lock button (A-32) Diaphragm ring (A-33)	Even after removal of cap for click spring (A-22), do not immediately remove click spring (A-23) and steel ball (A-24), but instead remove it by pushing steel ball with screwdriver after removal of diaphragm ring (A-33). (Mount side is kept downward.)	T ↓ 22-(S640)-33	

Seq.	Parts, Sub-Ass'y to be disassembled (Fig. No.)	Description	Solvent	Exclusive Tools
9	Counter sunk screw (A-53, 37) Click plate A (A-36) Click plate B (A-38)	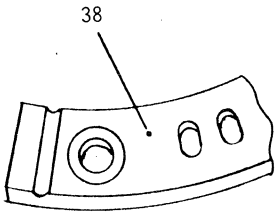 Except for change of click plate, removal is not necessary. Sometimes left side edge surface of click plate B (A-38) is restriked as per drawing. This is for regulating AE lock rattling by the edge surface and tip of stopper (A-28).		
10	Main pin A for ring (A-41) Connecting screw (A-34) Flat thin screw (A-39) Guide plate for helicoid (A-40)	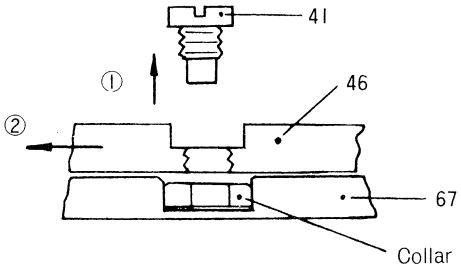 1. Remove main pin A for ring (A-41). 2. Remove dial ring sub-assy. (A-46) forwardly. Where collar is employed in groove of helicoid female groove of helicoid female (A-67), remove it. 3. Mate focus ring (A-61) with RECESS, then connecting ring (A-34) jumps out as shown in drawing. Therefore remove (A-34) by finger tips applying from inside to connecting lever (to avoid (B-16) being bent to inside). Return focus ring to normal position. 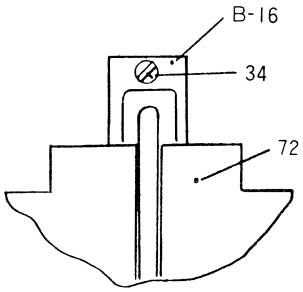 	T ↓ 41-(S640)-46 T ↓ 34-(S640) -(B-16)	

Seq.	Parts, Sub-Ass'y to be disassembled (Fig. No.)	Description	Solvent	Exclusive Tools
		4. Remove flat thin screw (A-39). One screw out of four is of short length (correspond to spot faced position out of four set holes of outside tube (A-67). If long screw is used in this position by mistake, RECESS lock becomes impossible (since screw tip meets helicoid female). 5. By holding and turning zoom sub-assy. (A-42) and focus ring (A-61) with mount side down, zoom sub-assy. side and outside tube (A-75) side are separated. Record position of separation.	T ↓ 39-(S640)-75	
11-1	Round head screw (A-43) Index ring sub-assy. (A-44) Main pin B for spring (A-45) Dial ring sub-assy. (A-46)	At removed of index ring sub-assy and dial ring sub-assy. (A-46) altogether, take care not make inside telemp contact helicoid male (B-33) (for protection of oil adhesion).	T ↓ 43-(S640) -(B-22)	
11-2	Flat thin screw (A-47) Inside tube group (A-48) Zoom sub-assy. (A-42)	1. Before separating inside tube group and zoom sub-assy. (A-42), confirm relative assembly position. 2. When inside tube group is removed out of zoom sub-assy. (A-42), screw in master lens sub-assy. (A-13) into inside tube (A-48), hold (A-13) and then remove it for easy removal.	T ↓ 47-(S640) -(B-33)	

Do not disassemble the zoom sub-assy. (A-42) as a rule.

When replacing the zoom sub-assy.(A-42), it is suggested to do so together with the helicoid sub-assy. (A-43, A-67, and A-75) as a complete set.

Seq.	Parts, Sub-Ass'y to be disassembled (Fig. No.)	Description	Solvent	Exclusive Tools
11-3	Round head screw (A-49) Blade case sub-assy. (A-50) Bell crank roller (A-51)	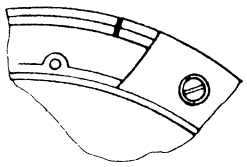 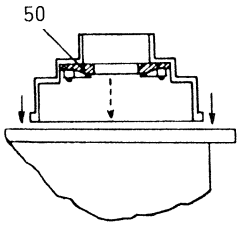 Before disassembly 1. Marking line relative position of blade case sub-assy. (A-50) and inside tube on each part. 2. Take care not to lose bell crank roller (A-51) since it falls down at removal of blade case sub-assy.(A-50). 3. Remove (A-50) by giving a shock in arrowed direction while holding inside tube (A-48). Take care strong shock or holding main ring for diaphragm (A-58) may cause flaws at slide position with steel ball resulting in non-smoothness of (A-58) operation.	[T] ↓ 49-(S640)-48	
11-4	Main spring (A-52) Stud for main spring (A-53) Flat screw (A-54) Grooved cam (A-55)	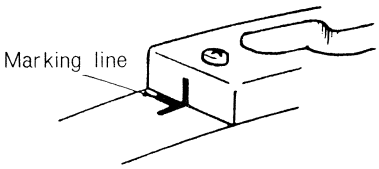 1. Marking line on each part relative position of grooved cam (A-55) and main ring (A-58) for easy assembly. 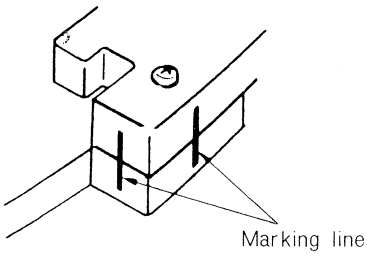 2. Do not excessively exert stress downwardly when releasing flat screw (A-54).	[T] ↓ 54-(S640)-58	

Seq.	Parts, Sub-Ass'y to be disassembled (Fig. No.)	Description	Solvent	Exclusive Tools
11-5	Set ring A for ball (A-56) 1.6 ø steel ball (A-57) Main ring for diaphragm sub-assy. (A-58)	1. Take care not to adhere Toluole to steel ball (A-57). 2. On removal of main ring for diaphragm sub-assy. (A-58), better carry out work in a suitable case to avoid scattering of steel ball.	T ↓ 56-(S640)-48	
12	Round head screw (A-65) Distance dial ring (A-66)		T ↓ 65-(S640)-61	
13	Round head screw (A-59) Change button for helicoid (A-60) Focus ring (A-61) Change lever (A-62) Guide pin for change (A-63) Change lever spring (A-64)	Remove change button for helicoid (A-60) as shown in drawing and take care not to scratch (A-60). 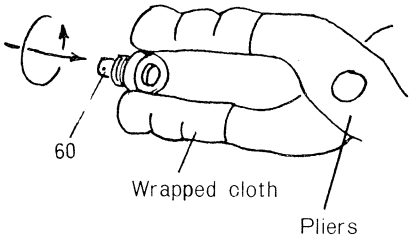 	T ↓ 59-(S640)-61 T ↓ 60-(S640)-61	
14	Round head screw (A-68) Change ring for helicoid sub-assy. (A-69) Helicoid female (A-67)	1. Before removal ff round head screw (A-68), confirm set position as shown in drawing ····· ff regulation position. 2. Remove helicoid female (A-67) after removal of change ring for helicoid (A-69) from outside tube (A-75); otherwise helicoid screw (A-67) on outer periphery may be damaged. 3. Confirm disengaging position of helicoid screws (A-67) and (A-75). 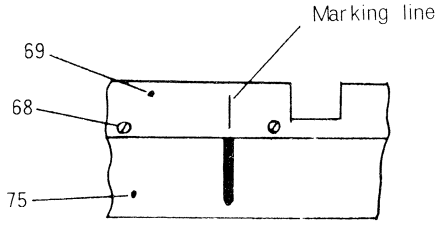 	T ↓ 68-(S640)-69	

Seq.	Parts, Sub-Ass'y to be disassembled (Fig. No.)	Description	Solvent	Exclusive Tools
15	Set ring B for ball (A-70) 1.6 ø steel ball (A-71) Connecting ring sub-assy. (A-72) Set screw for connection plate (A-73) Connection plate (A-74) Outside tube (A-75)	1. Use adequate quantity of toluole to avoid its adherence to steel ball. 2. Work in a suitable case to avoid scattering of steel ball.	T ↓ 70-(S640)-75	

ASSEMBLING PROCEDURES

Seq.	Parts, Sub-Ass'y to be assembled (Fig. No.)	Description	Adhesive Lubricant	Exclusive Tools
1	Outside tube (A-75) Connecting ring sub-assy. (A-72) Set screw for connection plate (A-73) Connection plate (A-74) 1.6 ø steel ball (A-71) Set ring B for ball (A-70)	1. 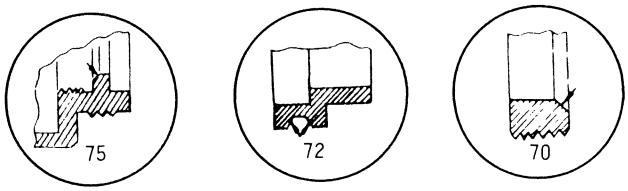 Confirm that no scratch exists at arrow marked positions above. If any, replace it with new one. 2. Amount of backlash in the connecting ring sub-assy. (A-72). 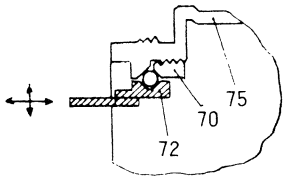 When the set ring B3 for ball (A-70) is tightened, the clearance for (A-72) must be less than 0.1mm and the ball must rotate smoothly in that case. If over-tightened (A-70), arrowed position of step 1 may be damaged causing unsmooth action; therefore, do tightening work while checking its engagement. 3. Application of adhesive 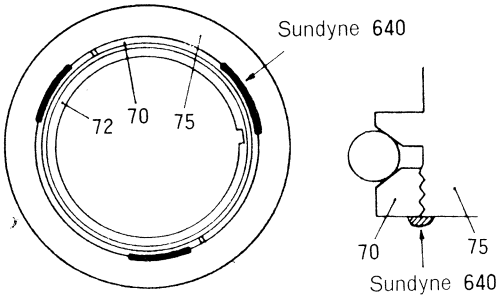 Apply Sundyne as shown. But avoid applying it to the steel ball. 4. Insert steel ball with spoon, etc. and do the work in a suitable case to prevent steel ball from being lost.	73-(S640)-72 70-(S640)-75	

Seq.	Parts, Sub-Ass'y to be assembled (Fig. No.)	Description	Adhesive Lubricant	Exclusive Tools
2	Change ring for helicoid sub-assy. (A-69) Round head screw (A-68) Helicoid female (A-67)	1. Assemble outside tube (A-75) after inserting change ring for helicoid sub-assy. into the helicoid female (A-67). 2. Helicoid insertion position of (A-67) and (A-75) should be made at the position confirmed previously upon disassembly. ○ Assemble by mating the index of (A-75) with notch a of (A-67) and screw by 2 turns. Then, obtain reference dimension of 31.7±0.2mm at their mating positions. 3. Temporarily set by round head screw (A-68) at the scribed position on change ring for helicoid (A-69), with the index of outside tube (A-75). (Up to ff regulation process.) 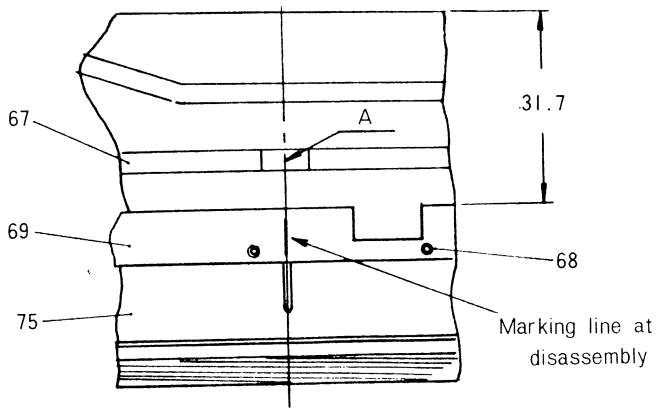 		
3	Change lever spring (A-64) Guide pin for change (A-63) Change lever (A-62) Focus ring (A-61) Change button for helicoid (A-60) Round head screw (A-59)	1. At the position of the above, mate the change lever sub-assy. (A-62, 63) with shorter notch of change ring for helicoid (A-69) and insert focus ring (A-61) to cover it. Thereafter, attach change button for helicoid (A-60) for securing it with round head screw (A-59). 2. Screw (A-60) in with a pair of cloth wrapped pliers.	63-[S640]-62 60-[S640]-62 59-[S640]-61	

Seq.	Parts, Sub-Ass'y to be assembled (Fig. No.)	Description	Adhesive Lubricant	Exclusive Tools
4	Distance dial ring (A-66) Round head screw (A-65)	Round head screw (A-65) must remain temporarily set until ƒƒ regulation process.		
	Hole temporarily assembled parts as above and assemble inside tube and zoom sub-assy.			
5-1	Inside tube (A-48) Main ring for diaphragm sub-assy. (A-58) 1.6 ø steel ball (A-57) Set ring A for ball (A-56)	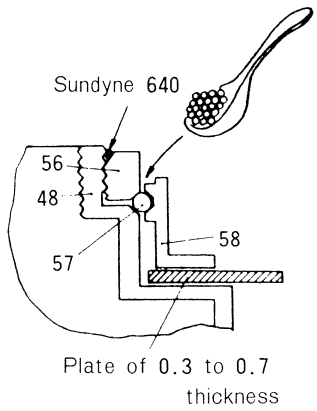 When mounting the steel ball, insert a 0.5 - 0.4mm thick plate in between the set ring sub-assy. (A-58) and inside tube (A-48). Then allow it to flow by placing steel balls in a spollike device. To tighten them, follow the same procedure as step 1 above. A that time, efforts should be made to hold back-lash to a minimum. Apply Sundyne as shown at left. 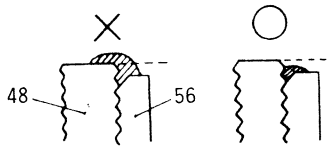 o Insert steel balls in the entire periphery with sufficient clearance provided for two balls.	56-(S640)-48	
5-2	Stud for main spring (A-53) (A-53) Main spring (A-52)	Apply Molycoat all over the contacting area of the main spring (A-52) and main ring (A-58).	52-Ⓜ-58 53-(S640)-48	
5-3	Blade case sub-assy. (A-50) Round head screw (A-49)	1. Assemble blade case sub-assy. by matching it with the marking line. 2. Do not allow the round head screw (A-49) to protrude beyond outer peripheral sur-face of inside tube (A-48). If protrude, make counter-boring (to ensure engagement with zoom sub-assy.).	49-(S640)-48	

Seq.	Parts, Sub-Ass'y to be assembled (Fig. No.)	Description	Adhesive Lubricant	Exclusive Tools
5-4	Bell crank roller (A-51) Grooved cam (A-55) Flat screw (A-54)	1. Mount bell crank roller (A-51). 2. Mount grooved cam (A-55) by matching it with the marking line marked at the time of disassembly. 3. Use a screw driver of the following diameter while checking diaphragm diameter.	51-Ⓜ-55 55-[S640]-58	

F No.	3.5	5.6	8	11	16
Reference diameter	21.6 ~ 19.2	14.0 ~ 11.1	9.8 ~ 7.8	6.9 ~ 5.5	4.9 ~ 3.9

4. Method of adjusting diaphragm diameter grooved.

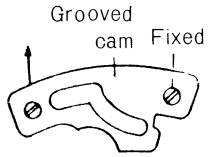

Open diaphragm side becomes larger (if reverse to arrow, smaller).

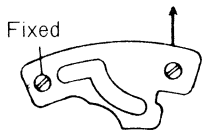

Minimum diaphragm side becomes larger (if reverse to arrow, smaller).

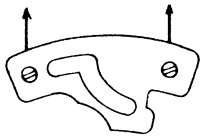

Whole range, from minimum to open, becomes larger (if reverse to arrow, smaller).

4-1. When adjustment by moving grooved cam does not suffice, turn the blade case sub-assy. in its entirely to the right or left.

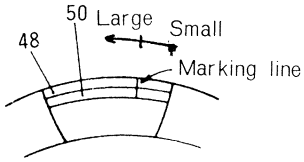

Seq.	Parts, Sub-Ass'y to be assembled (Fig. No.)	Description	Adhesive Lubricant	Exclusive Tools
5-5	Zoom sub-assy. (A-42) Flat thin screw (A-47)	1. Insert at relative position with respect to the inside tube (A-48) confirmed at the time of disassembly and secure it with flat thin screw (A-47). 2. It is advisable to insert inside tube by holding master lens sub-assy. (A-13) for easier work after screwing in the sub-assy. 3. Tighten three flat thin screws (A-47) equally; otherwise smooth zoom operation may not be expected. 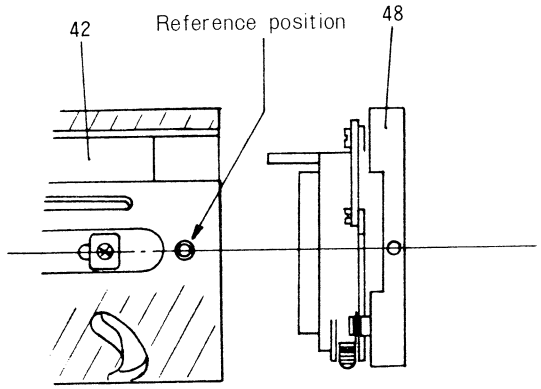 (Relative position between inside tube sub-assy, and zoom sub-assy.)	47-〔S640〕-42	
5-6	Dial ring sub-assy. (A-46) Main pin B for ring (A-45) Index ring sub-assy. (A-44) Round head screw (A-43)	1. Assemble at position where reference position of zoom sub-assy. (A-42) as the above matches with the index of dial ring sub-assy. (A-46). 2. Match the index of dial ring sub-assy. (A-46) with ∞ mark of index ring sub-assy, (A-44) and set it with round head screw (A-43) (refer to the figure shown in step 6.) 3. Take care not to make inner periphery telemp contact with outer periphery screw of helicoid male (B-33) while assembling dial ring sub-assy. and index ring sub-assy.	45-〔S640〕-46 43-〔S640〕-(B-22) 45-Ⓜ-(B-33)	

With all the above steps, assembly work regarding inside tube and zoom sub-assy. is completed. Now proceed with final assembly (docking of zoom sub-assy. and outside tube sub-assy.).

Seq.	Parts, Sub-Ass'y to be assembled (Fig. No.)	Description	Adhesive Lubricant	Exclusive Tools
6	Helicoid female (A-67) Zoom sub-assy. (A-42) Guide plate for helicoid(A-40) Flat thin screw (A-39)	1. Before mounting: 1-1. Confirm that there is no such back-lash as shown exists in position where main lever for diaphragm (B-16) of main ring sub-assy. (A-58) is extremely extended. If any, remove main lever for diaphragm, and extend engaging width with main ring (B-17) by inserting a screwdriver into inner groove of the sub-assy. Un-smooth operation may not affect the performance. 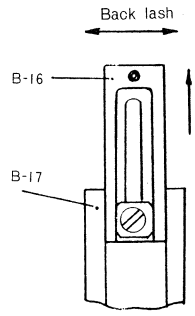 1-2. Confirm focus ring lock is locked in normal position (where red circle of outside tube and change button for helicoid almost agree). 1-3. Better set main ring for zoom on f=45mm side for easier work. 2. Screw in helicoid in a relative position at disassembly and confirm reference dimension of 68.3± 0.2 mm is achieved at position where index of outside tube (A-75) meets index of dial ring (A-46) after turning one and a half revolution. 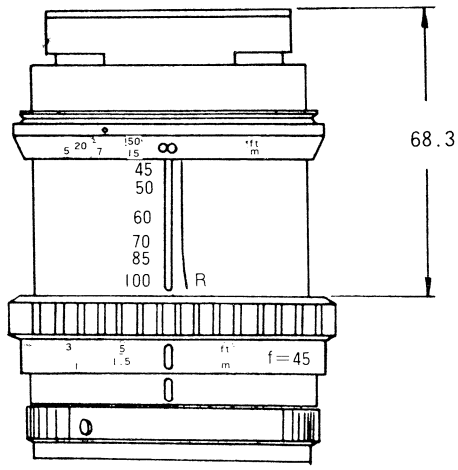 		

Seq.	Parts, Sub-Ass'y to be assembled (Fig. No.)	Description	Adhesive Lubricant	Exclusive Tools
		3. At a position approx. 30° before mating point of reference position, insert one guide plate for helicoid (A-40) and set it after turning up to reference position. Next at a position where focus ring is turned approx. 30° closer to close-up side, set the other one. 4. One mounting base hole out of four for setting guide plate for helicoid is spot faced. Use short flat thin screw.		
7	Main pin A for ring (A-41) Click plate A (A-36) Click plate B (A-38) Flat screw (A-35,37)	1. Shift main ring for zoom (B-22) to f=45mm side, mate hole for main pin A for ring of dial ring (A-46) with groove of helicoid female (A-67) and set it. In case of a product with collar, insert the collar in groove of helicoid female (A-67) in advance. 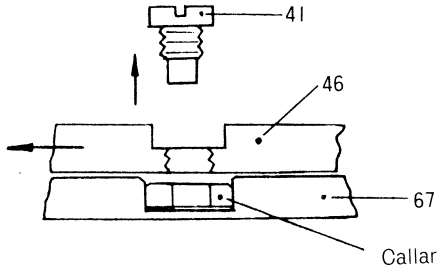 	41-[S640]-46 35-[S640]-75 37-[S640]-75	
8	Connecting screw (A-34)	1. Lock focus ring at RECESS in a state where main lever of inside tube side (B-16) is seated in the longer groove of connecting ring (A-72). 2. Attach connecting screw (A-34), taking care not to bend (B-16). 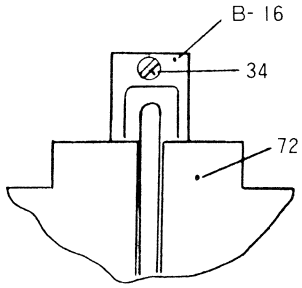 	34-[S640]-(B-16)	

Seq.	Parts, Sub-Ass'y to be assembled (Fig. No.)	Description	Adhesive Lubricant	Exclusive Tools
9	Diaphragm ring (A-33) Stopper for diaphragm ring (A-28) AE lock button sub-assy. (A-32) AE lock lever (A-31) AE lock lever spring (A-30) Set screw for AE lock lever (A-29) Manual stopper sub-assy. (A-27) Manual stopper spring (A-26) Set screw for manual stopper (A-25) 1.6ø steel ball (A-24) Click spring (A-23) Cap for click spring (A-22) Mount (A-21) Counter sunk screw (A-20)	After attaching stopper for diaphragm ring (A-28), move AE lock button sub-assy. (A-32). Preferably radial backlash of diaphragm ring (A-33) must be approx. 0.1. o How to adjust radial backlash. 1. Select stopper for diaphragm ring out of 3 kinds having different dimensions. 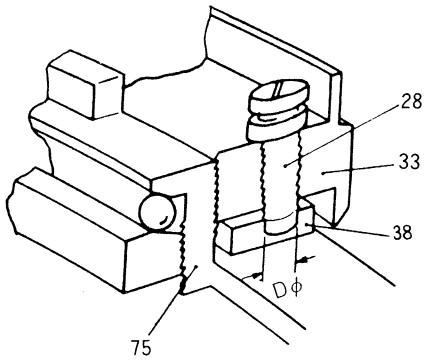 A-28 / Dø 07336 / 1.4ø 07337 / 1.0ø 07338 / 1.7ø 2. If hatched part of AE lock lever sub-assy. is; cut, ····· backlash increases, restriked,·····backlash decreases. 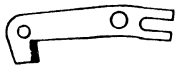 Do not use lubricant to holes receiving AE lock button sub-assy. (A-32) of diaphragm ring (A-33) and parts assembled in this procedure to avoid oil transudation. 3. Adjust strength of click spring by screwing-in quantity of cap for click spring (A-22). Do not allow the head of (A-22) to protrude beyond 75. 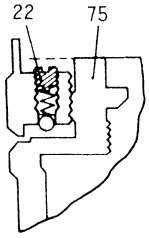 	28-(S640)-33 22-(S640)-33	

Seq.	Parts, Sub-Ass'y to be assembled (Fig. No.)	Description	Adhesive Lubricant	Exclusive Tools
		4. If adjusting washer for flange back is used, assemble it accordingly to record at the time of disassembly.		
		5. Assembly by mating the notch of mount sub-assy. (A-21) with red mark of outside tube (A-75). 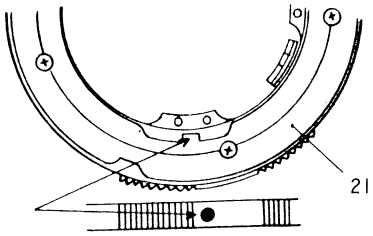	20-(S640)-75	
10	Zoom helicoid sub-assy. (A-17) Flat screw (A-16) Zoom ring (A-19) Round head screw (A-18) Main pin for helicoid (A-15)	1. Mount zoom helicoid sub-assy. (A-17) the position confirmed previously at the time of disassembly. 2. Attach zoom ring (A-19) accordingly, to marking line at disassembly and attach main pin for helicoid (A-15) from groove. 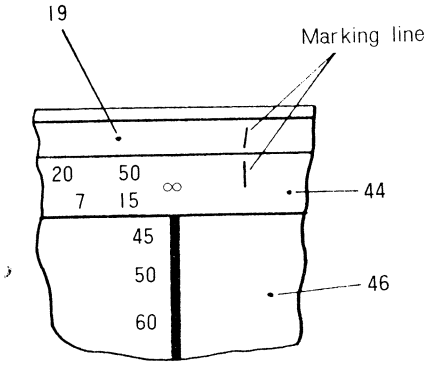 3. Round head screw should temporarily be set.	16-(S640)-(B-33) 15-(S640)-17	

Seq.	Parts, Sub-Ass'y to be assembled (Fig. No.)	Description	Adhesive Lubricant	Exclusive Tools
11	V_2 lens sub-assy. (A-9) V_1 lens sub-assy. (A-7) Reflection protection frame (A-6) FC lens sub-assy. (A-5) Master lens sub-assy. (A-13) Regulating washer (A-8)	1. Assemble V_1 , V_2 reflection preventive frame, FC master lens sub-assy. in that order. 2. Take same zoom position at the time of assembly as at disassembly. 3. Insert the number of washers which have been confirmed at the time of disassembly.		
12	FC regulation	1. Focus error between f=45mm side and f=100mm shall be not more than approx. 0.1, when checked with collimater or camera mounted on. 2. Regulate by releasing round head screw (A-18) temporarily setling zoom ring (A-19) turning zoom ring (A-19) and moving FC lens sub-assy. (A-5) back and forth.	18-〔S640〕-19	
13	ƒƒ regulation	1. Loosen round head screw (A-65) and shift distance dial ring (A-66) to the mount side. 2. Loosen round head screw (A-68) and adjust ƒƒ by turning focus ring in a state where focus ring (A-61) is normally locked (not releasing lock). 3. ƒƒ specification. ƒ= 45mm - 0.05·····+0.15 ƒ= 100mm - 0.03·····+0.17 4. Set round head screw.	68-〔S640〕-69 65-〔S640〕-61	

Seq.	Parts, Sub-Ass'y to be assembled (Fig. No.)	Description	Adhesive Lubricant	Exclusive Tools
14	Zoom leather (A-14) Hood (A-4) Front tube (A-3) Round head screw (A-2) Covered plate (A-12) Counter sunk screw (A-11)	1. If round head screw (A-11) is slightly longer than as necessary or counter-sinking of covered plate (A-12) is too large, tip of counter sunk screw contacts the rear end of connecting ring (A-72). Thus non-smooth operation of connecting lever for diaphragm may not be expected.	2-(S640)-3 11-(S640)-21	

Konica 70-150MM/F4
ZOOM HEXANON AR

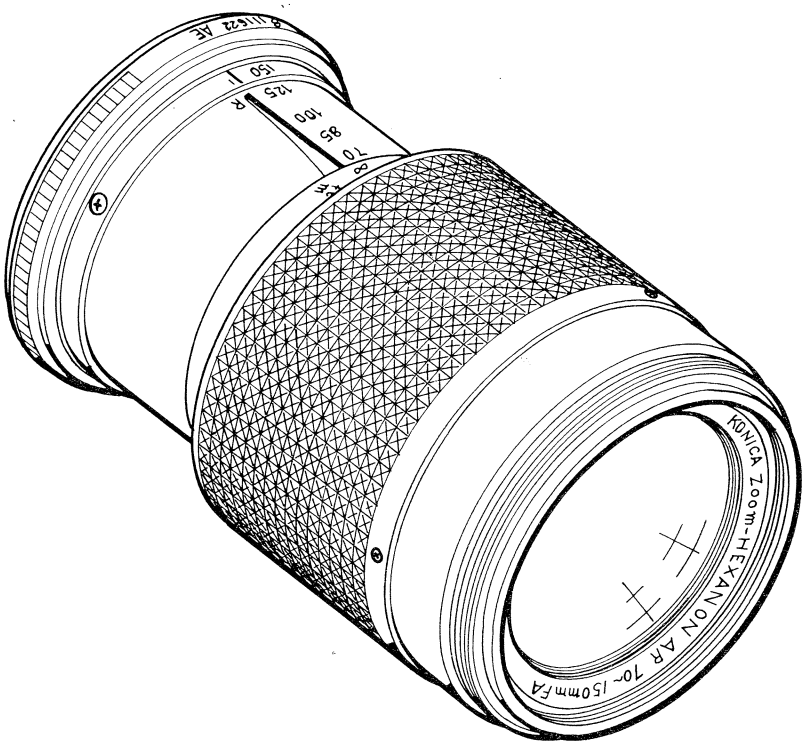

HOW TO MAKE THE BEST USE OF THIS LIST

This list is to serve as a guide to disassembling of Konica Hexanon Lenses and to placing orders for the parts and/or sub-assemblies required.

§ To disassemble Konica Hexanon Lenses

When disassembling Konica Hexanon Lenses, it is advisable to follow in the order of Figure A, A and C, and Figure Numbers in each drawing. Disassembling sequence of the main parts and sub-assemblies shown in Fig. A is given in Fig. B and C.

§ To order parts

You are requested, for supply of correct parts, to indicate on your order sheet Manufacture No. "XXXX" of each lens and Parts No. printed at the right top on each page of the list, in the manner described below.
"X" marked parts are excluded from parts supply service.
Indication of Fig. No., Lens Model Name, Parts (Sub-assembly) name is not necessary.

Lens Mf. No.	Parts (Sub-assembly) No.	Qty.	Remarks
XXXX	OXXXX		
	XXXXX		
	XXX		

Note 1. In the column of Remarks, only absolutely necessary description should be made briefly.

Note 2. In case Parts (Sub-assembly) No. is not known or clear from the Manual, please order such parts in any of the following methods.

(a) Actual parts required are attached.

(b) Photos of the parts required are attached (with rough dimensions).

(c) Sketches of the parts required are attached (with rough dimensions).

Of the above, method (a) or (b) is preferable in placing orders for parts, In this case, reasons for the parts No. being not clear are to be mentioned in the Remarks column on the order sheet.

§ Classification of Parts, Sub-assembly Numbers.

In this parts list, three kinds of number are used as follows:

I) OXXXX……5 figure Parts No. prefixed by O.

II) XXXXX……Parts No. in 5 figures.

III) XXX……Sub-assembly No. in 3 figures.

I) O××××·····5 figure Parts No. prefixed by O.
Above No. is used for each individual parts excluding small screws, rivets and E washers.

II) ×××××·····Parts No. in 5 figures.
Small screws, rivets and E washers are standardized to be called standard parts, and are usable on any unit regardless of the camera model if the same parts No. is given. In other words, these parts can be used in common on all the Konica products.

III) ×××·····Sub-assembly No. in 3 figures.
→ Serial No.
→ Represents a mechanism to which the sub-assembly belongs.

Sub-assembly No. is given to a group of parts assembled or incorporated.

§ Note Columns

Following description is made in each Note Column.

1. Attention required points in disassembling and reassembling.
2. Necessity of use of special tools, and kinds of such tools.
3. Necessity of use of designated adhesive, lubricant, and kinds of such agents.

Symbol — O×××
→ Parts to be bonded with inserted in.
→ Indicative of adhesive, lubricant.

§ Symbols of Adhesive, Lubricant

Lubricant	(Symbol)	Adhesive	(Symbol)
EG-4	Ⓔ	Lacquer	〔L〕
Helicoid Grease	Ⓖ	Sundine	〔S640〕
Molykote G	Ⓜ		

◎Re Distribution of Parts Change Notice

After issuance of manuals, there sometimes come out changes in parts or subassemblies for the purpose of quality improvement. by implementing sound communication of information on alteration of parts and subassemblies, procurement of new parts desired will be made more securely, which we hope will help keep up efficiency of Konicas and enhance quality betterment.

1. "Parts Change Notice" as per the form of Attached sheet-1 will be issued against the parts, subassemblies for which repair service is required in consequence of rectification, alteration, abolition relating to improvement on parts and subassemblies.

2. On the "Parts Change Notice", following contents are described.

   Column

   a) Date of notice issued.
   b) Short name for the objective camera and notice serial No.
   c) Model No. of the objective camera.
   d) Parts No. of the related parts, subassemblies.
   e) Classification of notice (whether new parts, disused, changed).
   f) Caution to rectification or repair necessitated by parts change. Illustrations are given where necessary.
   g) The same as (b).
   h) Serial No. of the objective camera.
   i) Parts No. In the triangle given in this column, No. of change made is to be mentioned.
   j) Illustration of parts is to be given to show dimensions of older and new parts compared.
   k) Here comes secondarily related parts No. affected by the parts change, and parts change Notice No. already issued.
   ℓ) Countermeasures 1-3 are to be checked with circle (around Yes or No).

3. Lower part of "Parts Change Notice" slip is to be cut off from the indication line and is to be pasted in order on the "Parts Change Record" card as shown by the form of Attached Sheet-2.

4. In the column (i) of Attached Sheet-1, parts change frequency No. mark(△1 △2 △3 ……) is provided. This mark is to be mentioned on the Manual as shown in the Attached Sheet-3.
   By doing so without fail, confirmation as to whether the relative parts is changed or not will become easier and procurement of the improved parts required will be made securely. After issuance of

Parts Change Notice, disuse of older parts and storage of improved new parts will be carried out.
Therefore, careful attention to manual abministration is solicited.

5. Erroneous shipment can be prevented by indicating on order sheet Parts Change Frequency No. Mark △1△2……following the parts No. In case judgement as to whether new or old parts is required or what sort of parts is required is difficult, supply of parts may be retarded. Kindly be careful in this matter.

Sheet-1

Date	ⓐ
No.	ⓑ

Parts Change Notice
(部品変更連絡票)

Model No. 製番	ⓒ	1 2 3 ⓔ New Parts, Disused, Changed (新設) (廃止) (変更)	八王子			担当
Parts No. 部番	ⓓ		本社			担当

Rectification . Repair to be made :
(改修、修理方法)

ⓕ

No.	ⓖ	Related Change Notice and Parts No. (関連変更連絡票No.及び部番) ⓚ
Serial No. (整理番号)	ⓗ	
Parts No. (部番)	ⓘ —△	Countermeasures to be taken: (処置) 1. Old New Parts Interchangeability: (新・旧部品の互換性) YES. NO. 2. Additional Processing on to OId Parts. (旧部品への追加工) YES. (Parts No.) NO. 3. Remarks. (注記) ⓛ 4. Price : FOB Japan
Parts Illustrated (部品図) ⓙ		

Fig-1

Fig-2

Konica 70-150MM/F4 ZOOM HEXANON AR **A**

A-1 Konica 70-150MM/F4 ZOOM HEXANON AR MODEL No. 3568

1	2	3	4	5	6
Fig. No.	Parts No. or Sub-assembly	部品・部組名称	Parts name or Sub-assembly name	Note	Disassembling Fig. index
A-1	501	レンズキャップ部組	Lens cap sub-assy		
	×07503	銘 板	Name plate		
	×07502	キャップバネ	Lens cap spring		
	×07504	補助スプリング	Auxiliary spring		
	×07501	レンズキャップ	Lens cap		
A-2	07951	彫刻リング	Engrave ring		
A-3	16405	1.7φ×2.0 剣先ネジ	1.7φ×2.0 Round head screw	〔S640〕-07952	
A-4	701	FCレンズ部組	FC Lens sub-assy		C
A-5	531	フード部組	Lens hood sub-assy		C
A-6	07259 ⚠1	遮光枠	Light shield ring	〔S640〕-07252	
A-7	702	V_1レンズ部組	V_1 Lens sub-assy		C
A-8	703	V_2レンズ部組	V_2 Lens sub-assy		C
A-9	07511	マウントキャップ	Lens mount cap		
A-10	07407	化粧リング止めネジ	Covered ring setscrew	〔S640〕-07401	
A-11	07403	化粧リング	Covered ring		
A-12	704	Mレンズ部組	M Lens sub-assy		C
A-13	07986	M座金	M Washer	07986 t=0.1 07987 t=0.05	
A-14	07269	ズームフォーカス光皮	Zoom focus ring leather		
A-15	07270	ズームフォーカスリング止めネジ	Zoom focus ring setscrew	〔S640〕-07268	
A-16	07275	フォーカスカバー板	Focus ring cover plate		
A-17	07268	ズームフォーカスリングカバー	Zoom focus ring cover		
A-18	07266	フォーカス案内板止めネジ	Focus guide plate setscrew	〔S640〕-07265	
A-19	07274	指標リング止めネジ	Point ring setscrew	〔S640〕-07261	

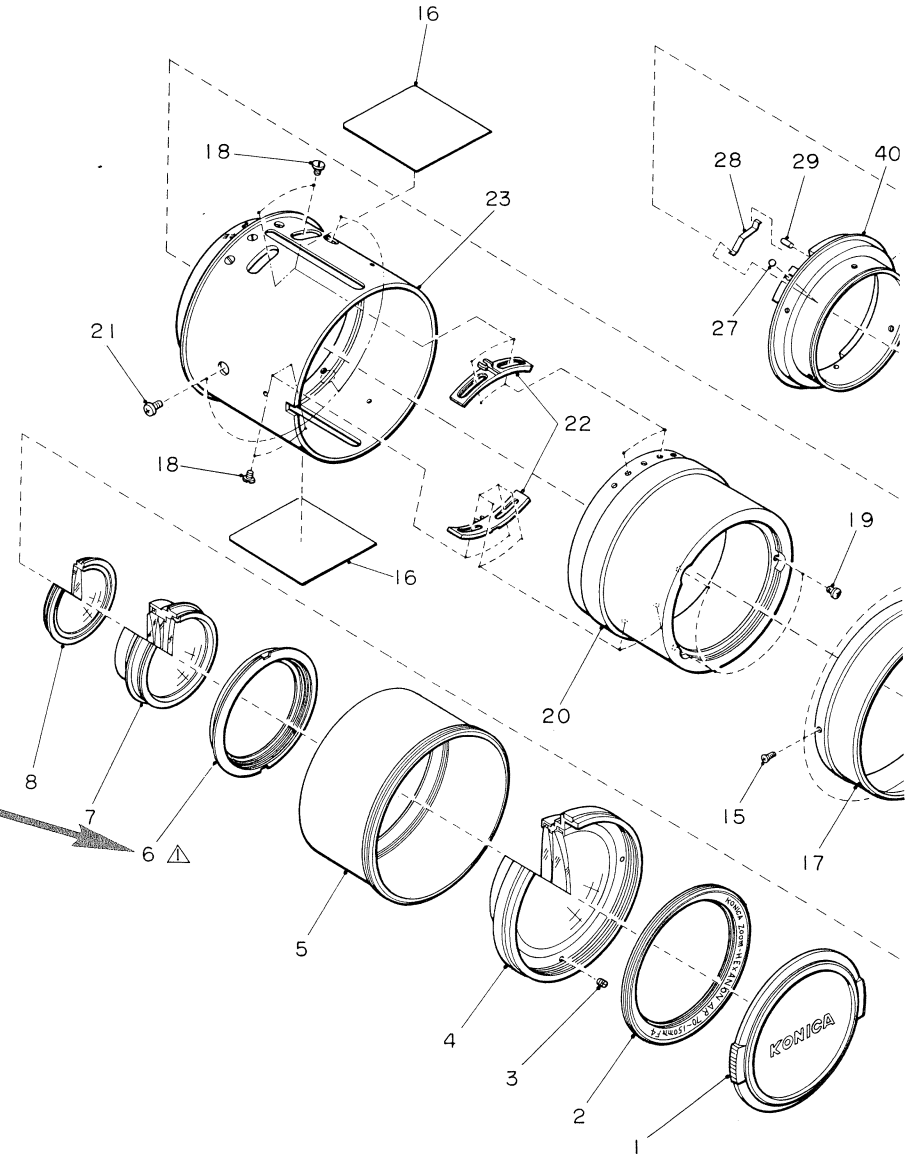

A-1 Konica ZOOM HEXANON AR 70-150MM/F4 MODEL No. 3568

1	2	3	4	5	6
Fig. No.	Parts No. or Sub-assembly	部品・部組名称	Parts name or Sub-assembly name	Note	Disassembling Fig. index
A-1	501	レンズキャップ部組	Lens cap sub-assy		
	×07503	銘 板	Name plate		
	×07502	キャップバネ	Lens cap spring		
	×07504	補助スプリング	Auxiliary spring		
	×07501	レンズキャップ	Lens cap		
A-2	07951	彫刻リング	Engrave ring		
A-3	16405	1.7φ×2.0 剣先ネジ	1.7φ×2.0 Round head screw	〔S640〕-07952	
A-4	701	FCレンズ部組	FC Lens sub-assy		C
A-5	531	フード部組	Lens hood sub-assy		C
A-6	07259	遮光枠	Light shield ring	〔S640〕-07252	
A-7	702	V_1レンズ部組	V_1 Lens sub-assy		C
A-8	703	V_2レンズ部組	V_2 Lens sub-assy		C
A-9	07511	マウントキャップ	Lens mount cap		
A-10	07407	化粧リング止めネジ	Covered ring setscrew	〔S640〕-07401	
A-11	07403	化粧リング	Covered ring		
A-12	704	Mレンズ部組	M Lens sub-assy		C
A-13	07986	M座金	M Washer	07986 t=0.1 07987 t=0.05	
A-14	07269	ズームフォーカス光皮	Zoom focus ring leather		
A-15	07270	ズームフォーカスリング止めネジ	Zoom focus ring setscrew	〔S640〕-07268	
A-16	07275	フォーカスカバー板	Focus ring cover plate		
A-17	07268	ズームフォーカスリングカバー	Zoom focus ring cover		
A-18	07266	フォーカス案内板止めネジ	Focus guide plate setscrew	〔S640〕-07265	
A-19	07274	指標リング止めネジ	Point ring setscrew	〔S640〕-07261	
A-20	261	ヘリコイド部組	Helicoid sub-assy		B
A-21	65695	2.6φ×2.8 ナベ小ネジ	2.6φ×2.8 Plus pan head screw	〔S640〕-07263	
A-22	07265	フォーカス案内板	Focusing guide plate		
A-23	267	ズームフォーカス部組	Zoom focus sub-assy		C

Konica ZOOM HEXANON AR 70-150MM/F4

MODEL No. 3568

1	2	3	4	5	6
Fig. No.	Parts No. or Sub-assembly	部品・部組名称	Parts name or Sub-assembly name	Note	Disassembling Fig. index
A-24	63489	1.7φ×5.0 サラ小ネジ	1.7φ×5.0 Plus counter sunk screw		
A-25	401	マウント部組	Lens mount sub-assy		C
A-26	07301	絞りリング	Diaphragm ring		
A-27	51209	2.0φ 鋼 球	2.0φ Steel ball	Ⓜ-07301	
A-28	07305	クリックバネ	Click spring		
A-29	07306	クリックバネ柱	Click spring stud		
A-30	07322	AEロックレバー軸	A.E Lock lever shaft		
A-31	07326	AEロックレバーバネ	A.E Lock lever spring		
A-32	07321	AEロックレバー	A.E Lock lever		
A-33	07159	作動バネ	Main spring		
A-34	07215	ボール押え枠	Steel ball set ring	〔S640〕-07210	
A-35	51160	1.6φステンレスボール	1.6φ Stainless steel ball		
A-36	203	接続リング部組	Diaphragm connection ring sub-assy		B
A-37	07274	指標リング止めネジ	Point ring setscrew	〔S640〕-07203	
A-38	07274	指標リング止めネジ	Point ring setscrew	〔S640〕-07203	
A-39	61575	2.0φ×3.0 ナベ小ネジ	2.0φ×3.0 Plus pan head screw	〔S640〕-07203	
A-40	07203	取付座	Out side tube		
A-41	07220	ff調整座金	Regulation washer	07220 t=0.03 07221 t=0.05 07222 t=0.1 07223 t=0.3 07224 t=0.5 07225 t=1.0	
A-42	07264	指標リング	Point ring		
A-43	251	ズーム部組	Zoom sub-assy		B

Konica 70-150MM/F4
ZOOM HEXANON AR

A

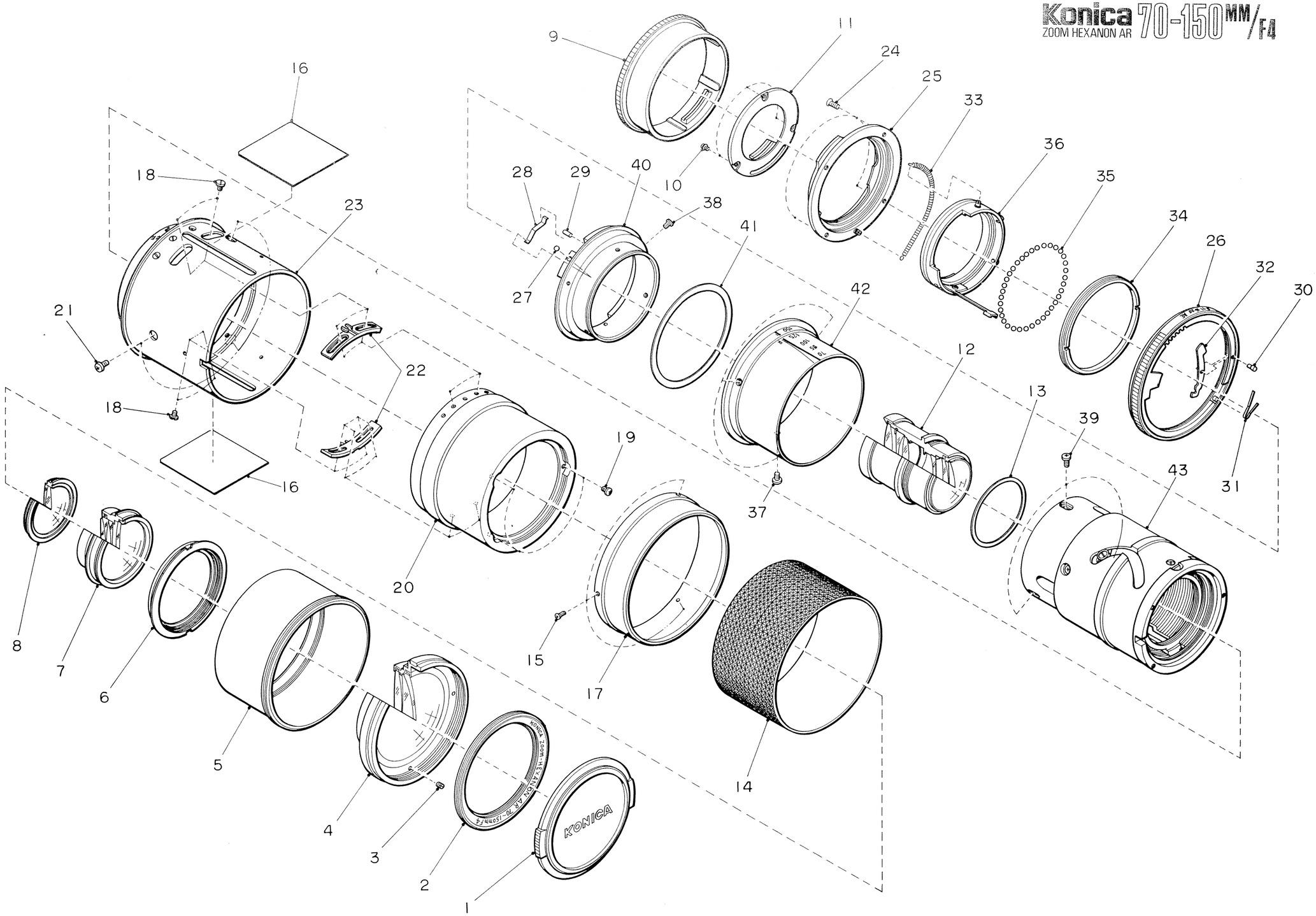

B-1 Konica ZOOM HEXANON AR 70-150MM/F4 MODEL No. 3568

1	2	3	4	5	6
Fig. No.	Parts No. or Sub-assembly	部品・部組名称	Parts name or Sub-assembly name	Note	Disassembling Fig. index
	101	羽根ケース部組	Blade case sub-assy		
B-1	×07105	リング押え	Turning ring holder		
B-2	×07102	駆動リング	Turning ring		
B-3	109	絞り羽根部組	Diaphragm blade sub-assy		B
	×07112	羽根タボ	Diaphragm blade dowell		
	×07111	絞り羽根	Diaphragm blade		
B-4	×07101	羽根ケース	Blade case		
	109	絞り羽根部組	Diaphragm blade sub-assy		
B-5	×07112	羽根ダボ	Diaphragm blade dowell		
B-6	×07111	絞り羽根	Diaphragm blade		
	203	接続リング部組	Diaphragm connection ring sub-assy		
B-7	×07160	作動バネ柱A	Main spring stud A		
B-8	×07162	リング制限ネジ	Stopper screw		
B-9	65405	1.7φ×2.0 ナベ小ネジ	1.7φ×2.0 Plus pan head screw	〔S640〕-07212	
B-10	×07212	絞り接続板	Diaphragm connection plate		
B-11	65324	1.4φ×3.0 ナベ小ネジ	1.4φ×3.0 Plus pan head screw	〔S640〕-07231	
B-12	×07231	本体接続板	Connection plate		
B-13	×07210	接続リング	Diaphragm connection ring		
	251	ズーム部組	Zoom sub-assy		
B-14	×07254	V_1枠止めネジ	V_1 Slide ring setscrew	〔S640〕-07253	
B-15	×07255	V_1摺動枠	V_1 Slide ring		
B-16	×07257	カムカラー止めネジ	Cam collar setscrew	〔S640〕-07256	
B-17	×07258	カムカラー	Cam collar		
B-18	×07253	ズーム作動リング	Zoom working ring	Ⓖ-07281	
B-19	×07281	ズーム摩擦体	Zoom frictonal resistor	Ⓖ-07253	
B-20	×07282	ズーム摩擦体バネ	Zoom frictonal resistor spring		
B-21	61545	2.0φ×2.2 ナベ小ネジ	2.0φ×2.2 Plus pan head screw	〔S640〕-07251	

Konica ZOOM HEXANON AR 70-150MM/F4

MODEL No. 3568

1	2	3	4	5	6
Fig. No.	Parts No. or Sub-assembly	部品・部組名称	Parts name or Sub-assembly name	Note	Disassembling Fig. index
B-22	×07252	第2主胴	No.2 main tube	Ⓖ-07256	
B-23	×07256	V2摺動枠	V2 Slide barrel	Ⓖ-07252	
B-24	61545	2.0φ×2.2 ナベ小ネジ	2.0φ×2.2 Plus pan head screw	〔S640〕-07251	
B-25	1 0 1	羽根ケース部組	Blade case sub-assy		B
	×07105	リング押え	Turning ring holder		
	×07102	駆動リング	Turning ring		
	1 0 9	絞り羽根部組	Diaphragm blade sub-assy		B
	×07112	羽根ダボ	Diaphragm blade dowell		
	×07111	絞り羽根	Diaphragm blade		
	×07101	羽根ケース	Blade case		
B-26	×07251	第1主胴	No.1 main tube		
	2 6 1	ヘリコイド部組	Helicoid sub-assy		
B-27	×07262	ヘリコイド雌	Helicoid female	Ⓖ-07261	
B-28	×07261	ヘリコイド雄	Helicoid male	Ⓖ-07262	

Konica ZOOM HEXANON AR 70-150MM/F4 B

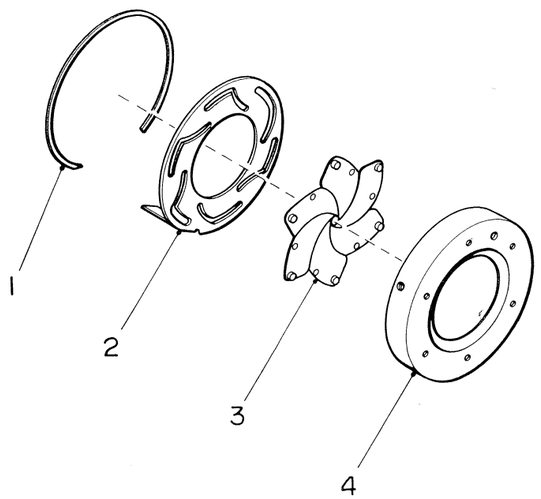

101

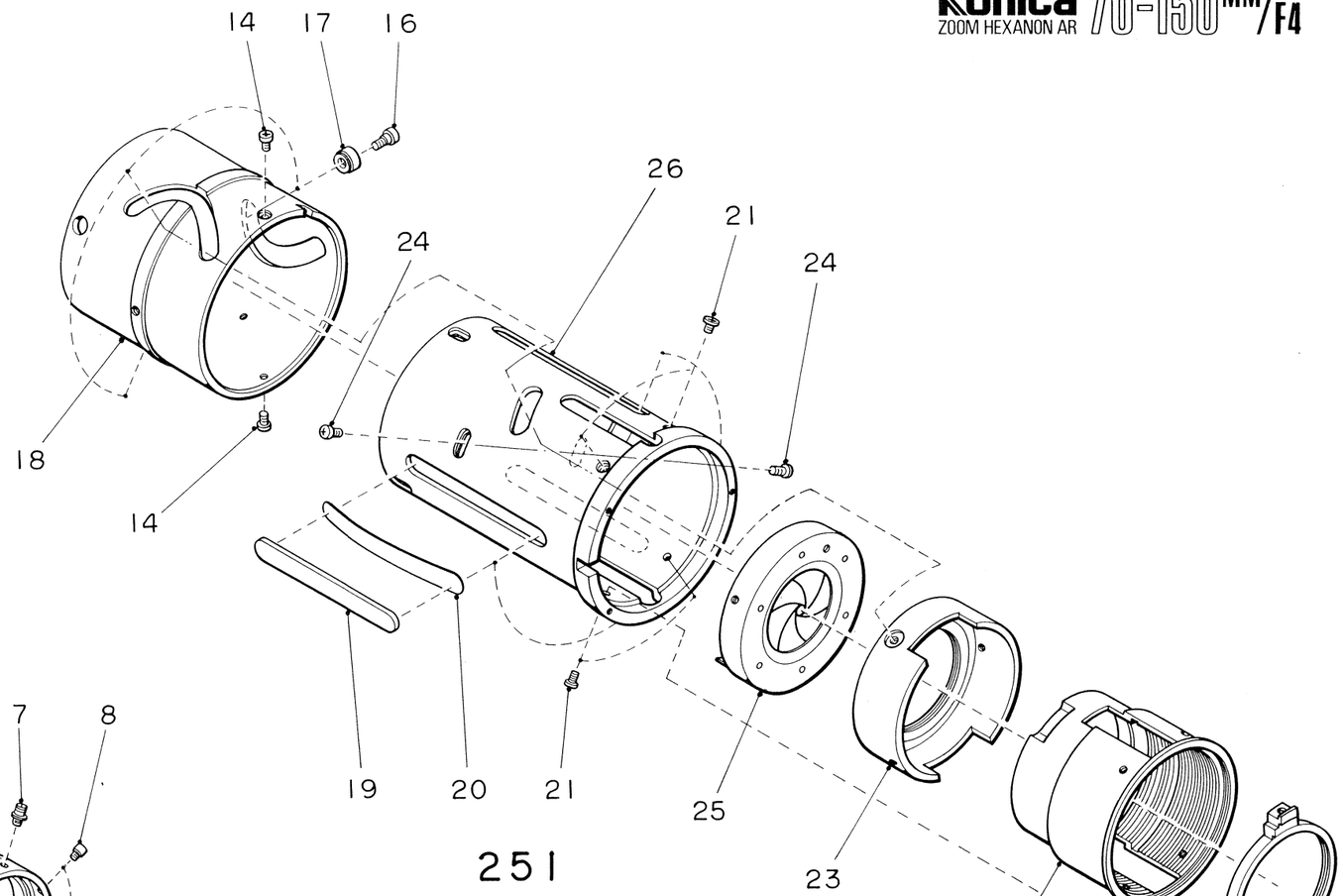

251

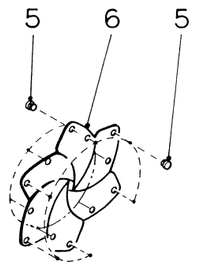

109

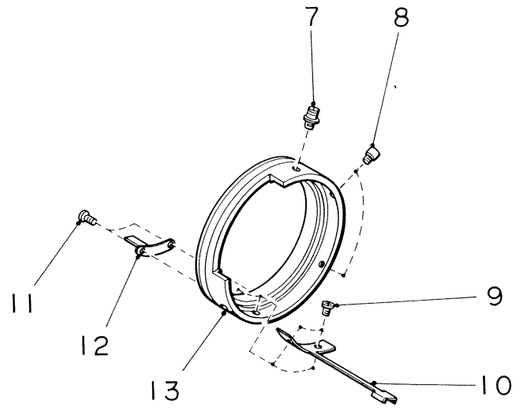

203

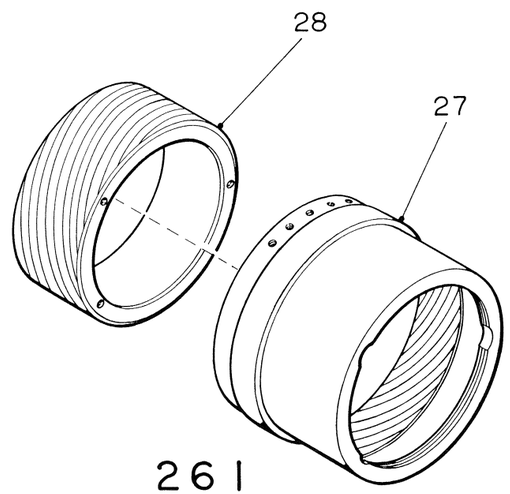

261

C-1 Konica ZOOM HEXANON AR 70-150MM/F4 MODEL No. 3568

1	2	3	4	5	6
Fig. No.	Parts No. or Sub-assembly	部品・部組名称	Parts name or Sub-assembly name	Note	Disassembling Fig. index
	267	ズームフォーカス部組	Zoom focus sub-assy		
C-1	×07271	フォーカス ストッパーピン	Focus stopper pin	〔S640〕-07263	
C-2	×07263	ズームフォーカス 連結環	Zoom focus connection ring		
C-3	×07273	フォーカス ストッパー止めネジ	Focus stopper setscrew	〔S640〕-07272	
C-4	×07272	フォーカス ストッパー板	Focus stopper plate		
C-5	×07267	ズームフォーカス リング	Zoom focus ring		
	401	マウント部組	Lens mount sub-assy		
C-6	×07161	作動バネ柱	Main spring stud		
C-7	×07402	マウント制限ネジ	Lens mount limitation screw		
C-8	×07401	マウント	Lens mount		
	531	フード部組	Lens hood sub-assy		
C-9	×07533	フード用ビロードB	Lens hood cloth lining B		
C-10	×07531	フード筒	Lens hood		
	701	FCレンズ部組	FC lens sub-assy		
C-11	×07953	第1レンズ押え枠	Set ring No.1 lens		
C-12	×07901	第1レンズ	No.1 lens		
C-13	×07902	第2レンズ	No.2 lens		
C-14	×07954	第3レンズ押え枠	Set ring No.3 lens		
C-15	×07903	第3レンズ	No.3 lens		
C-16	×07532	フード用ビロードA	Lens hood cloth lining A		
C-17	×07952	FC枠	FC lens barrel		
	702	V_1レンズ部組	V_1 lens sub-assy		
C-18	×07962	第4レンズ押え枠	Set ring No.4 lens		
C-19	×07904	第4レンズ	No.4 lens		

Konica ZOOM HEXANON AR 70-150MM/F4

MODEL No. 3568

1	2	3	4	5	6
Fig. No.	Parts No. or Sub-assembly	部品・部組名称	Parts name or Sub-assembly name	Note	Disassembling Fig. index
C-20	×07963	第6レンズ押え枠	Set ring No.6 lens		
C-21	×07907	第7レンズ	No.7 lens		
C-22	×07906	第6レンズ	No.6 lens		
C-23	×07905	第5レンズ	No.5 lens		
C-24	×07961	V_1枠	V_1 lens barrel		
	703	V_2レンズ部組	V_2 lens sub-assy		
C-25	×07908	第8レンズ	No.8 lens		
C-26	×07909	第9レンズ	No.9 lens		
C-27	×07971	V_2枠	V_2 lens barrel		
	704	Mレンズ部組	M lens sub-assy		
C-28	×07910	第10レンズ	No.10 lens		
C-29	×07982	第10レンズ枠	No.10 lens frame		
C-30	×07911	第11レンズ	No.11 lens		
C-31	×07983	第12レンズ押え枠	Set ring No.12 lens		
C-32	×07912	第12レンズ	No.12 lens		
C-33	×07985	第15レンズ押え枠	Set ring No.15 lens		
C-34	×07915	第15レンズ	No.15 lens		
C-35	×07984	間隔リング	Spacer ring		
C-36	×07914	第14レンズ	No.14 lens		
C-37	×07913	第13レンズ	No.13 lens		
C-38	×07981	M枠	M lens barrel		

Konica 70-150MM/F4 ZOOM HEXANON AR

C

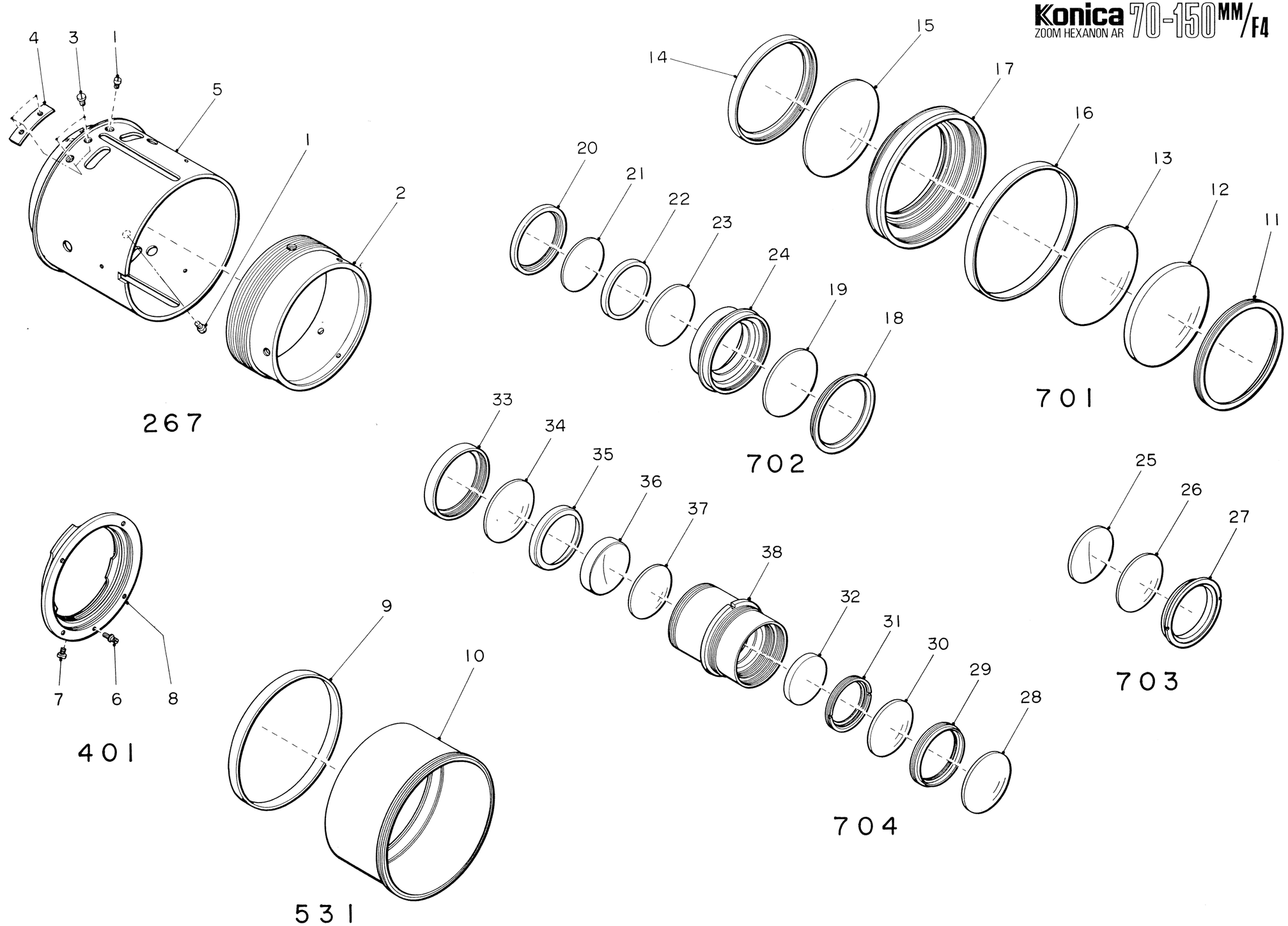

Seq.	Parts, Sub-Ass'y to be disassembled (Fig. No.)	Description	Solvent	Exclusive Tools
1	Engrave ring (A-2)	The engrave ring (A-2) is screwed in on the filter of the FC lens sub-assembly (A-4). While powerfully depressing a rubber strip to the ring, turn and take off the ring. 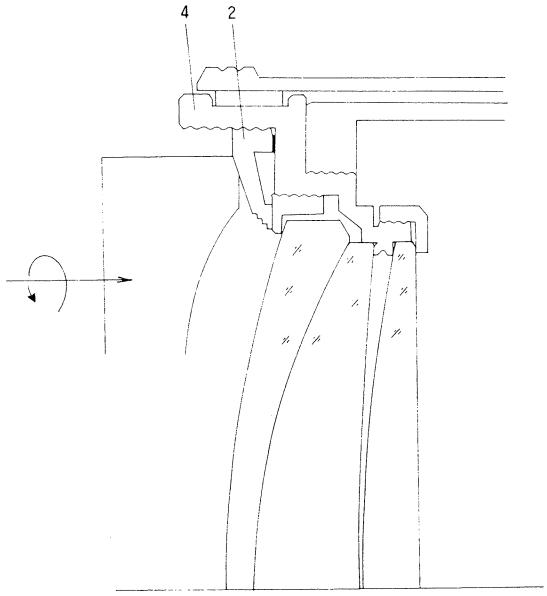 Fig. 1		
2	1.7ø x 2.0 Round head screw (A-3) FC lens sub-assy (A-4) Hood sub-assy (A-5)	The FC lens sub-assembly (A-4) is screwed in on the helicoid sub-assembly (A-20). After the 1.7ø x 2.0 round head screw (A-3) has been taken off, turn the sub-assembly with a monkey wrench and take it off. Pull out the lens hood sub-assembly (A-5). 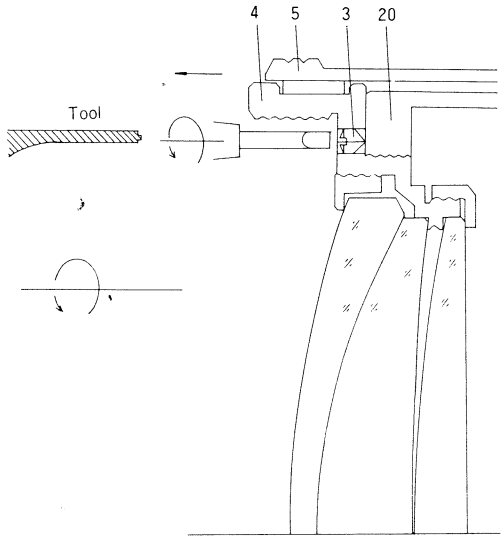 Fig. 2		

Seq.	Parts, Sub-Ass'y to be disassembled (Fig. No.)	Description	Solvent	Exclusive Tools
3	Light shield ring (A-6) V1 lens sub-assy (A-7) V2 lens sub-assy (A-8)	The light shield ring (A-6), V1 lens sub-assembly (A-7) and V2 lens sub-assembly (A-8) are screwed in on the No.2 main tube, V1 slide ring and No.2 slide ring, respectively, of the zoom sub-assembly (A-43). Turn these devices with a monkey wrench and take them off.		
4	Covered ring setscrew (A-10) Covered ring (A-11)			
5	M lens sub-assy (A-12) M washer (A-13)	The M lens sub-assembly (A-12) is screwed in on the No.1 main tube (B-26) of the zoom sub-assembly (A-43). Turn the sub-assembly with a monkey wrench and take it off. The M lens sub-assembly (A-12) and the No.1 main tube uses M washers (A-13). Ascertain the number and thickness of the washers when the sub-assembly is to be taken off.		
6	Zoom focus ring leather (A-14) Zoom focus ring setscrew (A-15) Focus ring cover plate (A-16) Zoom focus ring cover (A-17)	Two focus ring cover plates (A-16) are situated beneath the zoom focus ring leather (A-14). Do not bend them when they are taken off. As the focus ring cover plate (A-16) is inserted into the edge of the zoom focus ring cover (A-17), take off the zoom focus ring setscrews (A-15) backward. 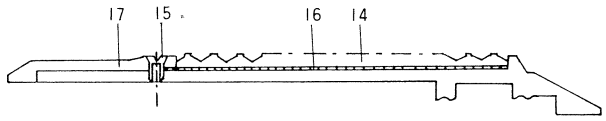 Fig. 3		
7	Focus guide plate setscrew (A-18) Point ring setscrew (A-19) Helicoid sub-assy (A-20)	Take off the focus guide plate setscrews (A-18) and set the focus guide plate (A-22) free. Take off the point ring setscrews (A-19) and pull out the helicoid sub-assembly (A-20) in the forward direction. 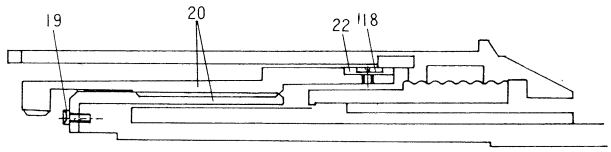 Fig. 4		

Seq.	Parts, Sub-Ass'y to be disassembled (Fig. No.)	Description	Solvent	Exclusive Tools
8	Focusing guide plate (A-22) 2.6 ø x 2.8 plus pan head screw (A-21) Zoom focus sub-assy (A-23)	Take off the 2.6 ø x 2.8 plus pan head screws (A-21) from the tap-holes of the zoom focus sub-assembly (A-23), and take off the zoom focus sub-assembly (A-23) in the frontal direction. 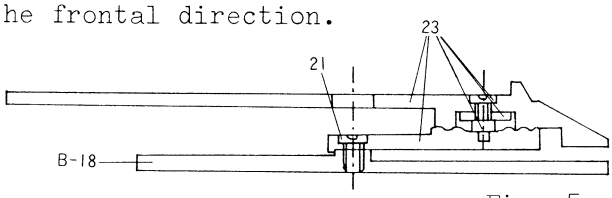 Fig. 5		
9	1.7 ø x 5.0 plus counter sunk screw (A-24) Lens mount sub-assy (A-25) Main spring (A-33) Steel ball set. ring (A-34) 1.6 ø stainless steel ball (A-35) Diaphragm connection ring sub-assy (A-36)	For the disassembling of the diaphragm connection ring sub-assembly (A-36), place it in a container to prevent a dispersion of the stainless steel balls.		
10	Diaphragm ring (A-26) 2.0 ø steel ball (A-27) Click spring (A-28) Click spring stud (A-29) AE lock lever shaft (A-30) AE lock lever spring (A-31) AE lock lever (A-32)	When the diaphragm ring (A-26) is detached, do not lose the 2.0 ø steel balls (A-27).		

Seq.	Parts, Sub-Ass'y to be disassembled (Fig. No.)	Description	Solvent	Exclusive Tools
11	Point ring setscrew (A-37) Point ring (A-42) 2.0ø x 3.0 plus pan head screw (A-39) Regulation washer (A-41) Point ring setscrew (A-38) Out side tube (A-40)	Ascertain the number and thickness of the regulation washers (A-41). Do not bend them.		
12	V_1 slide ring setscrew (B-14) V_1 slide ring (B-15) Cam collar setscrew (B-16) Cam collar (B-17) Zoom working ring (B-18) Zoom frictonal resistor (B-19) Zoom frictonal resistor spring (B-20) 2.0ø x 2.2 plus pan head screw (B-21) No.2 main tube (B-22) V_2 slide barrel (B-23)	When the zoom working ring (B-18) is taken off from the No.1 main tube (B-26), make sure that the zoom frictional resistor (B-19) and zoom frictional resistor spring (B-20) are depressed, as they tend to leap out. 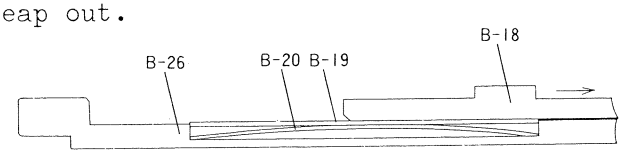 Fig. 6 Before the No.2 main tube (B-22) and V_2 slide barrel (B-23) are to be disassembled, mark off on the outside so that they may be assembled with ease. 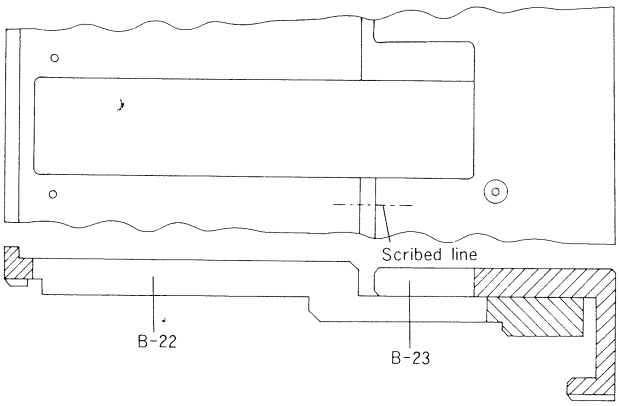 Fig. 7		

Seq.	Parts, Sub-Ass'y to be disassembled (Fig. No.)	Description	Solvent	Exclusive Tools
13	2.0ø x 2.2 plus pan head screw (B-24) Turning ring holder (B-1) Turning ring (B-2) Diaphragm blade sub-assy (B-3) Blade case (B-4) No.1 main tube (B-26)	Before disassembling, mark off for the positions of the 2.0ø x 2.2 plus pan head screws (B-24) and No.1 main tube (B-26). For the disassembling of the blade case assembly, put scratches for the positions of the blade case (B-4) and turning ring (B-2) to facilitate their assembling work. 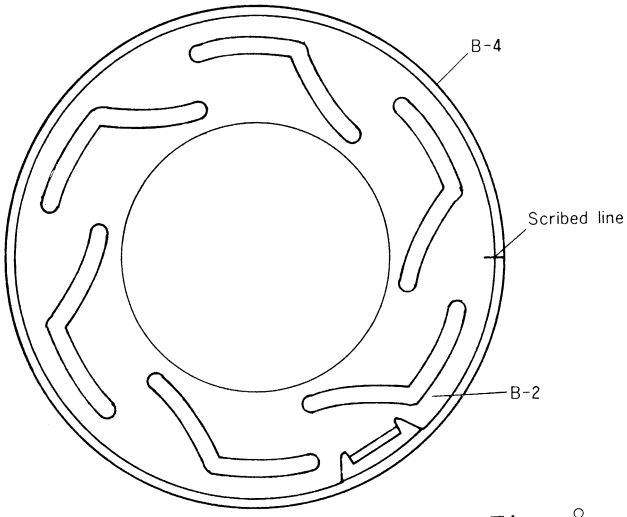 Fig. 8		
14	Helicoid female (B-27) Helicoid male (B-28)	When the helicoid sub-assembly is to be disassembled, put scratches for the positions of the helicoid screws the moment they have gone out of gear with each other.		
		* In principle, do not assemble the zoom sub-assembly (A-43).		

ASSEMBLING PROCEDURES

Seq.	Parts, Sub-Ass'y to be assembled (Fig. No.)	Description	Adhesive Lubricant	Exclusive Tools
1	Turning ring holder (B-1) Turning ring (B-2) Diaphragm blade sub-assy (B-3) Blade case (B-4) No.1 main tube (B-26) 2.0 ø x 2.2 plus pan head screw (B-24)	1. When the blade case sub-assembly is to be disassembled, mark off its position with a scrape knife to facilitate its assembling work. 2. Temporarily stop the 2.0 ø x 2.2 plus pan head screws (B-24).	24-[S640]-(B-26)	
2	V_2 slide barrel (B-23) No.2 main tube (B-22) 2.0 ø x 2.2 plus pan head screw (B-21)	Put the V_2 slide barrel (B-23) with the No.2 main tube (B-22) according to the marking-off line scraped at the time of their disassembling. Put the barrel in gear with the No.1 main tube (B-26) and set the 2.0 ø x 2.2 plus pan head screws (B-21).	(B-23)-G-(B-22) (B-21)-[S640]-(B-26)	
3	Zoom frictional resistor spring (B-20) Zoom frictional resistor (B-19) Zoom working ring (B-18)	1. While the zoom frictional resistor spring (B-20) and zoom frictional resistor (B-19) are depressed, put the zoom working ring (B-18) in gear with the No.1 main tube (B-26). 2. The positions of the zoom working ring (B-18) and No.1 main tube (B-26) are indicated in Fig. 1. Align the curved cam groove and 2.2 tap-hole of the zoom working ring with the straight cam groove and long groove of the No.1 main tube. 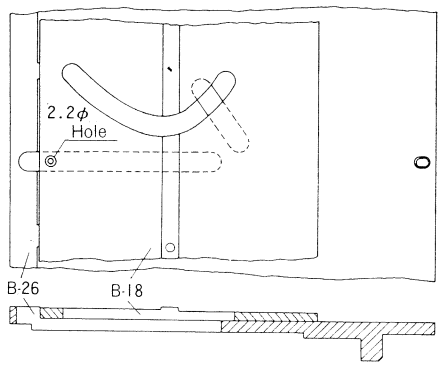 Fig. 1	(B-18)-G-(B-19)	

Seq.	Parts, Sub-Ass'y to be assembled (Fig. No.)	Description	Adhesive Lubricant	Exclusive Tools
4	V_1 slide ring (B-15) V_1 slide ring setscrew (B-14) Cam collar (B-17) Cam collar setscrew (B-16)	1. With the rear edge of the zoom working ring (B-18) aligned with that of the No.1 main tube (B-26), fix the V_1 slide ring (B-15) to the zoom working ring (B-18). 2. After the cam collar (B-17) and the cam collar setscrew (B-16) have been put into position, slide the zoom working ring (B-18) to make sure it properly works.	(B-14)-〔S640〕-(B-18) (B-16)-〔S640〕-(B-23)	
5	Point ring (A-42) Regulation washer (A-41) Out side tube (A-40) 2.0 ø x 3.0 plus pan head screw (A-39) Point ring setscrew (A-37) (A-38)	1. Install the outside tube (A-40) with the No.1 main tube (B-26) and each marked-off assemblies put into position. 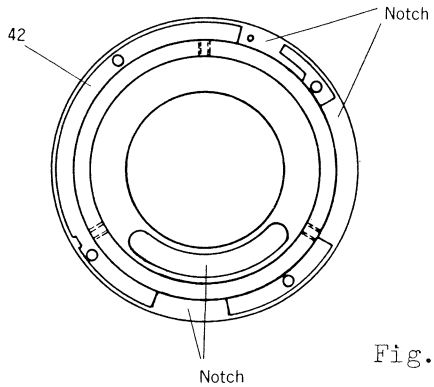 Fig. 2 2. Counter-inset the 2.0 ø x 3.0 plus pan head screws (A-39) and point ring set-screws (A-37) after an *ff* adjustment.	39-〔S640〕-42 37-〔S640〕-40 38-〔S640〕-40	
6	Click spring stud (A-29) Click spring (A-28) 2.0 ø steel ball (A-27) Diaphragm ring (A-26) AE lock lever (A-32) AE lock lever shaft (A-30) AE lock lever spring (A-31)	1. Install the click spring (A-28) as indicated in Fig. 3. 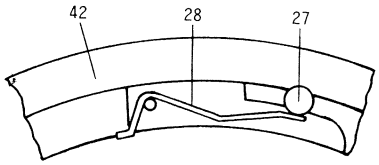 2. Hook the longer AE lock lever spring (A-31) on the AE lock lever (A-32). 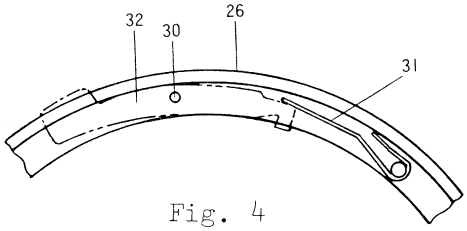 Fig. 4	26-Ⓜ-27	

Seq.	Parts, Sub-Ass'y to be assembled (Fig. No.)	Description	Adhesive Lubricant	Exclusive Tools
7	Lens mount sub-assy (A-25) Diaphragm connection ring sub-assy (A-36) 1.6ø stainless steel ball (A-35) Steel ball set ring (A-34) Main spring (A-33)	1. Make sure that the lens mount sub-assembly (A-25), diaphragm connection ring sub-assembly (A-36) and steel ball set ring (A-34) do not have any scars at the places indicated by the arrows in Fig. 5. If any, replace them with new ones. Oil of any type whatsoever should be applied to the arrow-marked places. 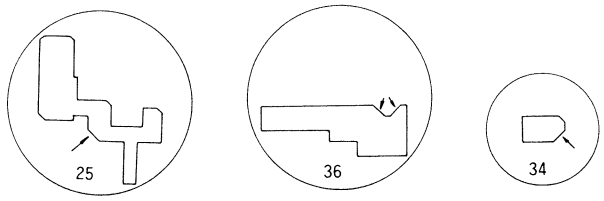 Fig. 5 2. For the insertion of the 1.6ø stainless steel balls (A-35), use a spoon. It is advisable to do this work in a container to prevent a dispersion of the balls. The number of balls inserted is so arranged that there should be room for two or three balls. 3. Slowly screw in the steel ball set ring (A-34) and make sure that it smoothly functions with the play of the diaphragm connection ring sub-assembly (A-36) set within 0.1. 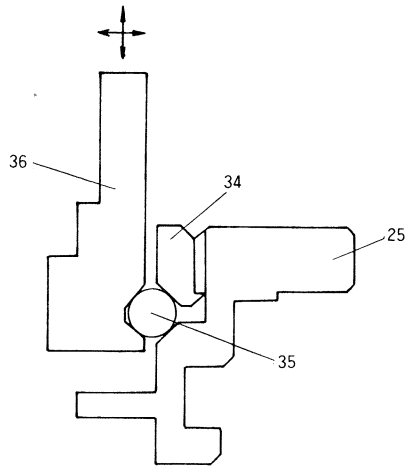 Fig. 6		

Seq.	Parts, Sub-Ass'y to be assembled (Fig. No.)	Description	Adhesive Lubricant	Exclusive Tools
		4. Apply an adhesive agent to the three places indicated in Fig. 7 but to nother places. 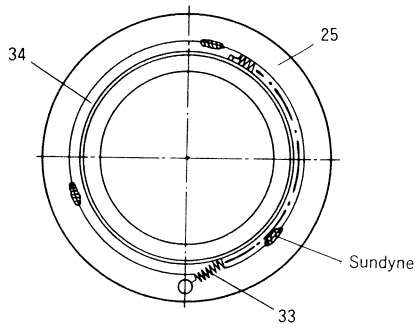 Fig. 7	25-〔S640〕-34	
8	1.7ø x 5.0 plus counter sunk screw (A-24)	1. Install the mount unit with the diaphragm connection plate (B-10) aligned with the turning ring (B-2). 2. Ascertain the functioning of the diaphragm ring (A-26), connection plate (B-12) and AE lock lever (A-32).		
9	Diaphragm diameter adjustment	1. Loosen the 2.0ø x 2.2 plus pan head screw (B-24) and adjust it with the blade case (B-25) set loose. * The aperture diameter decreases with a clockwise rotation of the screw. * The aperture diameter increases with a counter-clockwise rotation of the screw. * There will be no major change in the aperture diameter, as long as it is set according to the marked-off line scraped at the time of disassembling of the blade case. 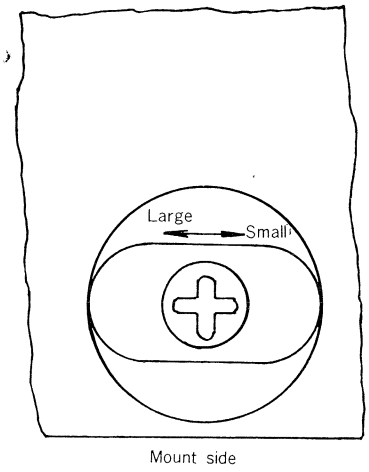 Fig. 8	(B-24)-〔S640〕-(B-26)	

Seq.	Parts, Sub-Ass'y to be assembled (Fig. No.)	Description	Adhesive Lubricant	Exclusive Tools
10	Zoom focus ring (C-5) Focus stopper plate (C-4) Focus stopper setscrew (C-3) Zoom focus connection ring (C-2) Focus stopper pin (C-1) Focusing guide plate (A-22) 2.6ø x 2.0 plus pan head screw (A-21)	1. The relationship between the zoom focus ring (C-5) and the zoom focus connection ring (C-2) is standardized at 29.5mm. 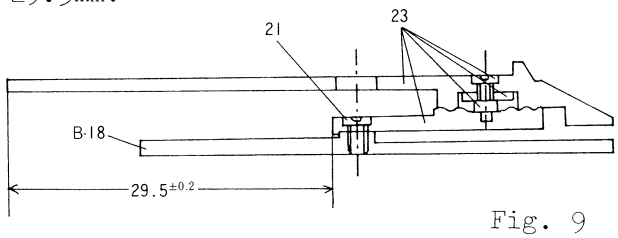 Fig. 9 2. Ascertain the functioning of the zoom focus ring with the zoom focus sub-assembly. 3. The mounting of the zoom working ring (B-18) is such that when the zoom focus ring (A-23) is set to the position of the stopper, the screw-in position of the 2.6ø x 2.8 plus pan head screw (A-21) is aligned. 4. Temporarily fix the focusing guide plate (A-22) to the long groove of the zoom focus sub-assembly (A-23).	(C-3)-[S640]-(C-4) (C-1)-[S640]-(C-2) 21-[S640]-(C-2)	
11	Helicoid female (B-27) Helicoid male (B-28) Point ring setscrew (A-19) Focus guide plate setscrew (A-18)	1. The combination of the helicoid female (B-27) and the helicoid male (B-28) is standardized at 6mm. 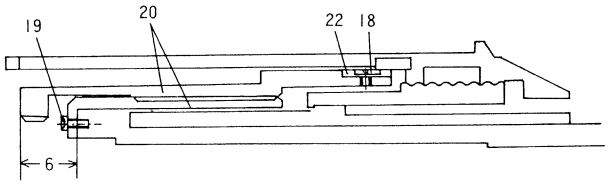 Fig. 10 2. Install the focus guide plate setscrews (A-18) with f = 70mm.	19-[S640]-(B-28) 18-[S640]-22	

Seq.	Parts, Sub-Ass'y to be assembled (Fig. No.)	Description	Adhesive Lubricant	Exclusive Tools
12	Zoom focus ring cover (A-17) Zoom focus ring setscrew (A-15)	Temporarily tighten the zoom focus ring setscrews (A-15).	15-[S640]-17	
13	M lens sub-assy (A-12) M washer (A-13) V_2 lens sub-assy (A-8) V_1 lens sub-assy (A-7) Light shield ring (A-6) Lens hood sub-assy (A-5) FC lens sub-assy (A-4) 1.7Ø x 2.0 round head screw (A-3)	1. Install the M washer, M, V_2, V_1, light shield ring, hood and FC lens sub-assy in the order given. 2. Check the number of washers and ascertain it is the same as counted at the time of disassembling.	3-[S640]-4 6-[S640]-(B-22)	
14	FC adjustment	1. Set f = 70mm for mounting on the camera. 2. Loosen the focus guide plate setscrews (A-18) which has temporarily set the focus guide plate (A-22) and the helicoid sub-assembly (A-20). While looking through the collimeter (∞), turn the helicoid female (the FC lens sub-assembly moves back and forth) and stop it at the optimum focusing. 3. In this state, set f = 150mm and repeat the action in 2, above. 4. Reset to 70mm and repeat the actions in 1 and 2, above.		

Seq.	Parts, Sub-Ass'y to be assembled (Fig. No.)	Description	Adhesive Lubricant	Exclusive Tools
		5. When the view becomes the same with *f* set at 70 and 150mm (an error of less than 0.09mm with the lens focused at *f* 70 and 150mm), tighten the focus guide plate setscrews.	18-[S640]-22	
15	*ff* adjustment	1. When the same number of adjustment washer as counted at the time of disassembling is inserted, *ff* returns to the original position. The adjustment is done in the following manner. 2. Take off the point ring setscrew (A-37). Place the point ring (A-42) in the front. Take off the 2.0ø x 3.0 plus pan head screws (A-39) and make an adjustment with the number of washers between the mount unit and the No.1 main tube (B-26). 3. *ff* Specifications $40.54^{+0.05}_{-0.04}$ Measured with white-light collimeter		
16	Focus ring cover plate (A-16) Zoom focus ring leather (A-14) Engrave ring (A-2) Covered ring (A-11) Covered ring setscrew (A-10)	1. As indicated in Fig. 11, insert the focus ring cover plate (A-16) into the focus ring cover (A-17) at the position of the tap-hole of the zoom focus ring and fasten it with focus ring cover setscrews (A-15). 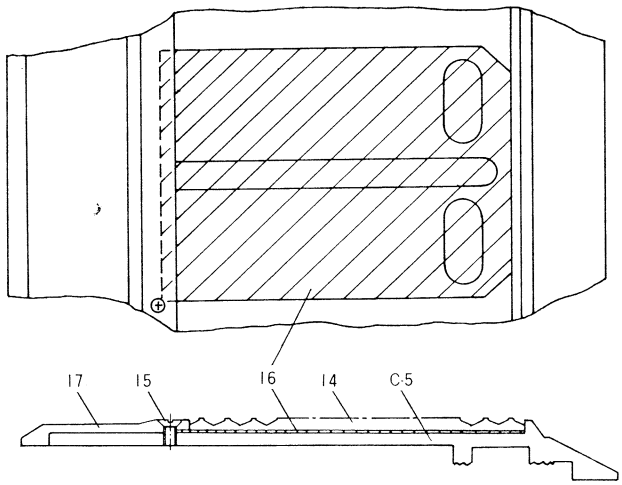 Fig. 11 2. Note the warping of the focus ring cover plate (A-16) when the zoom focus ring leather is installed.		

Seq.	Parts, Sub-Ass'y to be assembled (Fig. No.)	Description	Adhesive Lubricant	Exclusive Tools
		3. Screw in the engrave ring (A-2) with a rubber strip.		
		4. The covered ring setscrews (A-10) should not jut out of the last surface of the lens mount (C-8).	10-[S640]-(C-8)	

Konica 80-200MM/F4

ZOOM HEXANON AR

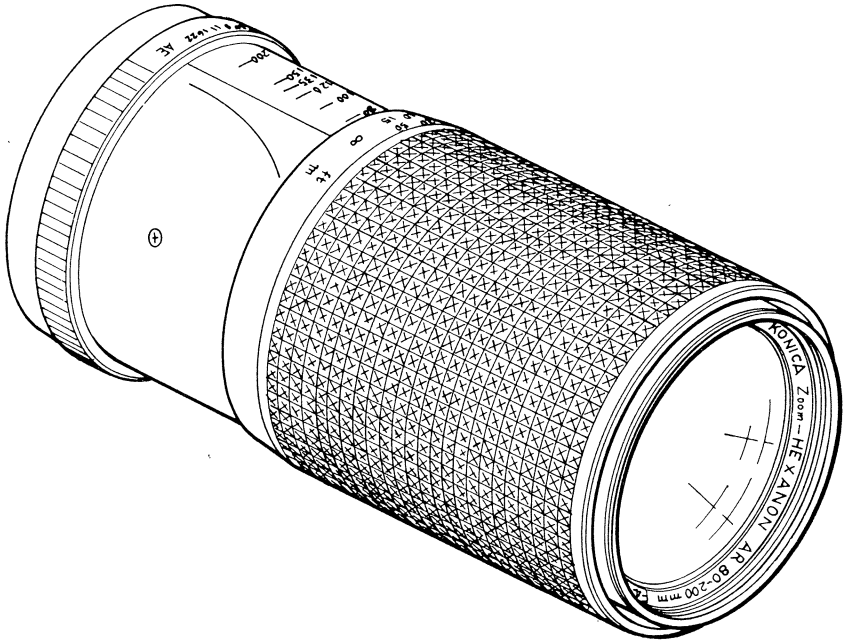

A-1 Konica ZOOM HEXANON AR 80-200MM/F4 MODEL No. 3430

1	2	3	4	5	6
Fig. No.	Parts No. or Sub-assembly	部品・部組名称	Parts name or Sub-assembly name	Note	Disassembling Fig. index
A-1	07951	彫刻リング	Engrave ring		
A-2	701	FCレンズ部組	FC lens sub-assy		C
A-3	07269	ズームフォーカス光皮	Zoom focus ring leather		
A-4	×	ビニールテープ(黒)	Vinyl tape (Black)		
A-5	702	V_1レンズ部組	V_1 lens sub-assy		C
A-6	07971	第7、第8レンズ押え枠	No.7 No.8 lens set ring	〔SB-1〕-07256	
A-7	703	V_2レンズ部組	V_2 lens sub-assy		C
A-8	16535	2.0φ×2.0 剣先ネジ	2.0φ×2.0 Round head screw	〔B.L〕-07311	
A-9	65395	1.7φ×1.8 ナベ小ネジ	1.7φ×1.8 Plus pan head screw	〔SB-1〕-07265	
A-10	07265	ピント板	Focusing plate	(Ph-1)-07267	
A-11	07311	前枠	Front ring		
A-12	66409	1.7φ×2.0 皿小ネジ	1.7φ×2.0 Plus counter sunk screw		
A-13	07410	マウント蓋	Mount cover		
A-14	66325	1.4φ×3.0 皿小ネジ	1.4φ×3.0 Plus counter sunk screw		
A-15	403	化粧リング部組	Covered ring sub-assy		C
A-16	66285	1.4φ×2.0 皿小ネジ	1.4φ×2.0 Plus counter sunk screw		
A-17	07408	遮光筒	Reflection tube		
A-18	66615	2.0φ×5.0 皿小ネジ	2.0φ×5.0 Plus counter sunk screw		
A-19	401	マウント部組	Lens mount sub-assy		C
A-20	07215	ボール押え枠	Steel ball set ring	〔SB-1〕-07401	
A-21	203	接続リング部組	Diaphragm connection ring sub-assy		B
A-22	51159	1.5φ鋼球	1.5φ Steel ball		
A-23	07214	ボールリング	Steel ball ring		
A-24	07159	作動バネ	Main spring	〔SB-1〕< 61465 / 07161	
A-25	301	絞りリング部組	Diaphragm ring sub-assy		C
A-26	07321	AEロックピン	AE lock pin		
A-27	704	Mレンズ部組	M lens sub-assy		C
A-28	07986	調整座金	Adjusting washer	07986 t=0.1 07987 t=0.2 07988 t=0.3 07989 t=0.03 07990 t=0.05	
A-29	67405	1.7φ×2.0 ナベ皿小ネジ	1.7φ×2.0 Plus pan head counter sunk screw		
A-30	07206	1.7φ平小ネジ	1.7φ Flat screw		
A-31	07264	指標リング	Point ring		
A-32	07268	フォーカススケール	Focus scale ring	〔SB-1〕-07267	
A-33	07278	フォーカス押えネジ	Focus ring setscrew	〔SB-1〕-07251	

×:Not supply parts
×:支給対象外部品

For the order model No. of the standard parts use「0001」
標準部品の請求製番は「0001」を使用

Konica ZOOM HEXANON AR 80-200MM/F4

MODEL No. 3430

1	2	3	4	5	6
Fig. No.	Parts No. or Sub-assembly	部品・部組名称	Parts name or Sub-assembly name	Note	Disassembling Fig. index
A-34	07203	本体	Body	〔SB-1〕-07251	
A-35	66435	1.7φ×2.7 皿小ネジ	1.7φ×2.7 Plus counter sunk screw	〔SB-1〕-07203	
A-36	101	羽根ケース部組	Blade case sub-assy		B
A-37	07109	リング押え	Ring holder	〔SB-1〕-07101	
A-38	103	孔座部組	Hole pedestal sub-assy		B
A-39	109V	絞り羽根部組	Diaphragm blade sub-assy	109V 109X 109Z	B
A-40	102	カム座部組	Cam pedestal sub-assy		B
A-41	07106	バネ	Spring		
A-42	07205	ストッパーピン	Stopper pin		
A-43	51209	2.0φ鋼球	2.0φ Steel ball	(D)-07203	
A-44	07326	クリックバネ	Click spring	(D)-07203	
A-45	65275	1.4φ×1.8 ナベ小ネジ	1.4φ×1.8 Plus pan head screw	〔SB-1〕-07203	
A-46	07204	板バネ	Spring plate		
A-47	07278	フォーカス押えネジ	Focus ring setscrew		
A-48	07277	フォーカス押え	Focus ring holder	〔SB-2〕-07267 (Ph-1)-07251	
A-49	267	ズームフォーカス部組	Zoom focus sub-assy		C
A-50	251	ズーム部組	Zoom sub-assy		B

×:Not supply parts

×:支給対象外部品

For the order model No. of the standard parts use「0001」

標準部品の請求製番は「0001」を使用

Konica ZOOM HEXANON AR 80-200MM/F4 A

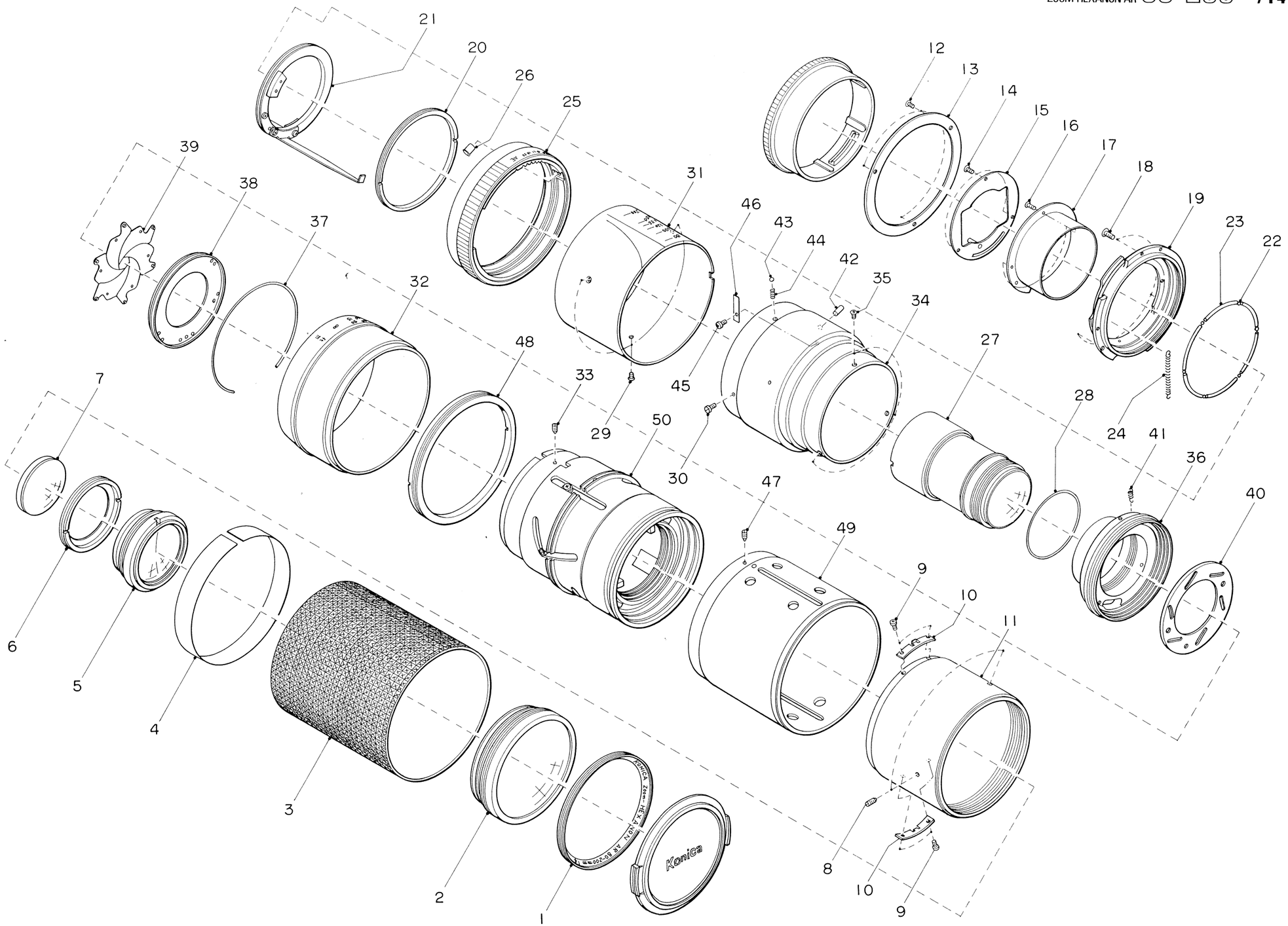

B-1 Konica ZOOM HEXANON AR 80-200MM/F4 MODEL No. 3430

1	2	3	4	5	6
Fig. No.	Parts No. or Sub-assembly	部品・部組名称	Parts name or Sub-assembly name	Note	Disassembling Fig. index
	102	羽根ケース部組	Blade case sub-assy		
B-1	61425	1.7φ×2.5 ナベ小ネジ	1.7φ×2.5 Plus pan head screw	〔SB-1〕-07101	
B-2	×07103	ストッパー	Stopper		
B-3	×07104	バネ掛け	Spring hanger	〔SB-1〕-07101	
B-4	×07101	羽根ケース	Blade case		
	102	カム座部組	Cam pedestal sub-assy		
B-5	×07105	ピン	Pin		
B-6	×07102	カム座	Cam pedestal		
	103	孔座部組	Hole pedestal sub-assy		
B-7	×07108	スペーサー	Spacer		
B-8	×07107	孔座	Hole pedestal		
	109	絞り羽根部組	Diaphragm blade sub-assy	109V 109X 109Z	
B-9	×07112V	羽根ダボ V	Diaphragm blade dowell V	07112V 1.17～1.19φ 07112X 1.19～2.01φ 07112Z 1.15～1.17φ	
B-10	×07111	絞り羽根	Diaphragm blade		
	203	接続リング部組	Diaphragm connection ring sub-assy		
B-11	61465	1.7φ×4.0 ナベ小ネジ	1.7φ×4.0 Plus pan head screw	〔SB-1〕-07210	
B-12	71385	1.4φ×6.0 ナベ小ネジ	1.4φ×6.0 Plus pan head screw	〔SB-1〕-07210	
B-13	×07216	リングストッパー	Ring stopper		
B-14	65425	1.7φ×2.5 ナベ小ネジ	1.7φ×2.5 Plus pan head screw	〔SB-1〕-07210	
B-15	×07231	本体接続板	Connection plate		
B-16	61425	1.7φ×2.5 ナベ小ネジ	1.7φ×2.5 Plus pan head screw	〔SB-1〕-07210	
B-17	×07212	絞り接続板	Diaphragm connection plate		
B-18	×07210	接続リング	Diaphragm connection ring		
	251	ズーム部組	Zoom sub-assy		
B-19	07257	カムカラー止めネジ	Cam collar setscrew	〔SB-2〕<07255 07256	
B-20	07258A	カムカラー A	Cam collar A	07258A 3.97～3.985φ 07258B 3.99～4.005φ 07258C 4.01～4.025φ	
B-21	07255	V_1摺動枠	V_1 Slide ring		
B-22	07256	V_2摺動枠	V_2 Slide ring		
B-23	61455	1.7φ×3.5 ナベ小ネジ	1.7φ×3.5 Plus pan head screw	〔SB-2〕-07253	
B-24	07286	ガイド板B	Guide plate B	07286P For repair	

×:Not supply parts
×:支給対象外部品

For the order model No. of the standard parts use「0001」
標準部品の請求製番は「0001」を使用

Konica ZOOM HEXANON AR 80-200MM/F4

MODEL No. 3430

1	2	3	4	5	6
Fig. No.	Parts No. or Sub-assembly	部品・部組名称	Parts name or Sub-assembly name	Note	Disassembling Fig. index
B-25	07285	ガイド板A	Guide plate A		
B-26	×07276	1.7φ 平小ネジ	1.7φ Flat screw	〔SB-2〕-07253	
B-27	×07253	ズーム作動リング	Zoom working ring	(TG-2) -07251	
B-28	×07262	ヘリコイド雌	Helicoid female	(TG-1) -07261	
B-29	×07261	ヘリコイド雄	Helicoid male	(TG-1) -07262 〔SB-1〕-07251	
B-30	×07251	主胴	Main tube	(TG-2) -07253	

×:Not supply parts
×:支給対象外部品

For the order model No. of the standard parts use「0001」
標準部品の請求製番は「0001」を使用

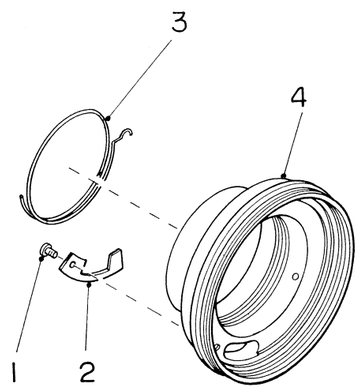

101

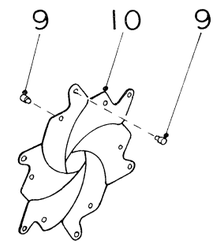

109

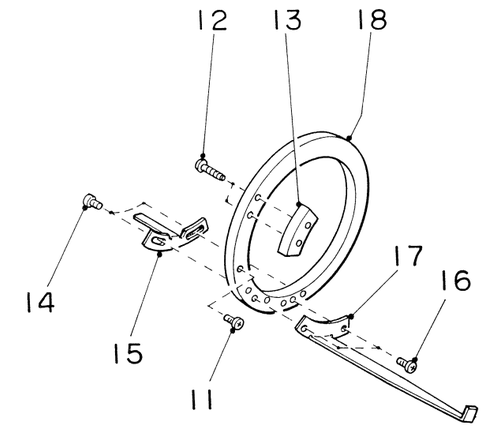

203

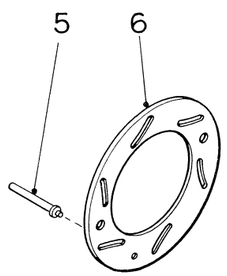

102

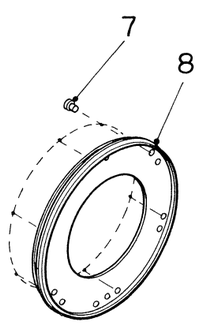

103

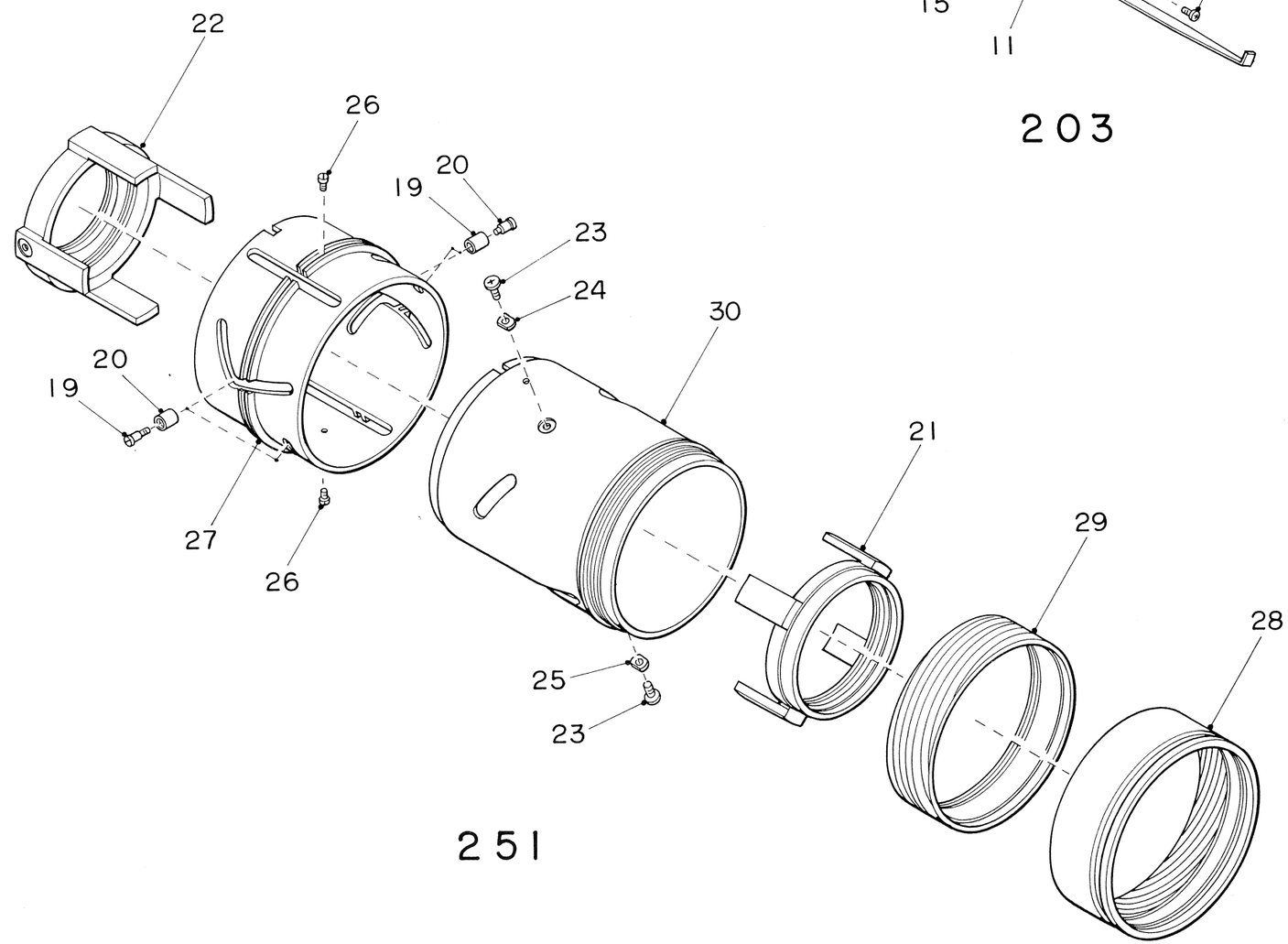

251

Konica ZOOM HEXANON AR 80-200MM/F4

MODEL No. 3430

1	2	3	4	5	6
Fig. No.	Parts No. or Sub-assembly	部品・部組名称	Parts name or Sub-assembly name	Note	Disassembling Fig. index
	267	フォーカスリング部組	Focus ring sub-assy		
C-1	×07276	1.7φ 平小ネジ	1.7φ Flat screw	〔SB-2〕-07267	
C-2	×07267	フォーカスリング	Focus ring		
	301	絞りリング部組	Diaphragm ring sub-assy		
C-3	61445	1.7φ×3.0 ナベ小ネジ	1.7φ×3.0 Plus pan head screw	〔SB-1〕-07301	
C-4	×07340	目盛ストッパー	Diaphragm ring stopper		
C-5	×07301	絞りリング	Diaphragm ring	Ⓓ-07203	
	401	マウント部組	Lens mount sub-assy		
C-6	×07161	作動バネ柱	Main spring stud		
C-7	×07402	1.2φ 平小ネジ	1.2φ Flat screw		
C-8	×07401	マウント	Lens mount		
	403	化粧リング部組	Covered ring sub-assy		
C-9	×07404	F値ピン	F value pin		
C-10	×07403	化粧リング	Covered ring		
	701	FCレンズ部組	FC lens sub-assy		
C-11	×07953	第1レンズ押え枠	Set ring No.1 lens	〔SB-1〕-07952	
C-12	×07901	第1レンズ	No.1 lens		
C-13	×07954	第3レンズ押え枠	Set ring No.3 lens	〔SB-1〕-07952	
C-14	×07903	第3レンズ	No.3 lens		
C-15	×07902	第2レンズ	No.2 lens		
C-16	×07952	FC枠	FC lens barrel	〔SE〕-07311	
	702	V_1レンズ部組	V_1 lens sub-assy		
C-17	×07962	第4レンズ押え枠	Set ring No.4 lens	〔SB-1〕-07961	
C-18	×07904	第4レンズ	No.4 lens		
C-19	×07905	第5レンズ	No.5 lens		
C-20	×07906	第6レンズ	No.6 lens		
C-21	×07961	V_1枠	V_1 lens varrel	〔SE〕-07255	

×:Not supply parts
×:支給対象外部品

For the order model No. of the standard parts use「0001」
標準部品の請求製番は「0001」を使用

Konica ZOOM HEXANON AR 80-200MM/F4

MODEL No. 3430

1	2	3	4	5	6
Fig. No.	Parts No. or Sub-assembly	部品・部組名称	Parts name or Sub-assembly. name	Note	Disassembling Fig. index
	703	V_2レンズ部組	V_2 lens sub-assy		
C-22	×07907	第7レンズ	No.7 lens		
C-23	×07908	第8レンズ	No.8 lens		
	704	Mレンズ部組	M lens sub-assy		
C-24	×07909	第9レンズ	No.9 lens		
C-25	×07981	M枠	M lens barrel	〔SE〕-07101	
C-26	×07910	第10レンズ	No.10 lens		
C-27	×07983	第12レンズ押え枠	Set ring No.12 lens	〔SB-1〕-07982	
C-28	×07912	第12レンズ	No.12 lens		
C-29	×07984	間隔リング	Spacer ring		
C-30	×07911	第11レンズ	No.11 lens		
C-31	×07982	後玉枠	Back lens barrel	〔SB-1〕-07981	

×:Not supply parts
×:支給対象外部品

For the order model No. of the standard parts use「0001」
標準部品の請求製番は「0001」を使用

Konica ZOOM HEXANON AR 80-200MM/F4 C

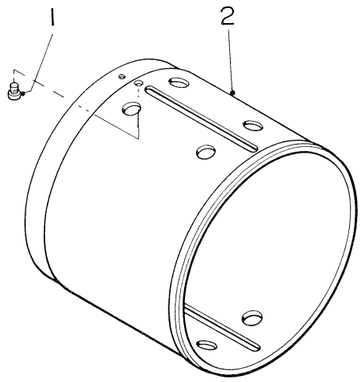

267

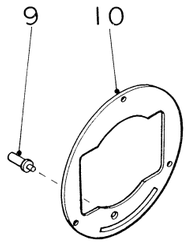

403

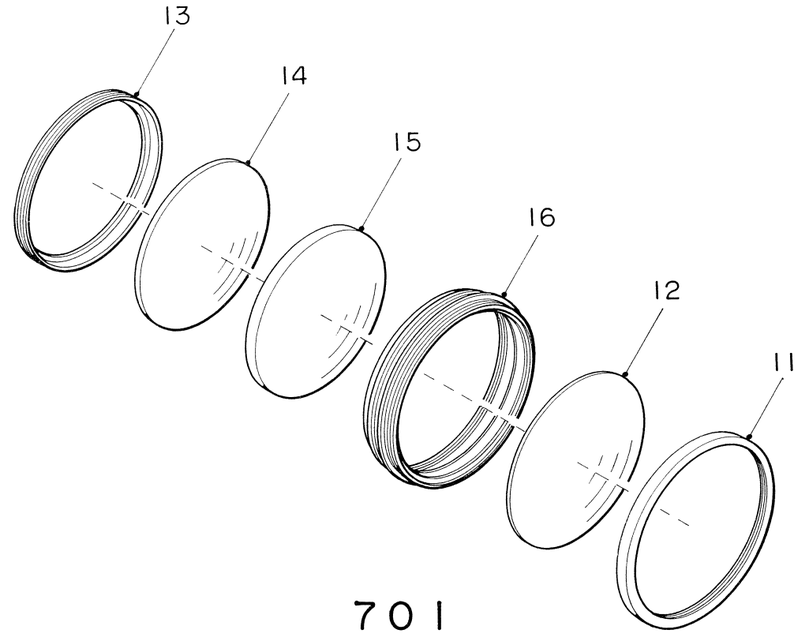

701

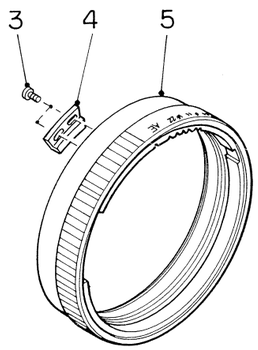

301

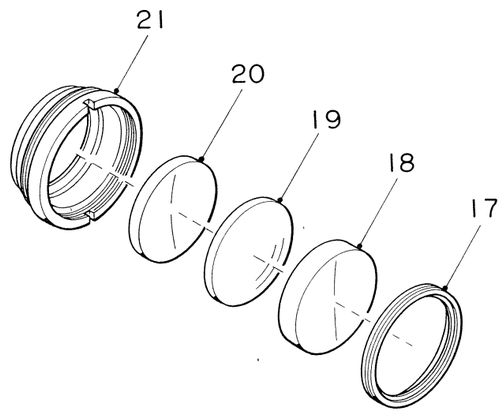

702

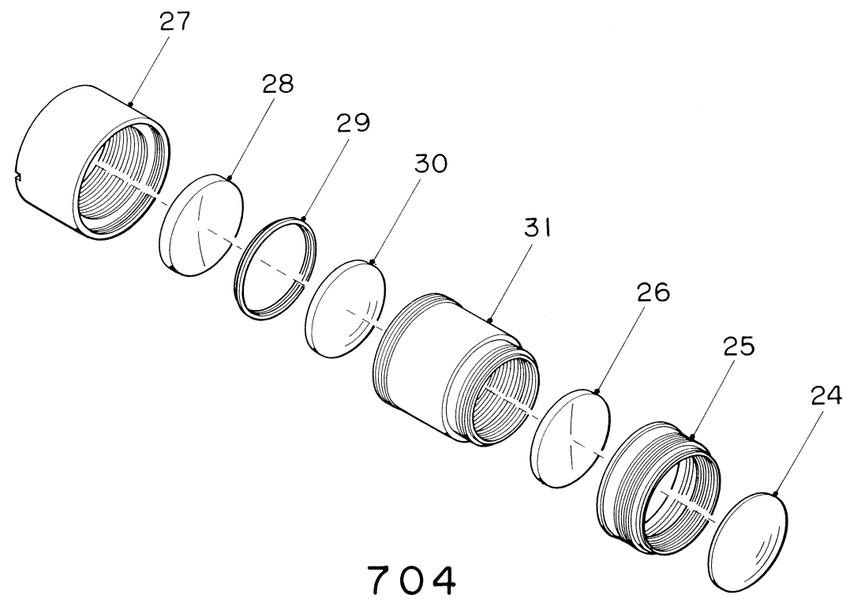

704

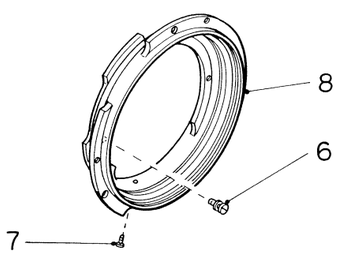

401

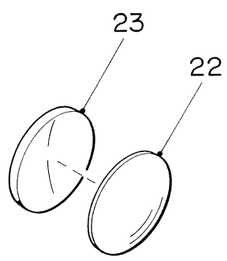

703

DISASSEMBLING PROCEDURES

(SIMPLE DISASSEMBLING PROCEDURE)

ZOOM HEXANON AR 80 ~ 200mm F4 is disassembled completely if disassembled according to the order of Fig. Nos. of the Service Manual. But, here the method of dividing into two parts, viz. zoom working system and diaphragm working system, will be described.

I. Disassembly Procedure

(1) Remove the zoom focus ring leather (A-3), then take off the vinyl tape at part Ⓐ .

(2) Remove the 1.7ø x 2.0 plus pan head counter sunk screw (A-29) of the point ring (A-31).

(3) Applying a solvent onto the groove at part Ⓐ fully, move the focus scale (A-32) to the mount side.

* If difficult to move, give an impact to the focus scale (A-32) with a mallet or the like before moving.

(4) Remove the focus ring setscrew (A-33).

(5) Applying a solvent to part Ⓑ , remove the screw fitting of the main tube (B-30) and blade case (B-4) (turn in a counterclockwise direction).

(6) By splitting into two as above, repairing and adjustment of the zoom working system and diaphragm working system are practicable separately.

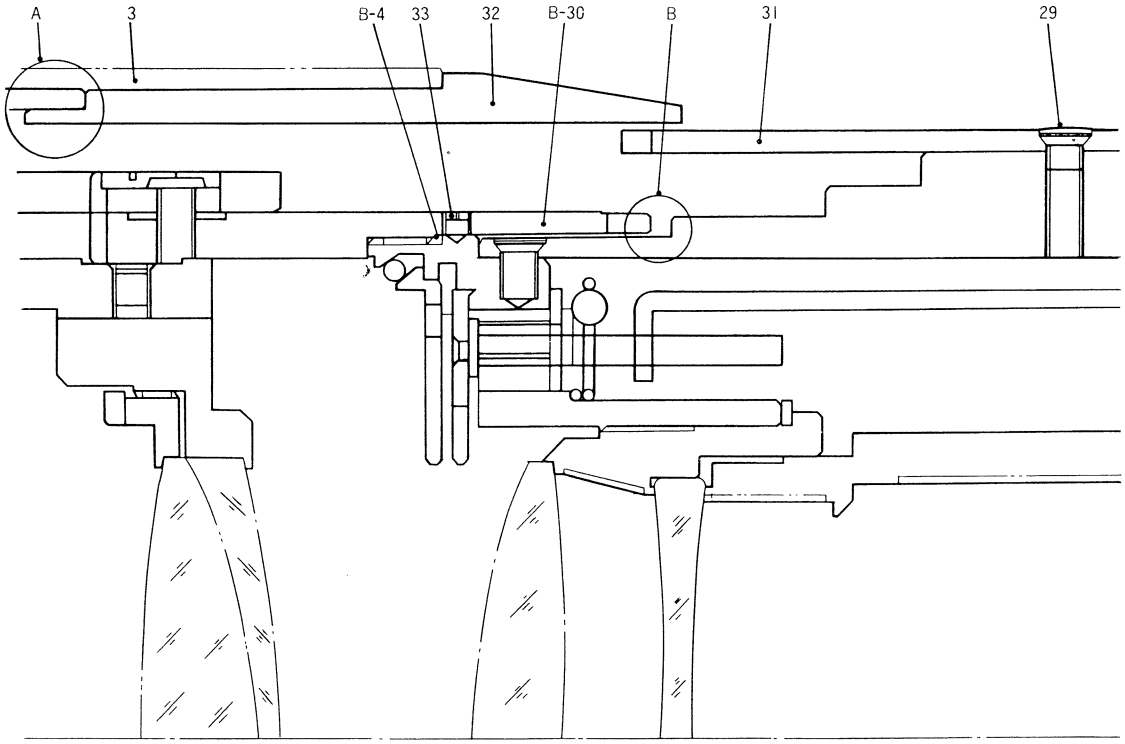

Fig.- 1

II. Symbols for Adhesives, Lubricants and Solvent

[Adhesive]	[Symbol]	[Lubricant]	[Symbol]
Seal End	[SE]	Dow Corning No. BR2-S	(D)
Three Bond 1405D	[SB-1]	Photo Lube Z-1	(Ph-1)
Three Bond 1322	[SB-2]	Helicoid Grease	(TG-1)
Black Lacquer	[B.L]	Helicoid Grease	(TG-2)

[Solvent]	[Symbol]
Thinner	[Th]

Seq.	Parts, Sub-Ass'y to be disassembled (Fig. No.)	Description	Solvent	Exclusive Tools
1	Engrave ring (A-1) FC lens sub-assy (A-2)	1. The engrave ring (A-1) is screwed in the front ring (A-11). Remove by pressing the rubber tool strongly and turning it. Remove the FC lens sub-assy (A-2) similarly. 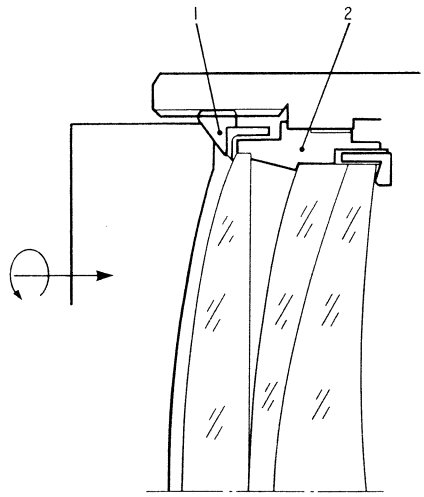 Fig.- 2		Rubber tool
2	Zoom focus ring leather (A-3) V1 lens sub-assy (A-5) No.7 No.8 lens set ring (A-6) V2 lens sub-assy (A-7)	The V1 lens sub-assy (A-5) is screwed in the V1 slide ring (B-21). Remove it with a universal driver. No.7 No.8 lens set ring (A-6) is screwed in the V2 slide ring (B-22). Remove it similarly. 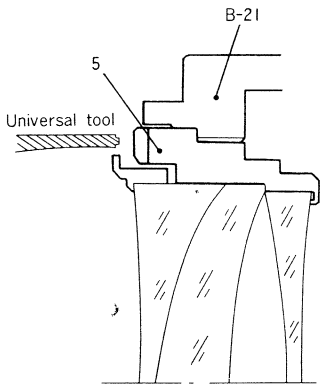 Fig.- 3 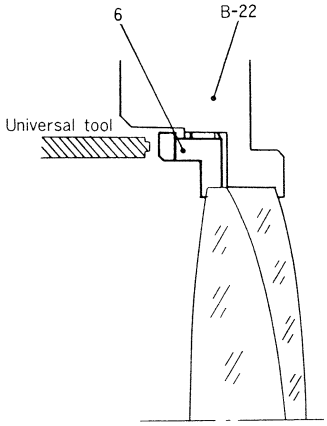 Fig.- 4	Th ↓ 6-(SB-1)-(B-22)	Universal driver

DISASSEMBLING PROCEDURES

Seq.	Parts, Sub-Ass'y to be disassembled (Fig. No.)	Description	Solvent	Exclusive Tools
3	2.0ø x 2.0 round head screw (A-8) 1.7ø x 1.8 plus pan head screw (A-9) Focusing plate (A-10) Front ring (A-11)	1. Actuating the focus ring (C-2) toward the telephoto side, remove the 2.0ø x 2.0 round head screw (A-8). Then, when the front ring (A-11) is set free, remove the 1.7ø x 1.8 plus pan head screw (A-9). Front ring (A-11) is now removed. * Remember to scribed line the positional relationship of the focusing plate (A-10) and the focus ring (C-2). 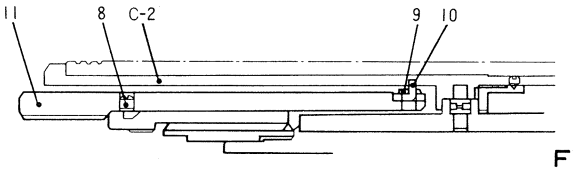 Fig.- 5	Th ↓ 8-(SB-1)-11 Th ↓ 9-(SB-1)-10	
4	1.7ø x 2.0 plus counter sunk screw (A-12) Mount cover (A-13) 1.4ø x 3.0 plus counter sunk screw (A-14) Covered ring sub-assy (A-15) 1.4ø x 2.0 plus counter sunk screw (A-16) Reflection tube (A-17)			
5	2.0ø x 5.0 plus counter sunk screw (A-18) Lens mount sub-assy (A-19) Steel ball set ring (A-20) Diaphragm connection ring sub-assy (A-21)	1. The diaphragm connection ring sub-assy (A-21) be removed preferably in an adequate vessel in order to prevent scattering of steel balls (A-22) and steel ball ring (A-23). 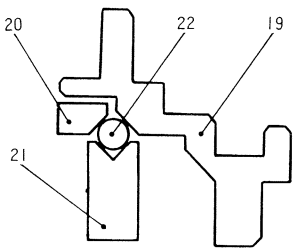 Fig.- 6	Th ↓ 20-(SB-1)-(C-8)	Univer-sal driver

Seq.	Parts, Sub-Ass'y to be disassembled (Fig. No.)	Description	Solvent	Exclusive Tools
	1.5 ø steel ball (A-22) Steel ball ring (A-23)			
6	Main spring (A-24) Diaphragm ring sub-assy (A-25) AE lock pin (A-26)		Th ↓ (B-11)-[SB-1]-(C-6)	
7	M lens sub-assy (A-27) Adjusting washer (A-28)	1. The M lens sub-assy (A-27) is screwed in the blade case (B-4). Remove it with a universal driver used. In front of the M lens sub-assy (A-27) are positioned ff adjusting washers (A-28). Check their number and thickness, and handle them carefully so that they are not bent.		Universal driver
8	1.7 ø x 2.0 plus pan head counter sunk screw (A-29) 1.7 ø flat screw (A-30) Point ring (A-31) Focus scale ring (A-32) Focus ring setscrew (A-33) Body (A-34)	1. Removing the 1.7 ø x 2.0 plus pan head counter sunk screw (A-29), pull the point ring (A-31) out toward the mount side. 2. Applying the solvent all over the groove A of the focus scale ring (A-32) and the focus ring (C-2), remove the focus scale ring (A-32). * If not removed readily, give an impact lightly with a mallet or the like. Then, the focus scale ring will be removed readily. 3. Remove the focus ring setscrew (A-33), apply the solvent to part Ⓑ, and turning the body (A-34) counterclockwise, remove it. 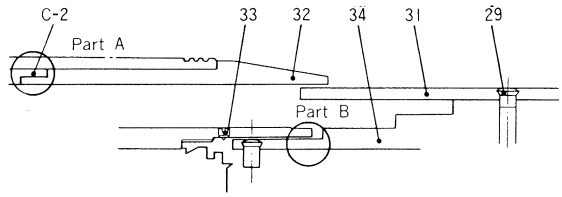 Fig.- 7	Th ↓ 32-[SB-1]-(C-2) Th ↓ 33-[SB-1]-(B-30) Th ↓ 34-[SB-1]-(B-30)	

Seq.	Parts, Sub-Ass'y to be disassembled (Fig. No.)	Description	Solvent	Exclusive Tools
9	1.7 ø x 2.7 plus counter sunk screw (A-35) Blade case sub-assy (A-36) Ring holder (A-37) Hole pedestal sub-assy (A-38) Diaphragm blade sub-assy (A-39) Cam pedestal sub-assy (A-40) Spring (A-41)	1. Removing the 1.7 ø x 2.7 plus counter sunk screw (A-35), take the blade case sub-assy (A-36) out. * Remember to scribed line the positional relationship of the blade case sub-assy (A-36) and the body (A-34). 2. Remove the ring holder (A-37), then scribed line the hole pedestal sub-assy (A-38) and blade case sub-assy (A-36), remove the diaphragm blade sub-assy (A-39). 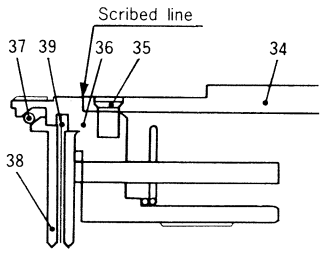 Fig.- 8 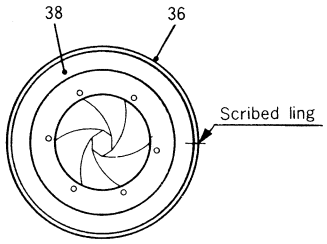 Fig.- 9	Th ↓ 34-(SB-1)-35 Th ↓ 37-(SB-1)-(B-4)	
10	Stopper pin (A-42) 2.0 ø steel ball (A-43) Click spring (A-44) 1.4 ø x 1.8 plus pan head screw (A-45) Spring plate (A-46)		Th ↓ 34-(SB-1)-45	
11	Focus ring setscrew (A-47) Focus ring holder (A-48) Zoom focus sub-assy (A-49) Zoom sub-assy (A-50)	1. Remove the focus ring setscrew (A-47), then applying the solvent in a rather great quantity to part (A), remove the focus ring holder (A-48) with a special tool (Focus ring holder spanner). 2. Zoom focus sub-assy (A-49) is removed at a certain position. 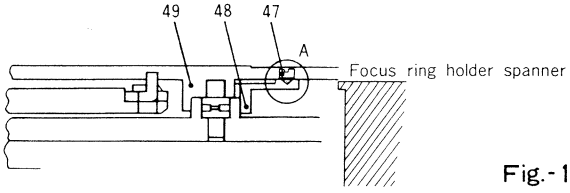 Fig.-10	Th ↓ 48-(SB-2)-(C-2)	Special tool

Seq.	Parts, Sub-Ass'y to be disassembled (Fig. No.)	Description	Solvent	Exclusive Tools
12	1.7ø x 4.0 plus pan head screw (B-11) 1.4ø x 6.0 plus pan head screw (B-12) Ring stopper (B-13) 1.7ø x 2.5 plus pan head screw (B-14) Connection plate (B-15) 1.7ø x 2.5 plus pan head screw (B-16) Diaphragm connection plate (B-17) Diaphragm connection ring (B-18)	1. When the connection plate (B-15) is removed, be sure to have the positional relationship set forth clearly with marking lines scribed on the connection ring in use of the end faces of the connection plate (B-15). 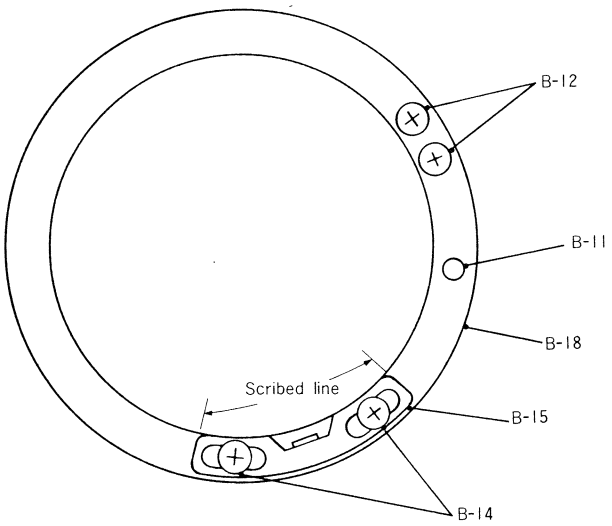 Fig.-11	Th → (B-11)-[SB-1]-(B-18) Th → (B-13)-[SB-1]-(B-18) Th → (B-14)-[SB-1]-(B-18) Th → (B-16)-[SB-1]-(B-18)	
13	Cam collar setscrew (B-19) Cam collar A (B-20) V1 slide ring (B-21) V2 slide ring (B-22) 1.7ø x 3.5 plus pan head screw (B-23) Guide plate B (B-24) Guide plate A (B-25) 1.7ø flat screw (B-26)	1. The cam collar setscrew (B-19) fixing the cam collar A (B-20) is in use of screw lock super (adhesive). Take it out with care so that the screw is not broken. 2. Guide plate B (B-24) and guide plate A (B-25) are of the same shape but are different in the screw hold diameter. Take care so that the fitting positions are identified clearly. 3. When the helicoid part is disassembled, be sure to have the positional relationship of the helicoid screw when it is disengaged set forth clearly with a marking line scribed. 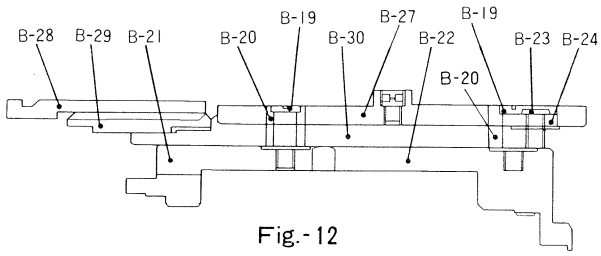 Fig.-12	Th → (B-19)-[SB-2]-(B-21)(B-22) Th → (B-23)-[SB-2]-(B-27) Th → (B-26)-[SB-2]-(B-27)	

DISASSEMBLING PROCEDURES

Seq.	Parts, Sub-Ass'y to be disassembled (Fig. No.)	Description	Solvent	Exclusive Tools
	Zoom working ring (B-27) Helicoid female (B-28) Helicoid male (B-29) Main tube (B-30)		Th ↓ (B-29)-〔SB-1〕-(B-30)	

ASSEMBLING PROCEDURES

Seq.	Parts, Sub-Ass'y to be assembled (Fig. No.)	Description	Adhesive Lubricant	Exclusive Tools
1	Diaphragm connection ring (B-18) Diaphragm connection plate (B-17) 1.7 ø x 2.5 plus pan head screw (B-16) Connection plate (B-15) 1.7 ø x 2.5 plus pan head screw (B-14) Ring stopper (B-13) 1.4 ø x 6.0 plus pan head screw (B-12) 1.7 ø x 4.0 plus pan head screw (B-11)	1. Connection plate (B-15) be first adjusted to the marking lines on the diaphragm connection ring (B-18) and fastened with the 1.7 ø x 2.5 plus pan head screw (B-14), then screw lock be made.	(B-16)-[SB-1]-(B-18) (B-14)-[SB-1]-(B-18) (B-12)-[SB-1]-(B-18) (B-11)-[SB-1]-(B-18)	
2	Main tube (B-30) Helicoid male (B-29) Helicoid female (B-28) Zoom working ring (B-27) 1.7 ø flat screw (B-26) Guide plate A (B-25) Guide plate B (B-24)	1. The main tube (B-30) and zoom working ring (B-27) be assembled in such a way that the 3mm width is of the same position. 2. Guide plate B (B-24) be set on the side of the 3mm width of the zoom working ring (B-27) with 1.7 ø flat screw (B-26). Guide plate A (B-25) be set on the other side. 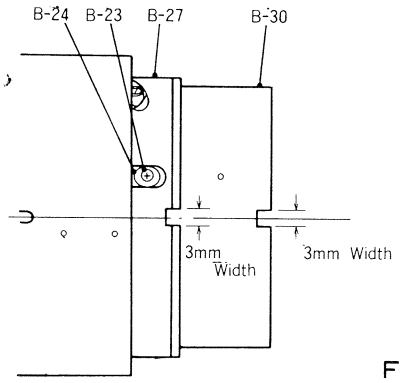 Fig.- 1 * Countermeasure to gravity fall of zoom If the gravity fall of the zoom is excessive, change the guide plate B	(B-30)-(TG-2)-(B-27) (B-29)-(TG-1)-(B-28) (B-29)-[SB-1]-(B-30) (B-28)-(TG-1)-(B-29) (B-27)-(TG-2)-(B-30) (B-26)-[SB-2]-(B-27)	

Seq.	Parts, Sub-Ass'y to be assembled (Fig. No.)	Description	Adhesive Lubricant	Exclusive Tools
		(B-24) to guide plate P (B-24), and adjust by the extent of fastening the 1.7 ø flat screw (B-26) (extending the width of the guide plate P). Gravity fall is correctable, without disassembly, by removing the zoom focus ring leather (A-3) and using the hole in the focus ring (C-2).		
3	1.7 ø x 3.5 plus pan head screw (B-23) V2 slide ring (B-22) V1 slide ring (B-21) Cam collar A (B-20) Cam collar setscrew (B-19)	1. Insert the V2 slide ring (B-22) and V1 slide ring (B-21) into the zoom working ring (B-27), then set the cam collar A (B-20) with cam collar setscrew (B-19). * If zoom chattering is excessive, choose an adequate cam collar among three kinds of cam collars, and change.	(B-23)-[SB-2]-(B-27) (B-19)-[SB-2]-(B-21)(B-22)	
4	Zoom sub-assy (A-50) Zoom focus sub-assy (A-49) Focus ring holder (A-48) Focus ring setscrew (A-47)	1. Assemble the zoom focus sub-assy (A-49) to the zoom sub-assy (A-50). Here, when the focus ring is at ∞ stop, the 1.7ø flat screw (C-1) should be on the side of the 3mm width of the main tube (B-30). B-30 3mm Width 3mm Width C-1 A-49 Fig.- 2 2. Applying a lubricant to the inside of the focus ring holder (A-48), adjust the fitting condition of the zoom focus sub-assy (A-49) to the zoom sub-assy (A-50) by the threading of the focus ring holder. 3. Set the screw of the focus ring holder temporarily, then fix it with the screw lock.	48-[SB-2]-(C-2) 48- Ph-1 -(B-30)	Special tool

ASSEMBLING PROCEDURES

Seq.	Parts, Sub-Ass'y to be assembled (Fig. No.)	Description	Adhesive Lubricant	Exclusive Tools
5	Spring plate (A-46) 1.4 ø x 1.8 plus pan head screw (A-45) Click spring (A-44) 2.0 ø steel ball (A-43) Stopper pin (A-42)		34-(SB-1)-45 34- Ⓓ -44 34- Ⓓ -43	
6	Spring (A-41) Cam pedestal sub-assy (A-40) Diaphragm blade sub-assy (A-39) Hole pedestal sub-assy (A-38) Ring holder (A-37) Blade case sub-assy (A-36)	1. Set the diaphragm blade sub-assy (A-39) to the cam pedestal sub-assy (A-40), then assemble the hole pedestal sub-assy (A-38) according to the marking lines at the time of disassembly, and set it with the ring holder (A-37). Diaphragm diameter (without lens) F№ / D (mm) F 4 / 26.2ø F 5.6 / 18.7ø F 8 / 13.1ø F 11 / 9.2ø F 16 / 6.5ø F 22 / 4.6ø 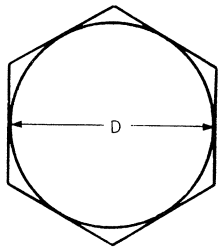 Fig.- 3	37-(SB-1)-(B-4)	
7	1.7 ø x 2.7 plus counter sunk screw (A-35) Body (A-34) Focus ring setscrew (A-33) Focus scale ring (A-32)	1. Set the diaphragm blade parts (sub-assys) to the body (A-34), and set it with the 1.7 ø x 2.7 plus counter sunk screw (A-35). 2. Set the focus scale ring (A-32) to the zoom focus sub-assy (A-49), then screw the body (A-34) into the zoom sub-assy (A-50). 3. A drill hole for focus ring setscrew (A-33) is provided in the blade case sub-assy (A-36) set at the position. If the position is deviated, drill holes with a 1.2 ø drill, and set the focus ring set screw (A-33) again.	34-(SB-1)-35 34-(SB-1)-(B-30) 33-(SB-1)-(B-30)	

Seq.	Parts, Sub-Ass'y to be assembled (Fig. No.)	Description	Adhesive Lubricant	Exclusive Tools
8	Point ring (A-31) 1.7 ø flat screw (A-30) 1.7 øx 2.0 plus pan head counter sunk screw (A-29)			
9	Adjusting washer (A-28) M lens sub-assy (A-27)	1. Insert the adjusting washers (A-28) checked at the time of disassembly before the M lens sub-assy (A-27).		Universal driver
10	AE lock pin (A-26) Diaphragm ring sub-assy (A-25)	1. Assemble the AE lock pin (A-26) to the diaphragm ring sub-assy (A-25), then set the diaphragm ring sub-assy (A-25) to the body (A-34).		
11	Main spring (A-24) Steel ball ring (A-23) 1.5ø steel ball (A-22) Diaphragm connection ring sub-assy (A-21) Steel ball set ring (A-20) Lens mount sub-assy (A-19) 2.0 øx 5.0 plus counter sunk screw (A-18)	1. See that the lens mount sub-assy (A-19) and diaphragm connection ring sub-assy (A-21) have no scar at the parts shown by arrow in the diagrams below. If damaged, change with a new part. Further, whatever kind of oil should not be applied to the parts shown by arrow. 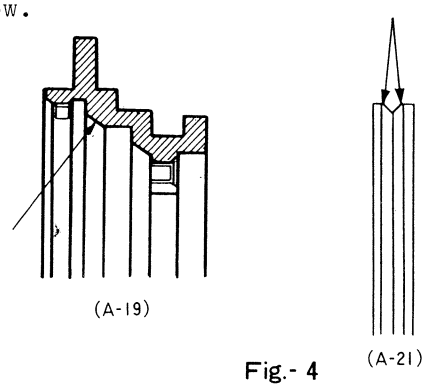 (A-19) (A-21) Fig.- 4 2. Main spring (A-24) should be set with an adhesive after assembly.	24-(SB-1)<(B-11)(C-6) 20-(SB-1)-(C-8)	Universal driver

Seq.	Parts, Sub-Ass'y to be assembled (Fig. No.)	Description	Adhesive Lubricant	Exclusive Tools
12	Reflection tube (A-17) 1.4 ø x 2.0 plus counter sunk screw (A-16) Covered ring sub-assy (A-15) 1.4 ø x 3.0 plus counter sunk screw (A-14) Mount cover (A-13) 1.7 ø x 2.0 plus counter sunk screw (A-12)			
13	Front ring (A-11) Focusing plate (A-10) 1.7 ø x 1.8 plus pan head screw (A-9) 2.0 ø x 2.0 round head screw (A-8)	1. Set the focusing plate (A-10) into the slot in the zoom focus sub-assy (A-49). 2. Set the focus ring to the telephto side. 3. Insert the front ring (A-11) into the helicoid female (B-28). 4. Set the focusing plate (A-10) at the position marked at the time of disassembly. 5. Set the 2.0 ø x 2.0 round head screw temporarily. 6. The focusing plate (A-10) be adjusted by extending the 2.2 width part, when the chattering in the direction of rotation of the focus ring. 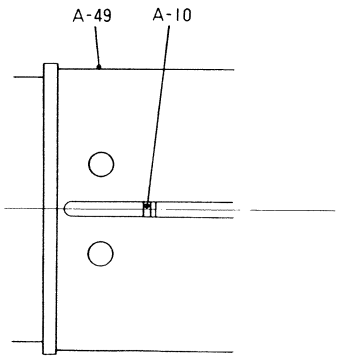 Fig.- 5	10-(Ph-1)-(C-2) 9-[SB-1]-10 8-[B.L]-11	

ASSEMBLING PROCEDURES

Seq.	Parts, Sub-Ass'y to be assembled (Fig. No.)	Description	Adhesive Lubricant	Exclusive Tools
14	V2 lens sub-assy (A-7) No.7 No.8 lens set ring (A-6) V1 lens sub-assy (A-5) Zoom focus ring leather (A-3)	1. Taking care of stain, dust, etc. on the lens, set the V2 lens sub-assy (A-7), No.7 No.8 lens set ring (A-6) and V1 lens sub-assy (A-5) in the order listed with a universal driver used.	6-(SB-1)-(B-22)	Universal driver
15	FC lens sub-assy (A-2) Engrave ring (A-1)	1. Set the FC lens sub-assy (A-2) then engrave ring (A-1) with a rubber tool used.		Rubber tool
16	FC adjustment	1. Fit to the camera, and set to f = 200mm. 2. Release the 2.0 ø x 2.0 round head screw (A-8), and under such condition, turn the helicoid female (FC lens sub-assy moving back and forth), and observing the collimeter (∞), stop the helicoid female at the best focusing position. 3. Then, setting to f = 80mm, repeat the procedure of paragraph 2. 4. Set again to f = 200mm, and repeat the procedures of paragraph 1 et seq. 5. Set with the screw at the position where the sights at f = 200mm and f = 80mm are equal.		
17	*ff* adjustment	1. When the adjusting washers (A-28) are itroduced in the same quantity to that at the time of disassembly, *ff* is restored as before, and the adjustment be made according to the following procedure. 2. Removing the 1.4 ø x 3.0 plus counter sunk screw (A-14) and covered ring sub-assy (A-15), adjust with the quantity of the washers between the M lens sub-assy (A-27) and the blade case sub-assy (A-36).		

ASSEMBLING PROCEDURES

Seq.	Parts, Sub-Ass'y to be assembled (Fig. No.)	Description	Adhesive Lubricant	Exclusive Tools
		3. *ff* standards f=80mm $40.52^{+0.1}_{-0.02}$ f=200mm $40.52^{+0.15}_{-0.02}$		

UC ZOOM HEXANON AR

80-200 mm F4 (Automatic)

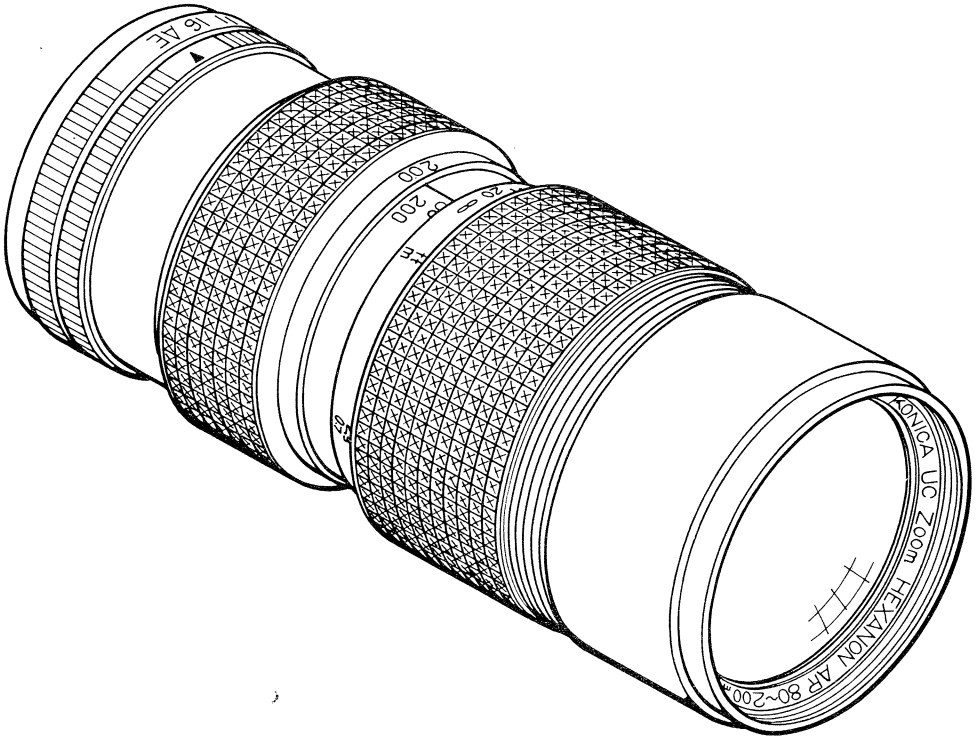

UC ZOOM HEXANON AR
80-200 mm F4 (Automatic)

MODEL No. 3596

1	2	3	4	5
Fig. No.	Parts No. or Sub-assembly	部品・部組名称	Parts name or Sub-assembly name	Note
A-1	501	レンズキャップ部組	Lens cap sub-assy	
	X 07501	レンズキャップ	Lens cap	
	X 07502	キャップバネ	Lens cap spring	
	X 07503	ネームプレート	Name plate	
A-2	07951	彫刻リング	Engraved ring	
A-3	16265	1.4φ×1.6 剣先ネジ	1.4φ×1.6 Round head screw	[S640]-07311
A-4	07311	前　筒	Front tube	
A-5	531	フード部組	Lens hood sub-assy	
	X 07531	フード	Lens hood	
	X 07532	フード用ビロード	Cloth lining to lens hood	
A-6	16445	1.7φ×3.0 剣先ネジ	1.7φ×3.0 Round head screw	[S640]-07217
A-7	701	FCレンズ部組	FC lens sub-assy	
	X 07901	第1レンズ	No.1 lens	
	X 07902	第2レンズ	No.2 lens	
	X 07903	第3レンズ	No.3 lens	
	X 07952	FC枠	Front lens barrel	
	X 07953	FC間隔リング	Spacer ring for FC lens	
	X 07954	第3レンズ押え	Set ring for No.3 lens	
A-8	702	V_1レンズ部組	V_1 lens sub-assy	
	X 07904	第4レンズ	No.4 lens	
	X 07905	第5レンズ	No.5 lens	
	X 07906	第6レンズ	No.6 lens	
	X 07961	V_1枠	V_1 lens barrel	
	X 07962	第5レンズ押え	Set ring for No.5 lens	
A-9	07963	V_1調整座金 t=0.1	Regulating washer t=0.1 for V_1	
A-10	07964	V_1調整座金 t=0.2	Regulating washer t=0.2 for V_1	
A-11	703	V_2レンズ部組	V_2 lens sub-assy	
	X 07907	第7レンズ	No.7 lens	
	X 07908	第8レンズ	No.8 lens	
	X 07971	V_2枠	V_2 lens barrel	
	X 07972	レンズ押えバネ	Set spring for No.8 lens	
A-12	07219	フォーカス光皮	Leather (focus ring)	

UC ZOOM HEXANON AR
80-200 mm F4 (Automatic)

MODEL No. 3596

1	2	3	4	5
Fig. No.	Parts No. or Sub-assembly	部品・部組名称	Parts name or Sub-assembly name	Note
A-13	16405	1.7φ×2.0 剣先ネジ	1.7φ×2.0 Round head screw	〔S640〕-07217
A-14	63455	1.7φ×3.5 皿小ネジ	1.7φ×3.5 Counter sunk screw	〔S640〕-07251
A-15	202	ヘリコイド部組	Helicoid sub-assy	
	X 07201	ヘリコイド雄	Helicoid male	Ⓖ-07217
	07208	フォーカスストッパA	Focus ring stopper A	〔S640〕-07201
	07209	フォーカスストッパB	Focus ring stopper B	〔S640〕-07217
	X 07217	フォーカスリング	Focus ring	Ⓖ-07201
A-16	07218	距離目盛リング	Distance scale ring	
A-17	07205	中胴カバー	Inside tube cover	〔S640〕-07203
A-18	61605	2.0φ×4.5 平小ネジ	2.0φ×4.5 Flot screw	〔S640〕-07151
A-19	07221	ff調整座金 t=0.03	Regulating washer t=0.03 for ff	
	07222	ff調整座金 t=0.05	Regulating washer t=0.05 for ff	
	07223	ff調整座金 t=0.1	Regulating washer t=0.1 for ff	
	07224	ff調整座金 t=0.2	Regulating washer t=0.2 for ff	
	07225	ff調整座金 t=0.5	Regulating washer t=0.5 for ff	
A-20	07203	取付座	Outside tube	
A-21	704	マスターレンズ部組	Master lens sub-assy	
	X 07909	第9レンズ	No. 9 lens	
	X 07910	第10レンズ	No.10 lens	
	X 07911	第11レンズ	No.11 lens	
	X 07912	第12レンズ	No.12 lens	
	X 07913	第13レンズ	No.13 lens	
	X 07914	第14レンズ	No.14 lens	
	X 07981	マスター枠 A	Master barrel A	
	X 07982	マスター枠 B	Master barrel B	
	X 07983	第11レンズ押え	Set ring for No.11 lens	
	X 07984	マスター間隔リングA	Master spacer ring A	
	X 07985	マスター間隔リングB	Master spacer ring B	
	X 07986	第14レンズ押え	Set ring for No.14 lens	
A-22	07511	マウントキャップ	Lens mount cap	
A-23	13133	1.2φ×1.4 皿小ネジ	1.2φ×1.4 Counter sunk screw	〔S640〕-07401
A-24	403	化粧板部組	Covered plate sub-assy	
	X 07403	化粧板	Covered plate	

UC ZOOM HEXANON AR
80-200 mm F4 (Automatic)

MODEL No.3596

1	2	3	4	5
Fig. No.	Parts No. or Sub-assembly	部品・部組名称	Parts name or Sub-assembly name	Note
	✕ 07407	F値ピン	F value pin	
A-25	63459	1.7φ×3.5 皿小ネジ	1.7φ×3.5 Counter sunk screw	〔S640〕-07203
A-26	401	マウント部組	Lens mount sub-assy	
	✕ 07401	マウント	Lens mount	
	✕ 07402	マウント制限ピン	Lens mount limitation pin	
A-27	61295	1.4φ×2.2 平小ネジ	1.4φ×2.2 Flat screw	〔S640〕-07308
A-28	07308	マニュアルストッパー	Manual stopper	
A-29	07324	AEロックレバー軸	Set screw for AE lock lever	
A-30	07326	AEロックバネ	Spring for AE lock lever	
A-31	323	AEロックレバー部組	AE lock lever sub-assy	
	✕ 07323	AEロックレバー	AE lock lever	
	✕ 07325	AEロックレバーバネ掛	Spring stud for AE lock lever	
A-32	321	AEロック釦部組	AE lock button sub-assy	
	✕ 07321	AEロック釦	AE lock button	
	✕ 07322	AEロック連動ピン	Connection pin for AE lock	
A-33	07306	クリックバネ押え	Cap for click spring	〔S640〕-07301
A-34	07305	クリックバネ	Click spring	
A-35	51169	1.6φ 鋼球	1.6φ steel ball	Ⓖ—07303, 07304
A-36	07301	絞りリング	Diaphragm ring	Ⓖ-07203
A-37	63295	1.4φ×2.2 皿小ネジ	1.4φ×2.2 Counter sunk screw	
A-38	07303	クリック板 A	Click plate A	
A-39	07304	クリック板 B	Click plate B	
A-40	07268	ズーム光皮	Leather (Zoom ring)	
A-41	16425	1.7φ×2.5 剣先ネジ	1.7φ×2.5 Round head screw	〔S640〕-07267
A-42	07267	ズームリング	Zoom ring	
A-43	61585	2.0φ×3.5 平小ネジ	2.0φ×3.5 Flat screw	〔S640〕-07251
A-44	07221～5	ff調整座金	Regulating washer for ff	A-19

UC ZOOM HEXANON AR
80-200 mm F4 (Automatic)

MODEL No. 3596

1	2	3	4	5
Fig. No.	Parts No. or Sub-assembly	部品・部組名称	Parts name or Sub-assembly name	Note
A-45	251	ズーム部組	Zoom tube sub-assy	
	X 07251	主 胴	Main tube	Ⓖ—07252, 07255, 07256
	X 07252	ズーム回転胴	Turning ring for zoom	Ⓖ—07251, 07270
	X 07253	反射防止板	Plate for absorbed reflection	
	X 07255	V_1移動枠	Zoom guide ring for V_1 lens	Ⓖ-7251
	X 07256	V_2移動枠	Zoom guide ring for V_2 lens	Ⓖ-7251
	X 07257	ズーム連動ピン A	Connection pin A for zoom	Ⓖ—07251, 07252
	07269	ズームストッパー	Zoom stopper	
	07270	カム押えリング	Set ring for cam	Ⓖ-07252
	07271	ズームストッパーセットビス	Set screw for zoom stopper	[S640]-07269
	16425	1.7φ×2.5 剣先ネジ	1.7φ×2.5 Round head screw	[S640]-07270
A-46	16265	1.4φ×1.6 剣先ネジ	1.4φ×1.6 Round head screw	[S640]-07101
A-47	101	羽根ケース部組	Blade case sub-assy	
	X 07101	羽根ケース	Blade case	
	X102	駆動リング部組	Turning ring sub-assy	
	X 07102	駆動リング	Turning ring	
	X 07104	駆動ピン	Turning pin	
	X 07105	リング押え板	Set plate for turning ring	
	X106	ベルクランク部組	Bell crank sub-assy	
	X 07106	ベルクランク	Bell crank	Ⓖ-07101
	X 07107	ベルクランクピン	Bell crank pin	Ⓖ-07108
	X 07109	ベルクランク回転軸	Rotation shaft for bell crank	Ⓖ-07106
	X 07110	駆動リングバネ	Turning ring spring	
	109	絞り羽根部組	Diaphragm blade sub-assy	
	X 07111	絞り羽根	Diaphragm blade	
	X 07112	羽根ダボ	Diaphragm blade dowell	
	X 07113	小座金	Washer	
	X 07114	羽根押え板	Blade cover	
	X 07116	バネ用柱	Spring stud screw	
	61295	1.4φ×2.2 平小ネジ	1.4φ×2.2 Flat screw	
A-48	07108	ベルクランクローラー	Bell crank roller	Ⓖ-07107
A-49	15305	1.4φ×2.5 薄平小ネジ	1.4φ×2.5 Thin flat screw	[S640]-07151
A-50	151	作動リング部組	Working ring for blade sub-assy	
	X 07152	ボール受け	Steel ball ring	
	X 07153	絞り作動リング	Working ring for blade	
	X 07156	ボール押え	Set ring for steel ball	[S640]-07152

UC ZOOM HEXANON AR
80-200 mm F4 (Automatic)

MODEL No. 3596

1	2	3	4	5
Fig. No.	Parts No. or Sub-assembly	部品・部組名称	Parts name or Sub-assembly name	Note
	X 07158	溝カム	Grooved cam	Ⓖ-07108
	07159	絞り作動バネ	Main spring	Ⓖ-07153
	07160	バネ掛ビス A	Spring stud screw A	[S640]-07152
	07161	バネ掛ビス B	Spring stud screw B	[S640]-07153
	07162	絞りストッパー A	Diaphragm stopper A	[S640]-07152
	07163	絞りストッパー B	Diaphragm stopper B	[S640]-07153
	07164	絞り制限リング	Diaphragm stopper ring	
	07166	溝カム止ビス	Set screw for grooued cam	[S640]-07158
A-51	63415	1.7φ×2.2 皿小ネジ	1.7φ×2.2 Counter sunk screw	[S640]-07210
A-52	203	接続板部組	Connection plate sub-assy	
	X 07210	絞り接続レバー	Connection plate for diaphragm	[S640]-07153
	X 07211	本体接続レバーセットビス	Set screw for connection plate	[S640]-07231
	X 07212	マニュアル制限板	Limitation plate	[S640]-07231
	X 07231	本体接続レバー	Connection plate	[S640]-07210
	61295	1.4φ×2.2 平小ネジ	1.4φ×2.2 Flat screw	[S640]-07231
A-53	07151	中　胴	Inside tube	

UC ZOOM HEXANON AR 80-200 mm F4 (Automatic)

A

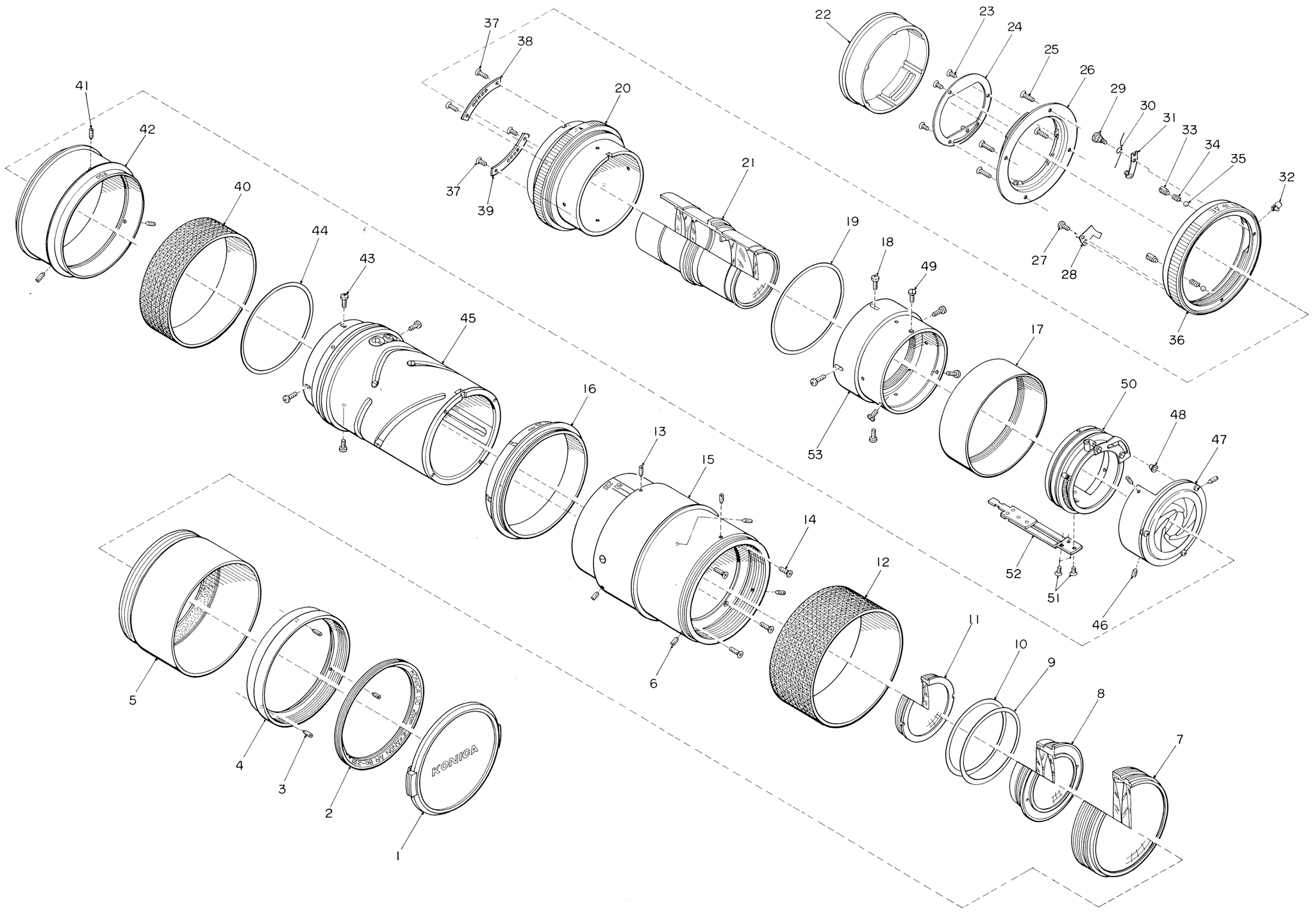

UC ZOOM HEXANON AR
80-200 mm F4 (Automatic)

MODEL No. 3596

1	2	3	4	5
Fig. No.	Parts No. or Sub-assembly	部品・部組名称	Parts name or Sub-assembly name	Note
	101	羽根ケース部組	Blade case sub-assy	
B-1	61295	1.4φ×2.2 平小ネジ	1.4φ×2.2 Flat screw	
B-2	X 07114	羽根押え板	Blade cover	
B-3	109	絞り羽根部組	Diaphragm blade sub-assy	
	X07111	絞り羽根	Diaphragm blade	
	X07112	羽根ダボ	Diaphragm blade dowell	
B-4	X 07113	小座金	Washer	
B-5	X 07110	駆動リングバネ	Turning ring spring	
B-6	X 07109	ベルクランク回転軸	Rotation shaft for bell crank	
B-7	X 106	ベルクランク部組	Bell crank sub-assy	
	X07106	ベルクランク	Bell crank	
	X07107	ベルクランクピン	Bell crank pin	
B-8	X 07116	バネ用柱	Spring stud screw	
B-9	61295	1.4φ×2.2 平小ネジ	1.4φ×2.2 Flat screw	
B-10	X 07105	リング押え板	Set plate for turning ring	
B-11	X 102	駆動リング部組	Turning ring sub-assy	
	X07102	駆動リング	Turning ring	
	X07104	駆動ピン	Turning pin	
B-12	X 07101	羽根ケース	Blade case	
	251	ズーム部組	Zoom sub-assy	
B-1	X 07257	ズーム連動ピン A	Connection pin A for zoom	Ⓖ-07251, 07252
B-2	X 07255	V_1 移動枠	Zoom guide ring for V_1 lens	Ⓖ-07251
B-3	X 07257	ズーム連動ピン A	Connection pin A for zoom	Ⓖ-07251, 07252
B-4	X 07256	V_2 移動枠	Zoom guide ring for V_2 lens	Ⓖ-07251
B-5	07271	ズームストッパーセットビス	Set screw for zoom stopper	[S640]-07269
B-6	07269	ズームストッパー	Zoom stopper	
B-7	16425	1.7φ×2.5 剣先ネジ	1.7φ×2.5 Round head screw	[S640]-07270
B-8	07270	カム押えリング	Set ring for cam	Ⓖ-07252
B-9	X 07252	ズーム回転胴	Turning ring for zoom	Ⓖ-07251, 07270
B-10	X 07251	主　胴	Main tube	Ⓖ-07252, 07255, 07256
B-11	X 07253	反射防止板	Plate for absorbed reflection	

UC ZOOM HEXANON AR
80-200 mm F4 (Automatic)

MODEL No. 3596

1	2	3	4	5
Fig. No.	Parts No. or Sub-assembly	部品・部組名称	Parts name or Sub-assembly name	Note
	151	作動リング部組	Working ring for blade sub-assy	
B-1	07166	溝カム止めビス	Set screw for grooved cam	[S640]-07158
B-2	X 07158	溝カム	Grooved cam	Ⓖ-07108
B-3	07161	バネ掛ビス B	Spring stud screw B	[S640]-07153
B-4	07163	絞りストッパー B	Diaphragm stopper B	[S640]-07153
B-5	07164	絞り制限リング	Diaphragm stopper ring	
B-6	07160	バネ掛ビス A	Spring stud screw A	[S640]-07152
B-7	07159	絞り作動バネ	Main spring	Ⓖ-07153
B-8	07162	絞りストッパー A	Diaphragm stopper A	[S640]-07152
B-9	X 07156	ボール押え	Set ring for steel ball	[S640]-07152
B-10	51169	1.6φ 鋼球	1.6φ steel ball	
B-11	X 07152	ボール受け	Steel ball ring	
B-12	X 07153	絞り作動リング	Working ring for blade	[S640]-07210

UC ZOOM HEXANON AR 80-200 mm F4 (Automatic) B

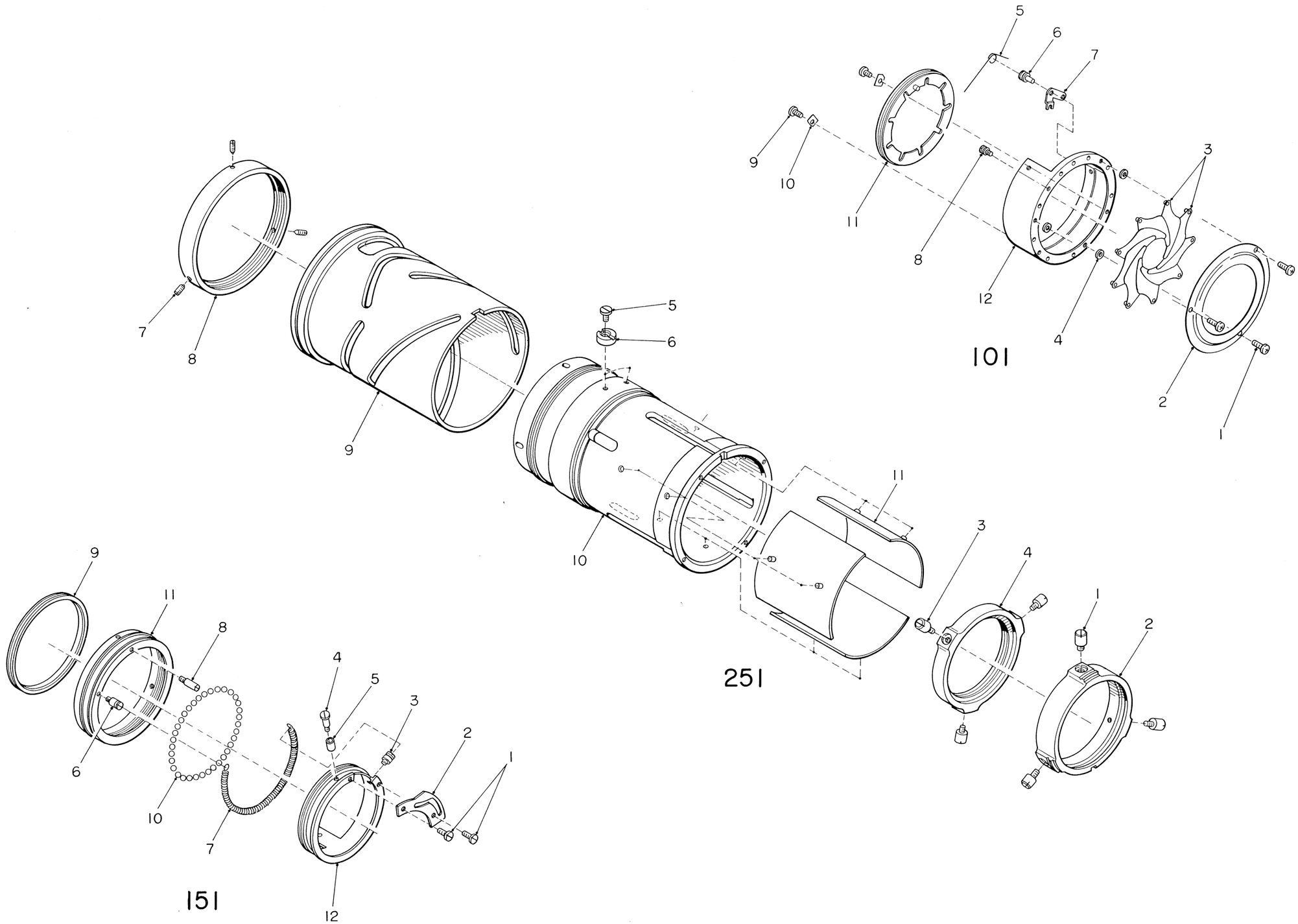

Seq.	Parts, Sub-Ass'y to be disassembled (Fig. No.)	Description	Solvent	Exclusive Tools
1	Engraved ring (A-2)	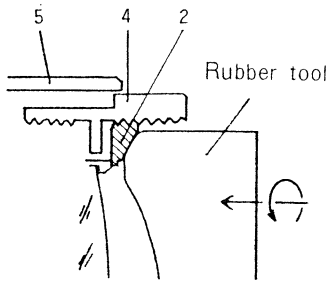 Remove the engraved ring (A-2) by strongly pushing the rubber revolver which is screwed in the filter screw of the front tube (A-4).		
2	Round head screw (A-3) Front tube (A-4) Hood sub-assy. (A-5)	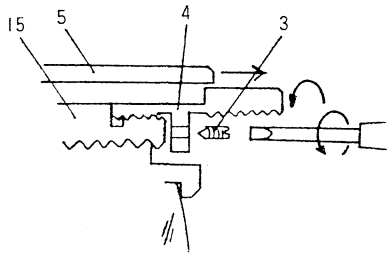 After removing the round head screw (A-3), the front tube (A-4) should be, as this tube is screwed in the focus ring (A-15). Remove the hood sub-assy. (A-5) by pulling it toward you.	T ↓ 3-(S640)-4	
3	Round head screw (A-6) FC lens sub-assy. (A-7) V_1 lens sub-assy. (A-8) V_2 lens sub-assy. (A-11) V_1 adjusting washer (A-9, A-10)	There are two methods of securing the FC lens - the old method and the new method. The old method applies to the products after 6B; the new method applies to the products after 6E. Old Type 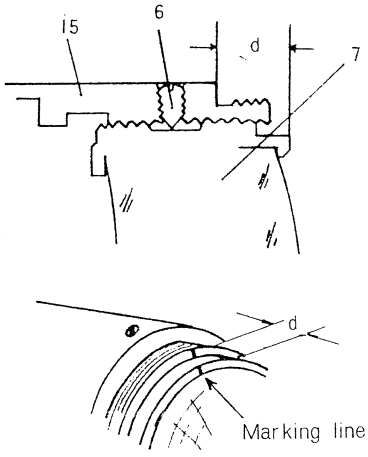 The FC lens sub-assy. (A-7) is screwed into the focus ring (A-15). To dismount this lens sub-assy., remove three round head screws (A-6) in advance.	T ↓ 6-(S640)-15	

Seq.	Parts, Sub-Ass'y to be disassembled (Fig. No.)		Description	Solvent	Exclusive Tools
			In the old method, FC lens sub-assy. (A-7) is removed by securing it in position by round head screws (A-6) at the position where it is optically FC adjusted, because there is no protrusion on the FC lens sub-assy. and helicoid sub-assy. (A-15). For this reason, it is important to determine the position relations between (A-7) and (A-15). By so doing, re-assembly of the lens can be conveniently and accurately be made.		
		New Type	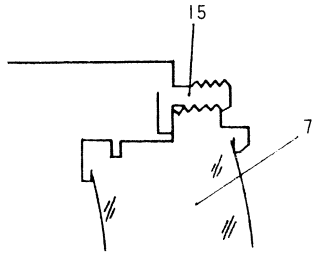 (A-7) is only screwed into the (A-15). Since the screws have protrusion, it is not necessary to determine their position relations or to mark a marking line. V_1 lens sub-assy. (A-8) and V_2 lens sub-assy. (A-11) are screwed into the V_1 moving frame and V_2 moving frame of the zoom lens sub-assy. (A-45), respectively. In many cases, the V_1 lens sub-assy. (A-8) has washers inserted in. These washers should be kept in a designated place so that their are not lost.		
4	Focus leather (A-12) Round head screw (A-13) Distance scale ring (A-16)		The leather (A-12) is merely fitted in position. 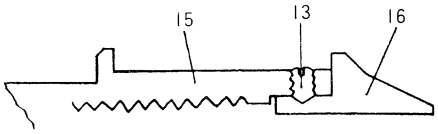	T ↓ 15-(S640)-13	

Seq.	Parts, Sub-Ass'y to be disassembled (Fig. No.)	Description	Solvent	Exclusive Tools
5	Counter sunk screw (A-14) Helicoid sub-assy. (A-15) Flat screw (A-55) Stopper ring (A-54)	The helicoid sub-assy. (A-15) is screwed into the zoom lens sub-assy (A-45) by flat screws (A-14). To dismount it, remove (A-14) and then remove the focus ring by pulling it toward you. 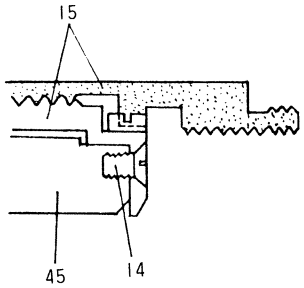 At that time, mark a marking line for necessary to determine position relations of (A-15) and (A-45). Do not attempt to disassemble (A-15). But mark a marking line so that position relations can be known when disassembling it is absolutely necessary. 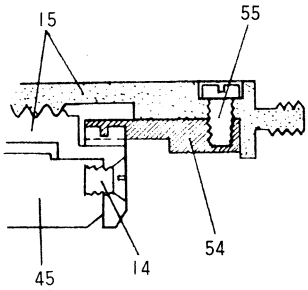 In the case of the new type, avoid loosening the flat screw and stopper ring.		
6	Inside tube cover (A-17) Flat screw (A-18) ff regulating washer (A-19) Master lens sub-assy. (A-21)	The inside tube cover (A-17) is screwed in to the outside tube (A-20). As Sundyne is applied to it, first drop toluole to the connected area of the (A-17) and (A-20) in sufficient quantity and then remove the inside tube cover (A-17) with a rubber bend. 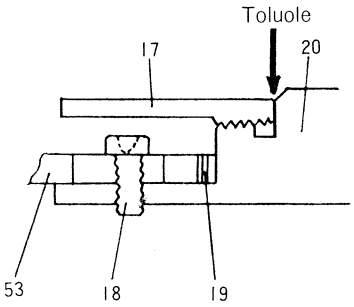 Use care not to loose the washer (A-19) or bend it or allow dirt and dust adhere to it.	T ↓ 17-(S640)-20	

Seq.	Parts, Sub-Ass'y to be disassembled (Fig. No.)	Description	Solvent	Exclusive Tools
7	Counter sunk screw (A-23) Covered plate sub-assy. (A-24) Counter sunk screw (A-25) Mount sub-assy. (A-26) Flat screw (A-27) Manual stopper (A-28) Set screw for AE lock lever (A-29) AE lock spring (A-30) AE lock lever sub-assy. (A-31) AE lock button sub-assy. (A-32) Cap for click spring (A-33) Click spring (A-34) 1.6 ø steel ball (A-35) Diaphragm ring (A-36) Counter sunk screw (A-37) Click plate A (A-38) Click plate B (A-39) Outside tube (A-20)	1. The covered plate sub-assy. (A-24) is bonded to the lens mount sub-assy. (A-24) by Sundine #640 in some cases. If this is the case, remove it by hooking your finger to (A-24) and pulling it. 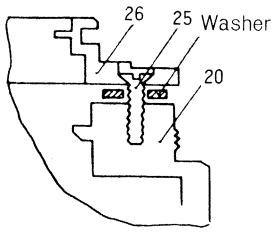 2. If a washer is inserted in between the outside tube (A-20) and the lens mount (A-26), take a record of as to just where each washer is inserted. Note: Washers are used to correct the tilt of optical shaft. 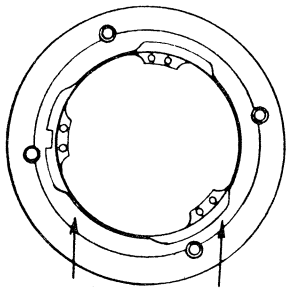 3. When it is difficult to remove (A-26) due to firm application of adhesive, the suggested procedure is to apply force in the direction of an arrow shown in the figure at left and then lift it out. 4. The covered plate sub-assy. can easily be removed by pushing it at the tip-end of the screwdriver, if this is done after removing the diaphragm ring (A-36), instead of removing the click spring (A-34) and steel ball (A-35), and even without removing the cap for click spring (A-33). (Proceed with disassembly with the mount side faced down.)	[T] ↓ 24-{S640}-26 [T] ↓ 20-{S640}-25 [T] ↓ 27-{S640}-28 [T] ↓ 33-{S640}-36	

Seq.	Parts, Sub-Ass'y to be disassembled (Fig. No.)	Description	Solvent	Exclusive Tools
8	Zoom leather (A-40) Round head screw (A-41) Zoom ring (A-42)	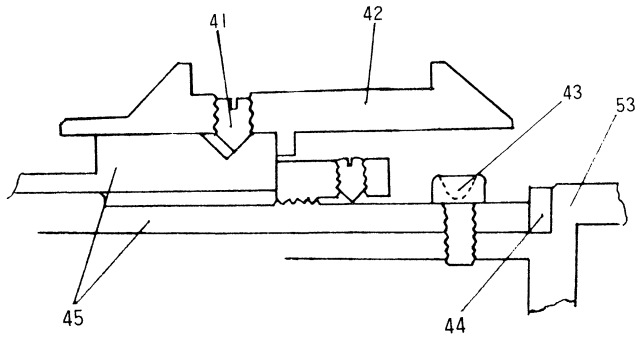 The zoom leather (A-40) is merely screwed in the zoom ring (A-42). But some produced at the initiate stage of regular production are bonded by Sundine.		
9	Flat screw (A-43) ƒƒ regulating washer (A-44) Zoom sub-assy. (A-45)	For illustration, refer to the figure shown under step 8 above. 1. Never attempt to disassemble zoom sub-assy. (A-45). 2. Use care to avoid loosing ƒƒ regulating washer (A-44). Also ensure that it is not bent and that no dirt and dust adhere to it. 3. Make a marking line, which can be used to determine the position relations between the (A-45) and the inside tube (A-53).	[T] ↓ 43-(S640)-45	
10	Flat thin screw (A-49) Inside tube (A-53)	Mark a marking line to enable you to determine position relations between the inside tube (A-53) and the Working ring for blade sub-assy. (A-50).	[T] ↓ 49-(S640)-53	
11	Round head screw (A-46) Blade case sub-assy. (A-47) Bell crank roller (A-48)	Mark a marking line so that the position relations between the blade case sub-assy. (A-47) and the working ring for blade sub-assy. (A-50) can be determined easily.	[T] ↓ 46-(S640)-47	

DISASSEMBLING PROCEDURES

Seq.	Parts, Sub-Ass'y to be disassembled (Fig. No.)	Description	Solvent	Exclusive Tools
12	Working ring for blade sub-assy. (A-50) Counter sunk screw (A-51) Connection plate sub-assy. (A-52)			

ASSEMBLING PROCEDURES

Seq.	Parts, Sub-Ass'y to be assembled (Fig. No.)	Description	Adhesive Lubricant	Exclusive Tools
1	Working ring for blade sub-assy. (A-50) Connection plate sub-assy. (A-52) Counter sunk screw (A-51) Blade case sub-assy. (A-47) Round head screw (A-46) Bell crank roller (A-48)	1. Assemble the blade case sub-assy.(A-47) into the connection plate sub-assy. (A-50) at the position where a marking line is marked at the time of dis-assembly. 2. Do not overly tighten the round head screw; otherwise, deformation of the blade case sub-assy. (A-47) may result.	51-〔S640〕-52 47-〔S640〕-50 46-〔S640〕-47 47-Ⓜ-48	
2	Inside tube (A-53) Flat thin screw (A-49)	1. Assemble the connection plate sub-assy. (A-50) into the inside tube (A-53) at the position where a marking line is marked at the time of disassembly. 2. After assembling, check the function of the blade.	49-〔S640〕-53	
3	Outside tube (A-20) Click plate A (A-38) Click plate B (A-39) Counter sunk screw (A-37) Diaphragm ring (A-36) 1.6 ø steel ball (A-35) Click spring (A-34) Cap for click spring (A-33) AE lock button sub-assy. (A-32) AE lock lever sub-assy.(A-31)	1. After mounting the click spring (A-34) in position, the diaphragm ting (A-36) should be operated to check how click is made properly. 2. Check if the AE lock is firmly and properly made. a) If lock is not properly made, or it is imperfect, it is suggested to grind the portion (shaded portion) of the manual stopper (A-28) shown in the figure below. 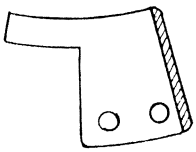 b) After locking, pad out the above portion if there is an excessive play.	37/38-Ⓜ-35 20-Ⓜ-36 33-〔S640〕-36	

Seq.	Parts, Sub-Ass'y to be assembled (Fig. No.)	Description	Adhesive Lubricant	Exclusive Tools
	AE lock spring (A-30) Set screw for AE lock lever (A-29) Manual stopper (A-28) Flat screw (A-27)		27-〔S640〕-28	
4	Mount sub-assy. (A-26) Counter sunk screw (A-25)	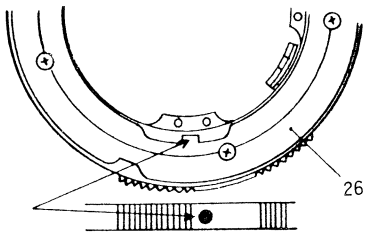 Assemble the mount sub-assy. (A-26) so that its notch groove is properly aligned with the red mark of the outside tube (A-20).	20-〔S640〕-25	
5	ƒƒ regulating washer (A-44) Zoom sub-assy. (A-45) Flat screw (A-43) Zoom ring (A-42) Round head screw (A-41)	1. When inserting the washers (A-44), use the one previously removed. Never attempt to add other washer or remove some already inserted. 2. Assemble the zoom sub-assy. (A-45) with the inside tube (A-53) as marked at the time of disassembly 3. Temporarily tighten down the zoom ring (A-42).	43-〔S640〕-45	

Seq.	Parts, Sub-Ass'y to be assembled (Fig. No.)	Description	Adhesive Lubricant	Exclusive Tools
6	Master lens sub-assy. (A-21) Inside tube cover (A-17) ƒƒ regulating washer (A-19) Outside tube (A-20) Flat screw (A-18)	1. Fully assemble the master lens sub-assy (A-21), making sure that it does not get loose. 2. Before mating the inside tube with the outside tube (A-20), have the inside tube cover (A-17) dropped into the inside tube (A-53). 3. Never attempt to adjust the ƒƒ regulating washer (A-19), as it has originally been set properly before shipment from factory. Also, when combining the (A-20) with (A-53), using a flat screw (A-18), tighten down while keeping them in tight contact with each other. 4. Screw (A-17) into the (A-20).	18-[S640]-53	
7	Distance scale ring (A-16) Helicoid sub-assy. (A-15) Counter sunk screw (A-14) Round head screw (A-13)	1. Assemble the helicoid sub-assy. (A-15) with the zoom sub-assy. (A-45) as marked at the time of disassembly. 2. Secure the distance scale ring (A-16) with the helicoid fully inserted at the position were the ∞ mark of the distance scale ring (A-16) matched to the while datum line of the helicoid sub-assy. (A-15). 3. Tighten down (A-41) at the position where the "80" or "200" mark and the white datum line of (A-15) match to each other. 4. When the helicoid sub-assy. is disassembled, be certain to mate it at the scribed position the moment it is removed. The datum line of the helicoid is shown below. 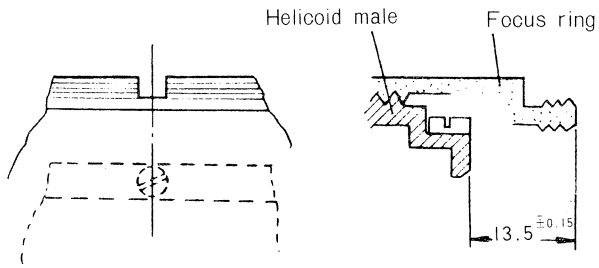	14-[S640]-45 13-[S640]-15 41-[S640]-42	

Seq.	Parts, Sub-Ass'y to be assembled (Fig. No.)	Description	Adhesive Lubricant	Exclusive Tools
8	V_2 lens sub-assy. (A-11) V_1 regulating washer (A-9, A-10) V_1 lens sub-assy. (A-8) FC lens sub-assy. (A-7) Round head screw (A-6)	1. Use the V_1 regulating washers (A-9, A-10) which have been previously removed. Do not add or remove a washer. 2. When assembling the FC lens sub-assy (A-7), proceed as follows: ・In the case of the new type, insert the FC lens sub-assy (A-7) until it comes into contact with the screw and tighten it down so that it will not come loose. ・In the case of the old type, screw it in until the end face of the mirror frame protrudes from the end face of the focus ring to the extent of 2mm. Then temporarily tighten it. 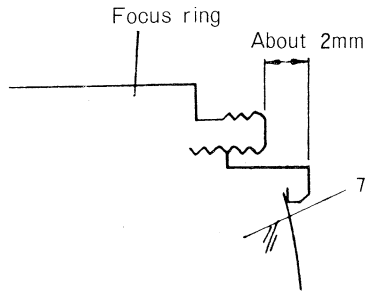		
9	FC adjustment	Old Type 1. Mount the lens on the camera and set focal distance to f = 80. 2. In this condition, rotate the FC lens sub-assy. (A-7) while viewing a distant point through a finder and then set the FC lens at the optimum focus position. 3. Zoom the lens to f = 200 now and repeat the step 2 above. 4. Again, zoom the lens to f = 80 and repeat the entire succeeding procedure. Locate the position where the view is made equal at f = 80 and f = 200 by repeating this procedure and then tighten down the round head screw (A-6) by hand.	6-[S640]-15	

Seq.	Parts, Sub-Ass'y to be assembled (Fig. No.)	Description	Adhesive Lubricant	Exclusive Tools
		New Type I. When you did not loosen the stopper ring, proceed as follows: Insert the FC lens sub-assy. (A-7) until it comes into contact with the screw of the focus ring and tighten it firmly so that the (A-7) does not come loose. In this case, no particular FC adjustment is necessary. II. When you have loosened the stopper ring, proceed as follows: 1. Mount the lens on the camera and set focal distance to f = 80. 2. In this condition, rotate the focus ring while looking into the ∞ distance through a finder and set the focus ring firmly at the optimum focus position. 3. Now zoom the lens to f = 200 and repeat the step 2. 4. Again zoom the lens to f = 80 and repeat the steps 1 through 3. 5. When the position of both f = 80 and 200 becomes equal, turn the stopper ring clockwise until it comes into contact with the stopper while making sure that the focus ring is not moved. 6. When the stopper ring comes into contact with the stopper, tighten down three flat screws.		
10	Hood sub-assy. (A-5) Front tube (A-4) Round head screw (A-3)	After fitting the hood sub-assy. (A-5) in position, screw in the front tube (A-4) for necessary assembling purpose. Then set and tighten the round head screw (A-3) firmly to prevent it from coming loose.	3-[S640]-4	
11	Engraved ring (A-2)	Screw the engraved ring into the front tube (A-4).		

ASSEMBLING PROCEDURES

Seq.	Parts, Sub-Ass'y to be assembled (Fig. No.)	Description	Adhesive Lubricant	Exclusive Tools
12	Covered plate sub-assy. (A-24) Counter sunk screw (A-23)		23-[S640]-26	
13	Zoom leather (A-40) Focus leather (A-12)	Gradually and carefully fit the leather in while pulling it. In this case, ensure this leather is applied in position.		