OLYMPUS

OM 707
OM 77 AF
REPAIR MANUAL

OLYMPUS OPTICAL CO., LTD.

EXPLANATION OF MARKS

① Indicates parts that are supplied both as a single piece and as an assembled unit. In the latter case, the single part is incorporated in the assembled unit indicated with the mark ①.
Exception: Parts in the mark ( ) are not supplied in single pieces.
(Parts that are supplied only in single pieces are not indicated with any mark. While parts that are supplied as an assembled unit are prefixed with "Z" or "U".)

] Several types of parts for the same position are available, from which most suitable one is to be selected.

✻ 3 Parts differ according to different models and types. This mark is used to indicate various combinations in a picture.

◠ Left-handed screw. The mate screw hole is not marked particularly.

 Indicates parts that should not be touched directly by bare hand because special surface treatment is applied. Wear fingerstalls or use tweezers.

★ Not supplied as a repair part.

▭ Used exclusively for black finish models.

—— Indicates original parts. New, modified ones are not indicated with this mark. Both original and modified parts are supplied.

═══ No more available parts due to design change or out of stock.

 A correction mark. Parts with this mark are not available.

〈 2 〉 Modified parts that are unable to show in the technical manual. The figure indicates reference page number.

2-A3 This notation is entered in the "Remarks" column of parts list and indicates parts position in the technical manual.

2-A3 → Parts position. The technical manual is divided into 16 equal sections. Each section can be identified by using A, B, C and D from left to right and 1, 2, 3 and 4 from top to bottom.

→ Indicates page number in which the technical manual appears. However, 1/1 (page 1 of 1) is not indicated particularly.

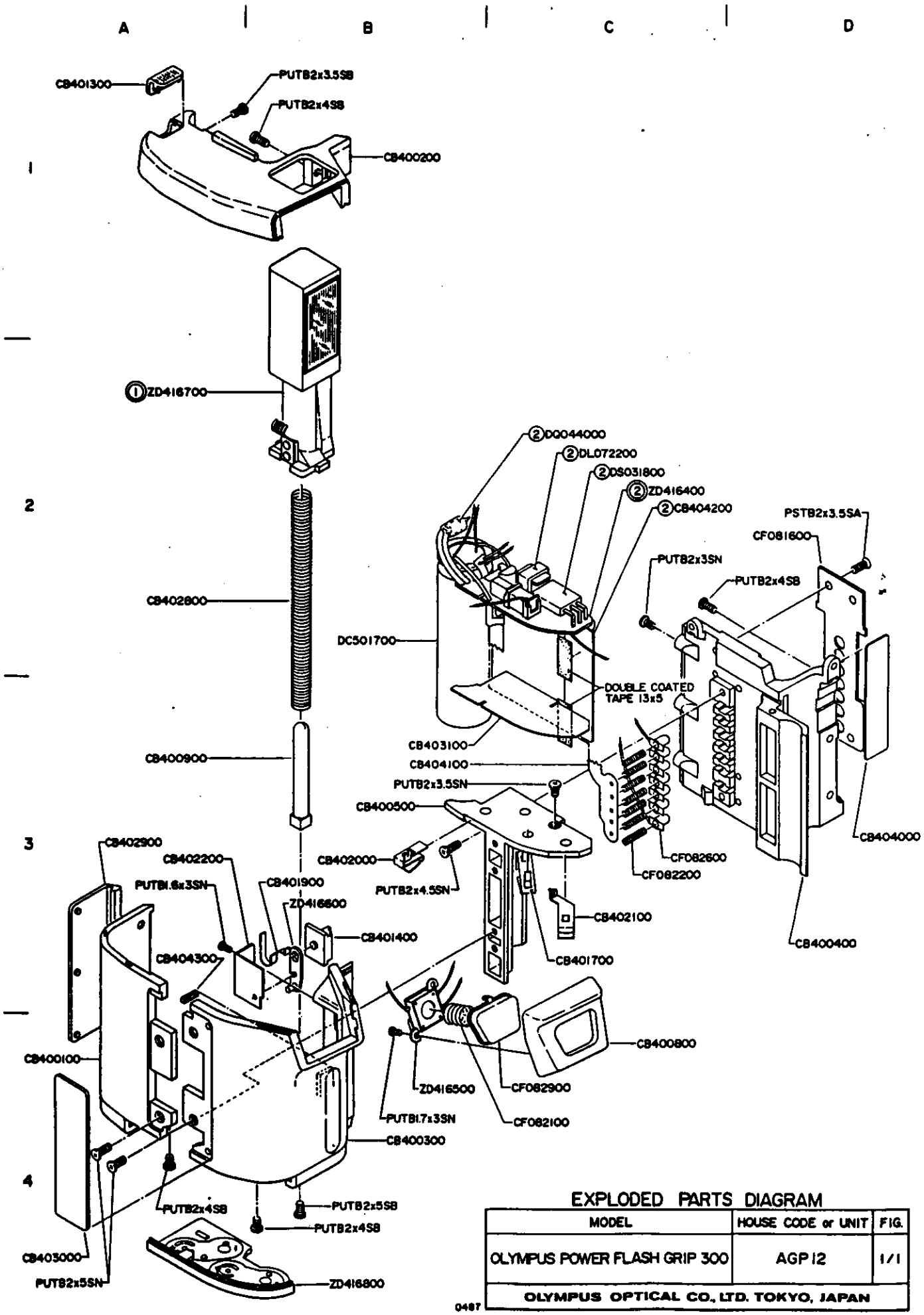

EXPLODED PARTS DIAGRAM

MODEL	HOUSE CODE or UNIT	FIG.
OLYMPUS POWER FLASH GRIP 300	AGP12	1/1
OLYMPUS OPTICAL CO., LTD. TOKYO, JAPAN		

0487

オリンパスパワーフラッシュグリップ３００

NP-3 0587

AGP12

部番	部品名	備考	単価	個数
CB400100	ウシロカバー	1-A4	250	1
CB400200	ウワイタ	1-B1	350	1
CB400300	マエカバー	1-B4	500	1
CB400400	ナカイタ	1-D3	250	1
CB400500	カクヘキ	1-B3	200	1
CB400800	SWケース	1-C4	150	1
CB400900	ハシラ	1-A3	100	1
CB401300	ネオンマド	1-A1	100	1
CB401400	PUボタン	1-B3	100	1
CB401700	セッペンC	1-C3	150	1
CB401900	モドシバネ	1-B3	150	1
CB402000	B セッペンA	1-B3	200	1
CB402100	B セッペンB	1-C3	200	1
CB402200	オサエイタ	1-A3	100	1
CB402800	S バネ	1-A2	50	1
CB402900	G ゴム	1-A3	50	1
CB403000	S ゴム	1-A4	200	1
CB403100	ゼツエン	1-B3	50	1
CB404000	シール	1-D3	50	1
CB404100	G キバン	1-B3	400	1
CB404200	SWキバン	1-C2	350	1
CB404300	ストッパ	1-A3	50	1
CF081600	GSイタ	1-D2	100	1
CF082100	REL バネ	1-C4	50	1
CF082200	GSバネ	1-C3	50	7
CF082600	G セッテン	1-C3	100	7
CF082900	REL ボタン	1-C4	100	1
DC501700	M コンデンサ	C101 1-B2	700	1
DL072200	M トランス	T101 1-C2	400	1
DQ044000	ネオン	DS102 1-C2	250	1
DS031800	トランジスタ	Q201 1-C2	200	1

部番	部品名	備考	単価	個数
ZD416400	ELキバン	1-C2	1600	1
ZD416500	REL-SW	1-B4	400	1
ZD416600	カムイタ	1-B3	200	1
ZD416700	ストロボクミ	1-A2	1000	1
ZD416800	デンチフタ	1-B4	350	1
RJJ0	リード 線 黒	長さ10m	250	
RJJ2	リード 線 赤	長さ10m	250	
RKJ4	リード 線 黄	長さ10m	250	
RKJ6	リード 線 青	長さ10m	250	
RKJ9	リード 線 白	長さ10m	250	
TBJN	チューブ	長さ5m	100	
TNJN	チューブ	長さ5m	100	
PSTB2 ×3.5SA			20	
PUTB1.6 ×3SN			20	
PUTB1.7 ×3SN			20	
PUTB2 ×3.5SB			20	
PUTB2 ×3.5SN			20	
PUTB2 ×4 SB			20	
PUTB2 ×4.5SN			20	
PUTB2 ×5 SB			20	
PUTB2 ×5 SN			20	

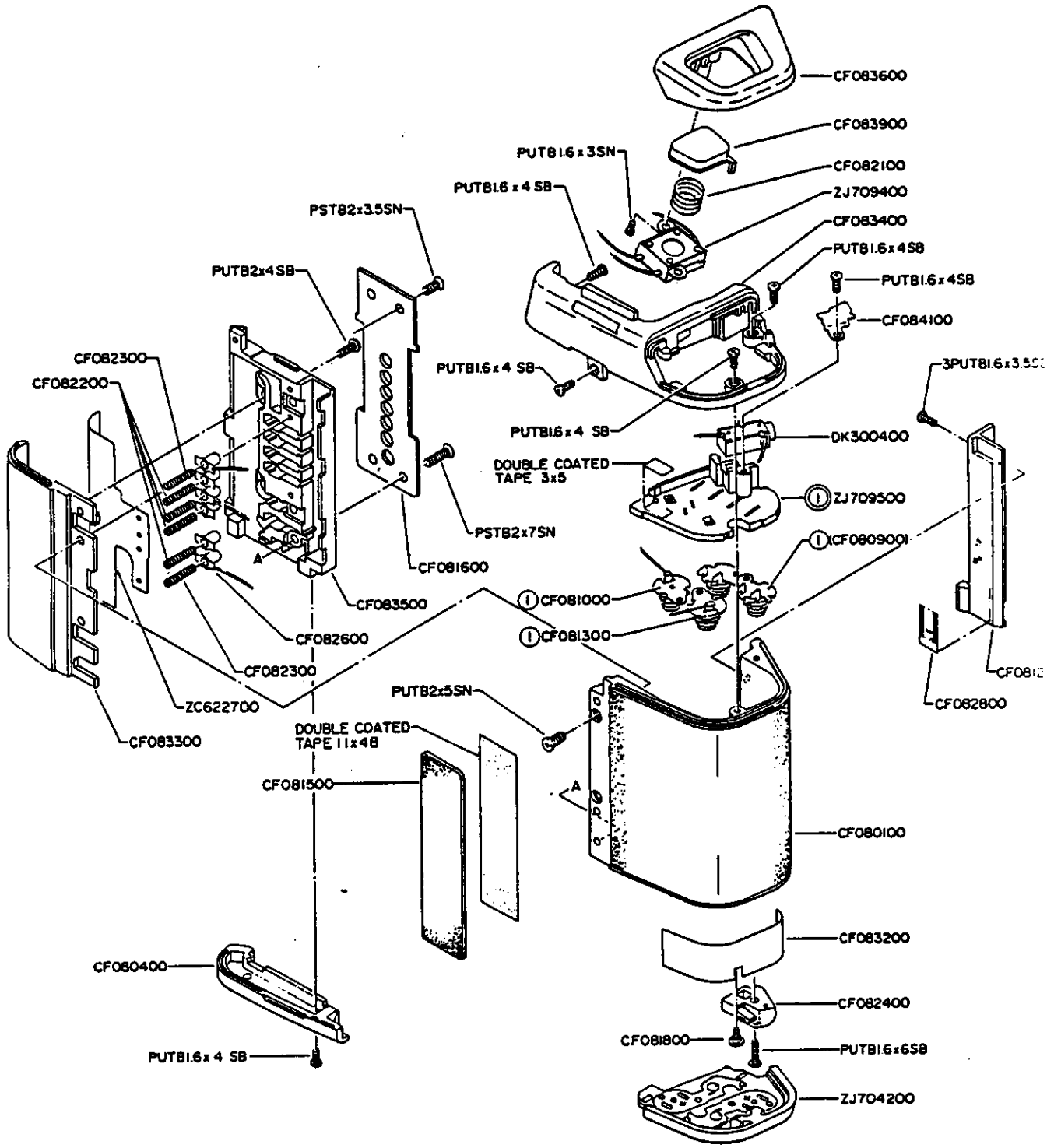

EXPLODED PARTS DIAGRAM

MODEL	HOUSE CODE or UNIT	FIG
OLYMPUS POWER GRIP 100M	AGB4M	1/1
OLYMPUS OPTICAL CO., LTD. TOKYO, JAPAN		

0687

OLYMPUS POWER GRIP 100M

PARTS LIST

AGB4M

PARTS No.	NAME OF PARTS	NOTE	PARTS No.	NAME OF PARTS	NOTE
CF080100	G FRONT COVER	1-D3	PUTB 1.6x 3 SN	SCREW	
CF080400	G BOTTOM PLATE	1-A3	PUTB 1.6x 4 SB	SCREW	
CF081200	BODY HOOKER	1-D3	PUTB 1.6x 6 SB	SCREW	
CF081300	D SPRING	1-C2	PUTB 2 x 4 SB	SCREW	
CF081500	SIDE RUBBER	1-B3	PUTB 2 x 5 SN	SCREW	
CF081600	GS PLATE	1-B2			
CF081800	GUIDE PIN	1-C3			
CF082100	REL SPRING	1-D1	3PUTB 1.6x3.5SN	SCREW	
CF082200	GS SPRING	1-A2			
CF082300	GS SPRING 2	1-A2,B3	PSTB 2x3.5 SN	SCREW	
CF082400	G BOTTOM PLATE 2	1-D3	PSTB 2x 7 SN	SCREW	
CF082600	G CONTACT	1-B2			
CF082800	B SEAL 2	1-D3			
CF083200	B SEAL	1-D3			
CF083300	G REAR COVER M	1-A3			
CF083400	G TOP COVER M	1-D2			
CF083500	CONTACT HOLDER M	1-B2			
CF083600	BOTTOM BASE M	1-D1			
CF083900	REL BUTTOM M	1-D1			
CF084100	SW HOLDER	1-D2			
DK300400	CORD CONNECTOR	1-C2			
ZC622700	ML CIRCUIT BOARD	1-A3			
ZC704200	BATTERY LID	1-D4			
ZC709400	SWITCH	1-D1			
ZC709500	D WALL	1-D2			

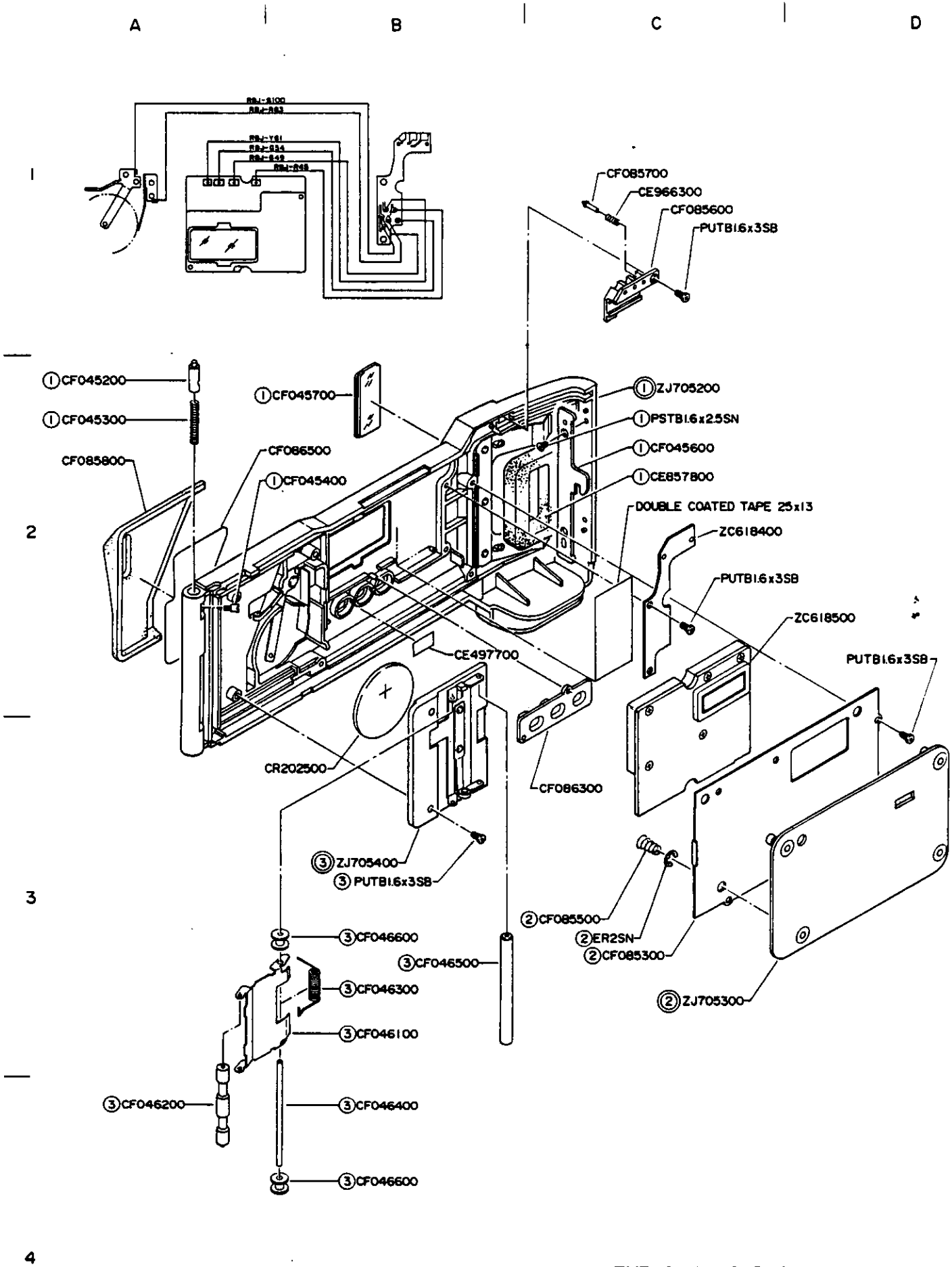

EXPLODED PARTS DIAGRAM

MODEL	HOUSE CODE or UNIT	FIG
RECORDATA BACK 100	ABD-1	1/1
OLYMPUS OPTICAL CO., LTD. TOKYO, JAPAN		

1086

OLYMPUS OM-AF SYSTEM RECORDATA BACK 100

ABD-1

NP-3 0487

PARTS NO.	NAME OF PARTS	NOTE
CE497700	FP TAPE 2	B2
CE857800	P LIGHT PROOF	C2
CE966300	D CONTACT SPRING	C1
CF045200	RC SHAFT	A2
CF045300	RC SHAFT SPRING	A2
CF045400	RC SHAFT SCREW	B2
CF045600	LOCK PLATE A	C2
CF045700	WINDOW	B2
CF046100	F GUIDE A	B3
CF046200	F ROLLER A	A4
CF046300	GUIDE SPRING A	B3
CF046400	GUIDE SHAFT A	B4
CF046500	SK ROLLER 1	B3
CF046600	SK ROLLER 2	B3.B4
CF085300	P.P HOLDER	C3
CF085500	P. SPRING	C3
CF085600	CONTACT BASE	C1
CF085700	D CONTACT	C1
CF085800	D GRIP	A2
CF086300	D BUTTON	C3
CF086500	B TAPE	B2
ZC618400	D CIRCUIT BOARD	C2
ZC618500	CIRCUIT BOARD UNIT	D2
ZJ705200	REAR COVER D	C2
ZJ705300	PRESSURE PLATE	C3
ZJ705400	F GUIDE	B3

PARTS NO.	NAME OF PARTS	NOTE
	SCREW	
PUTB1.6x3SB		
PSTB1.6x2.5SN		
	E RING	
ER-2SN		

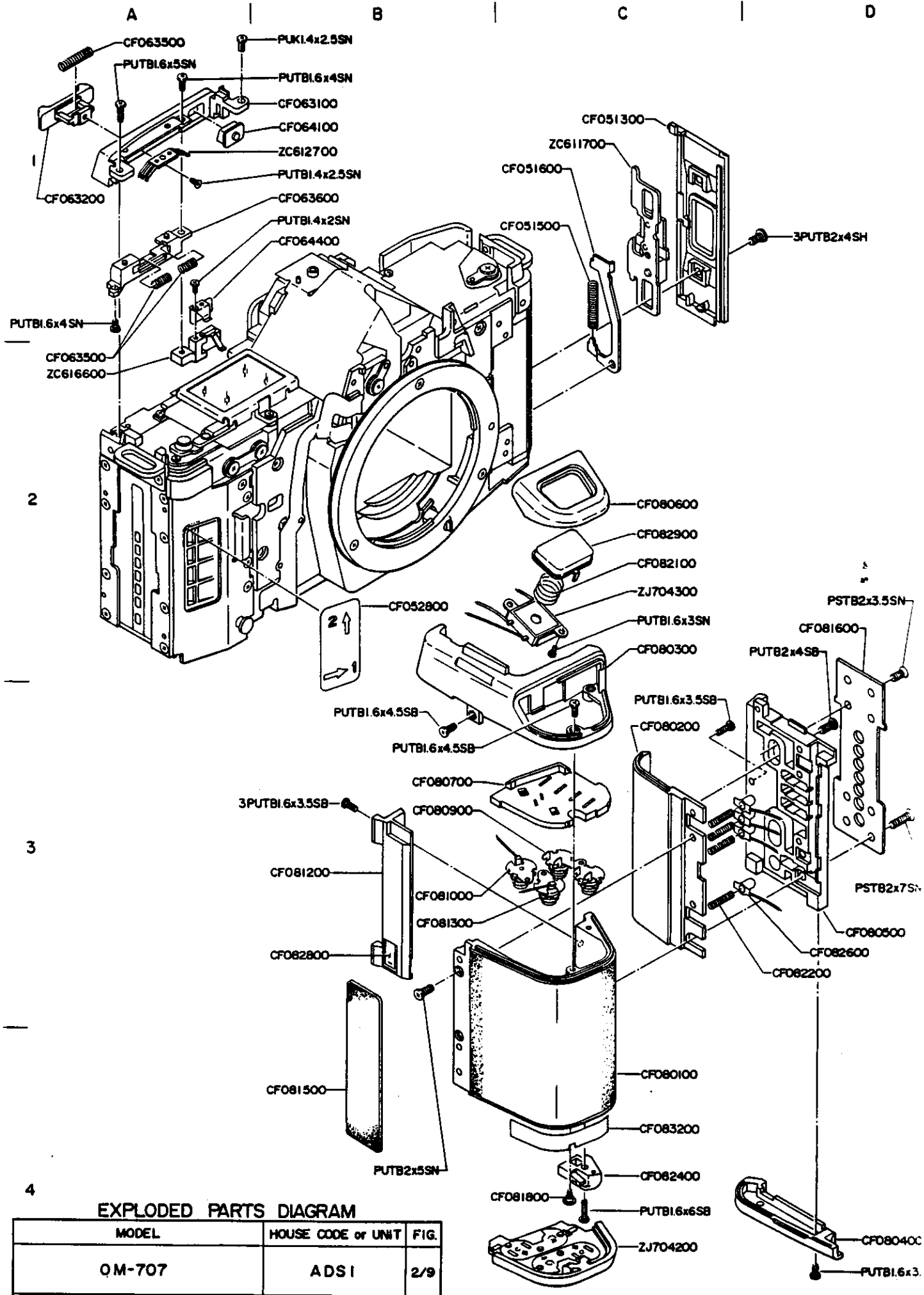

EXPLODED PARTS DIAGRAM

MODEL	HOUSE CODE or UNIT	FIG.
OM-707	ADS I	2/9
OLYMPUS OPTICAL CO., LTD. TOKYO, JAPAN		

0966

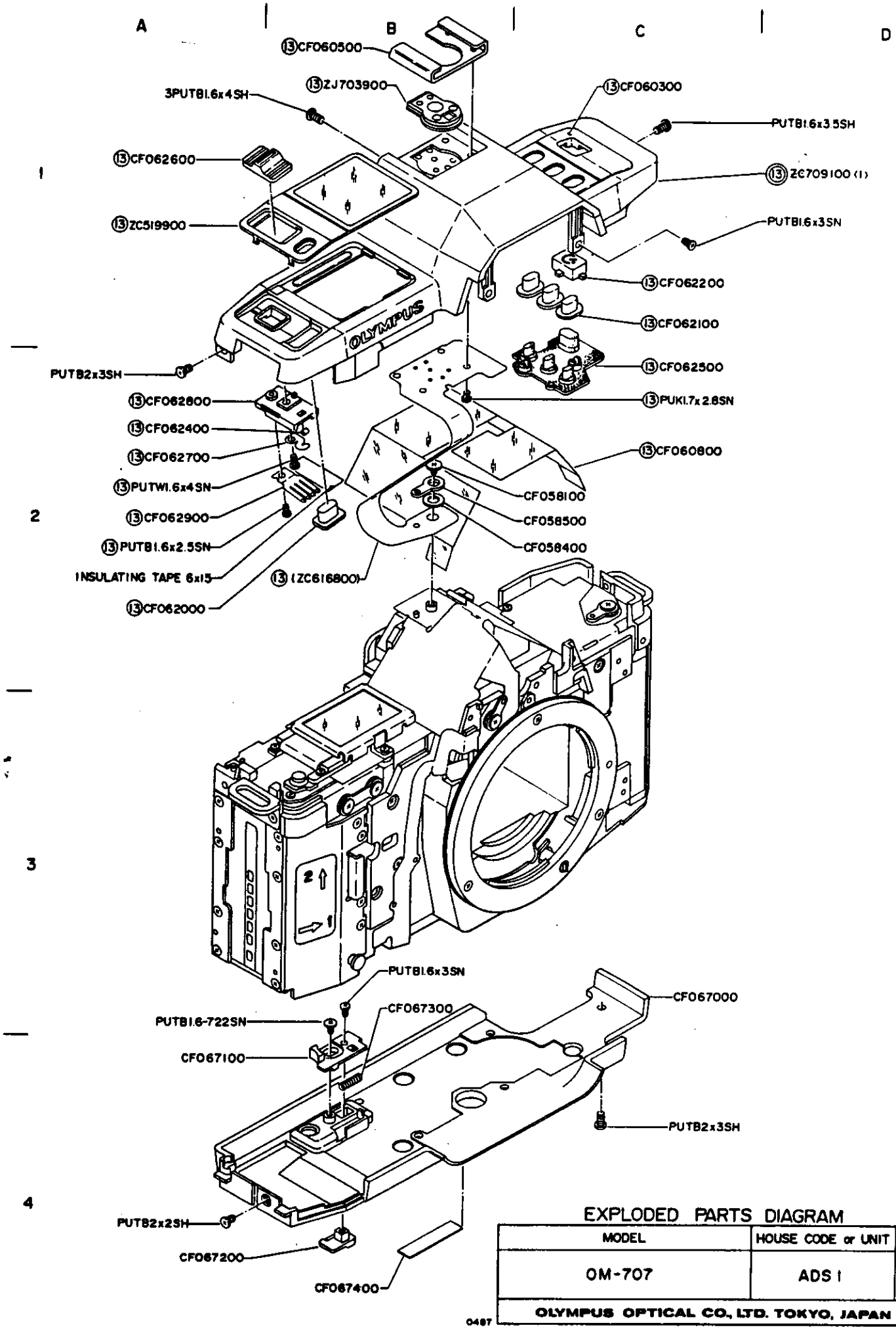

EXPLODED PARTS DIAGRAM

MODEL	HOUSE CODE or UNIT	FIG.
OM-707	ADS 1	1/9
OLYMPUS OPTICAL CO., LTD. TOKYO, JAPAN		

0487

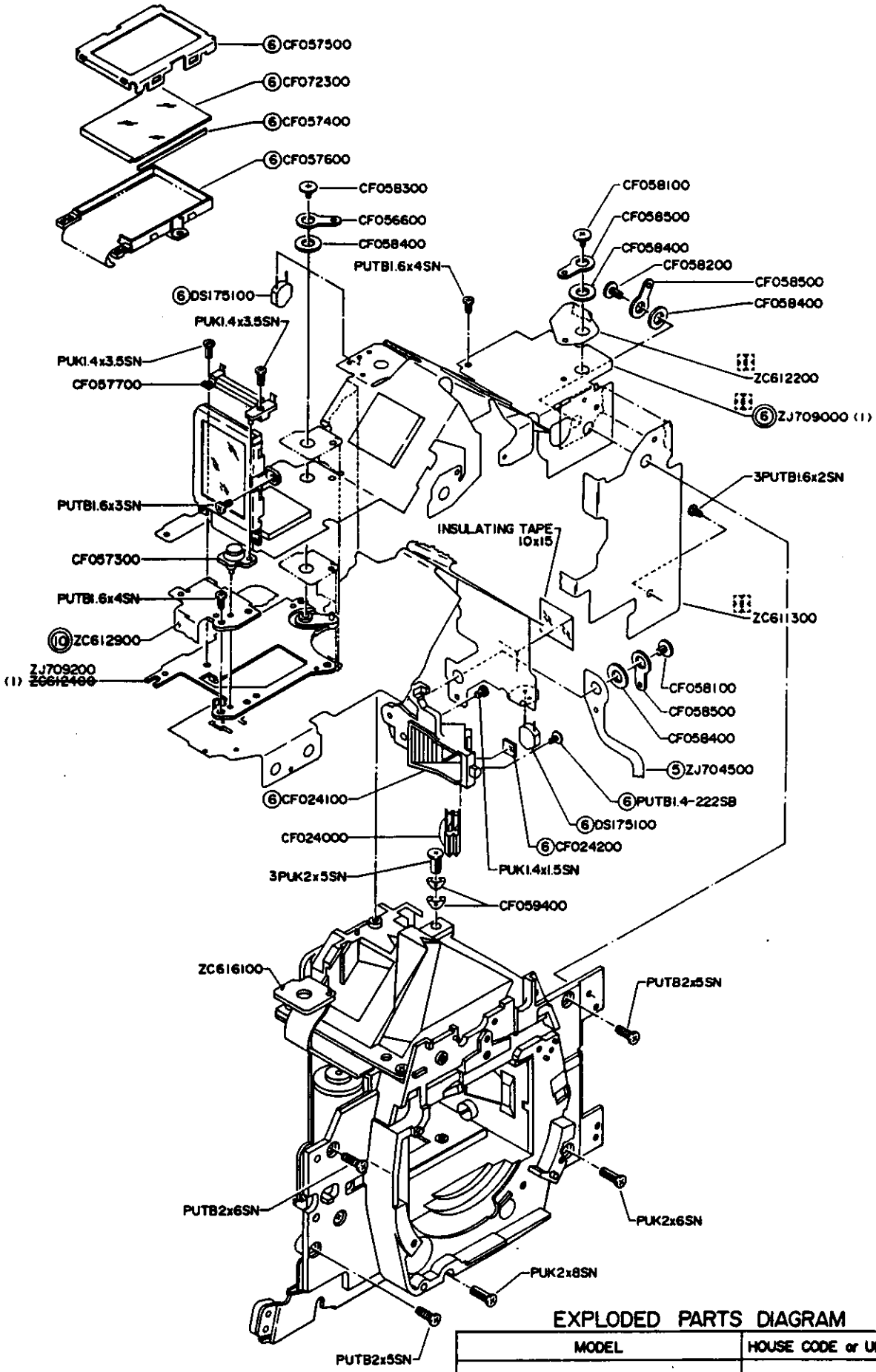

EXPLODED PARTS DIAGRAM

MODEL	HOUSE CODE or UNIT	FIG.
OM-707	ADS I	4/9
OLYMPUS OPTICAL CO., LTD. TOKYO, JAPAN		

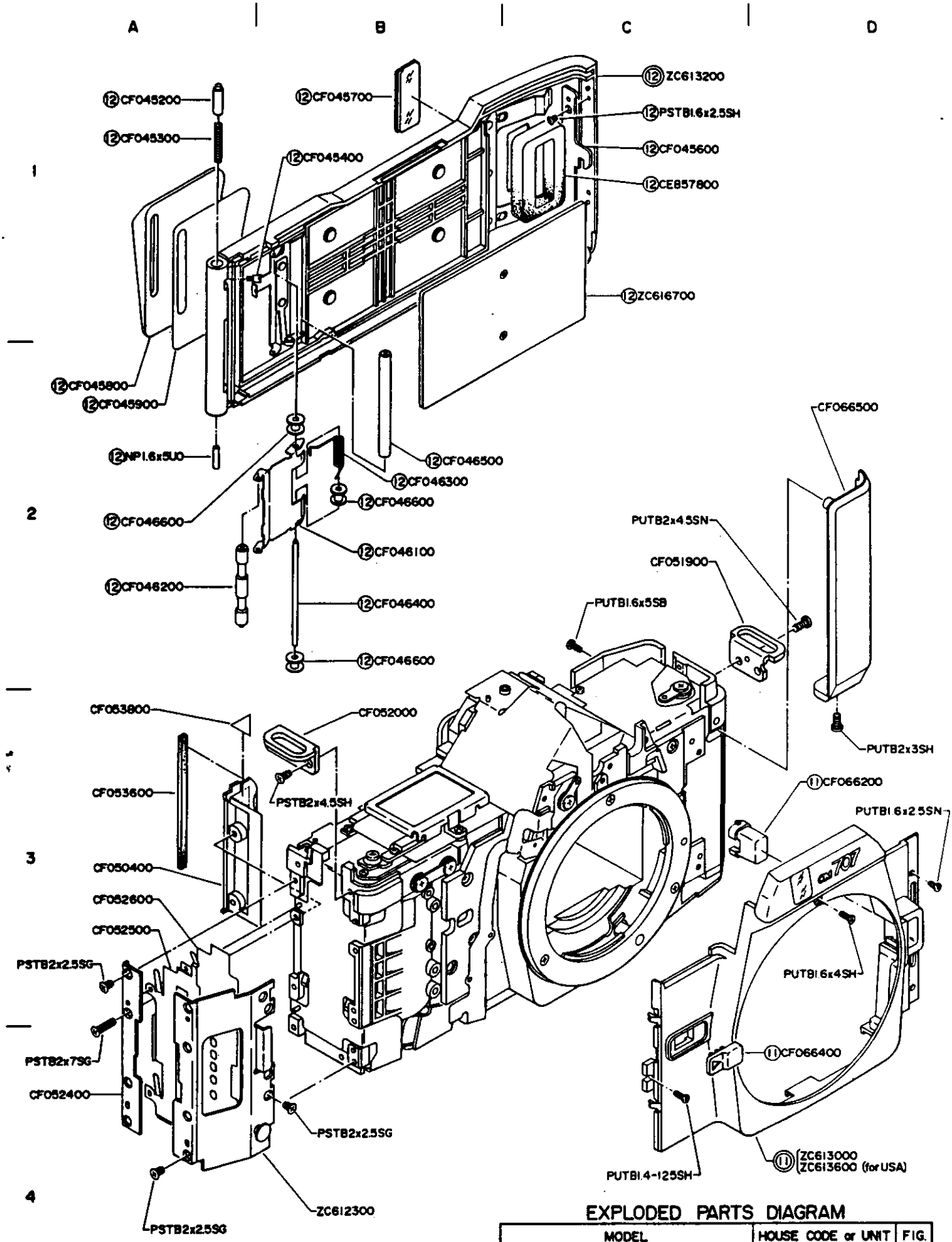

EXPLODED PARTS DIAGRAM

MODEL	HOUSE CODE or UNIT	FIG.
OM-707	ADS 1	3/9
OLYMPUS OPTICAL CO., LTD. TOKYO, JAPAN		

0487

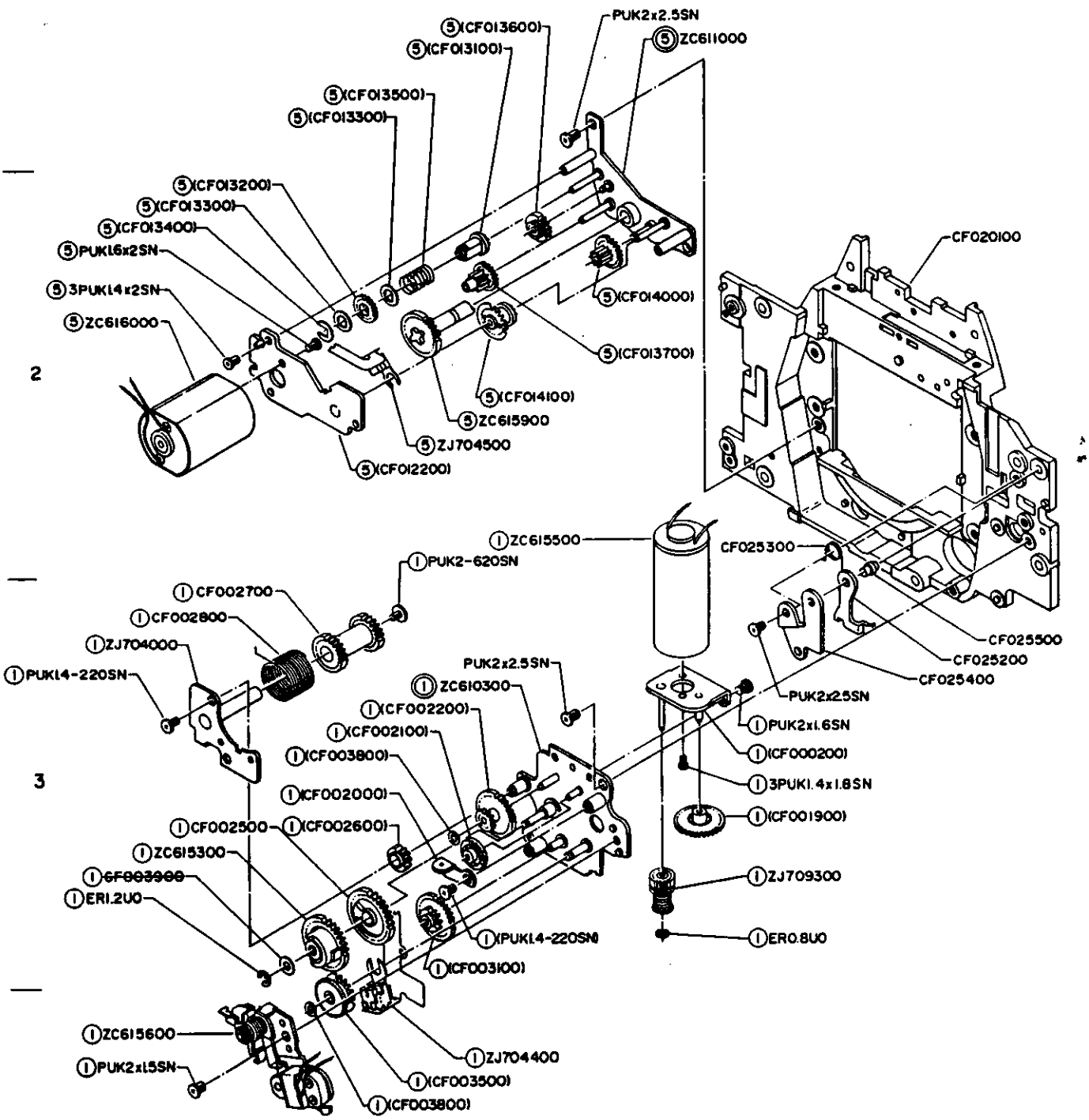

EXPLODED PARTS DIAGRAM

MODEL	HOUSE CODE or UNIT	FIG.
OM-707	ADS I	6/9
OLYMPUS OPTICAL CO., LTD. TOKYO, JAPAN		

0487

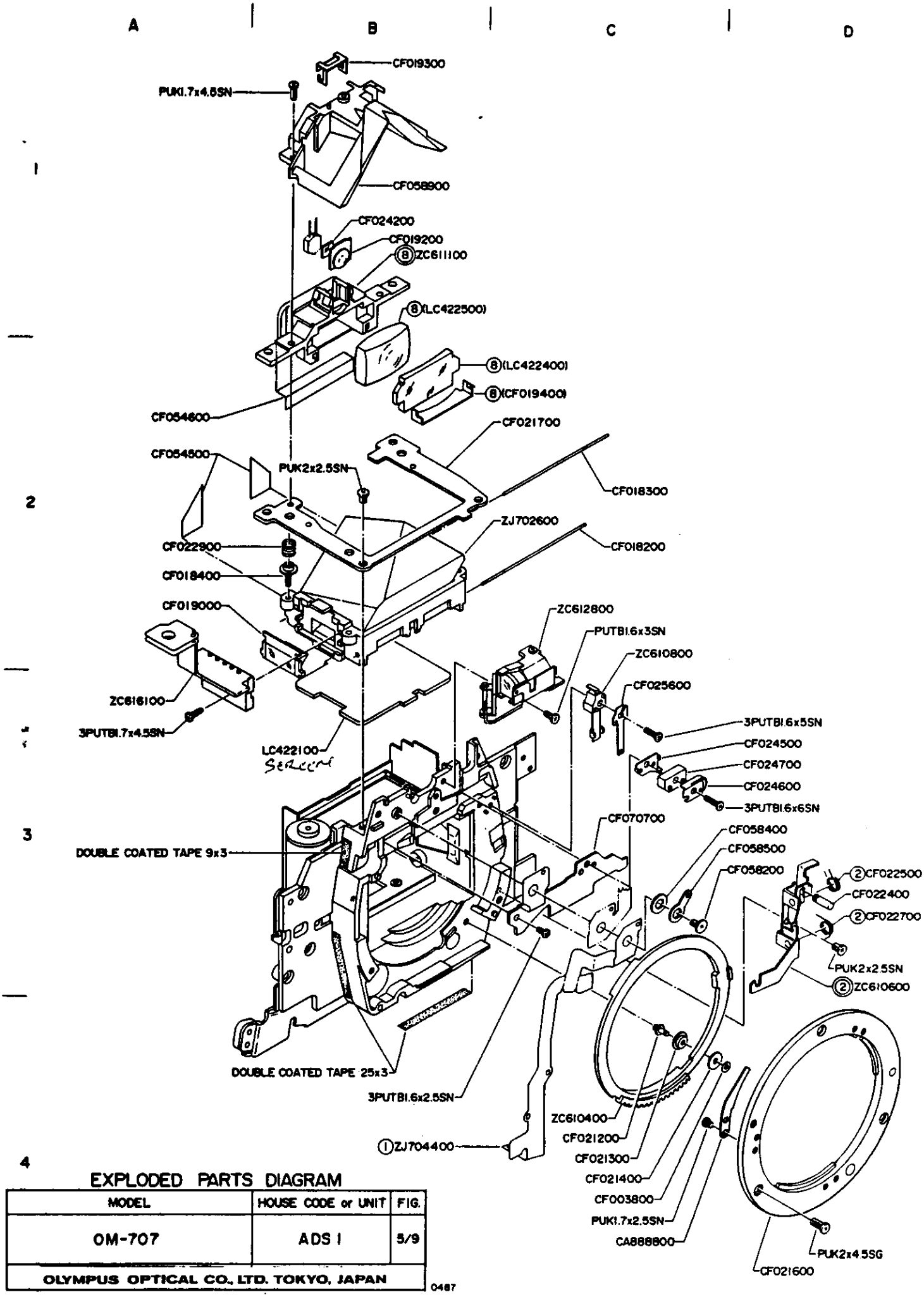

EXPLODED PARTS DIAGRAM

MODEL	HOUSE CODE or UNIT	FIG.
OM-707	ADS 1	5/9
OLYMPUS OPTICAL CO., LTD. TOKYO, JAPAN		

0487

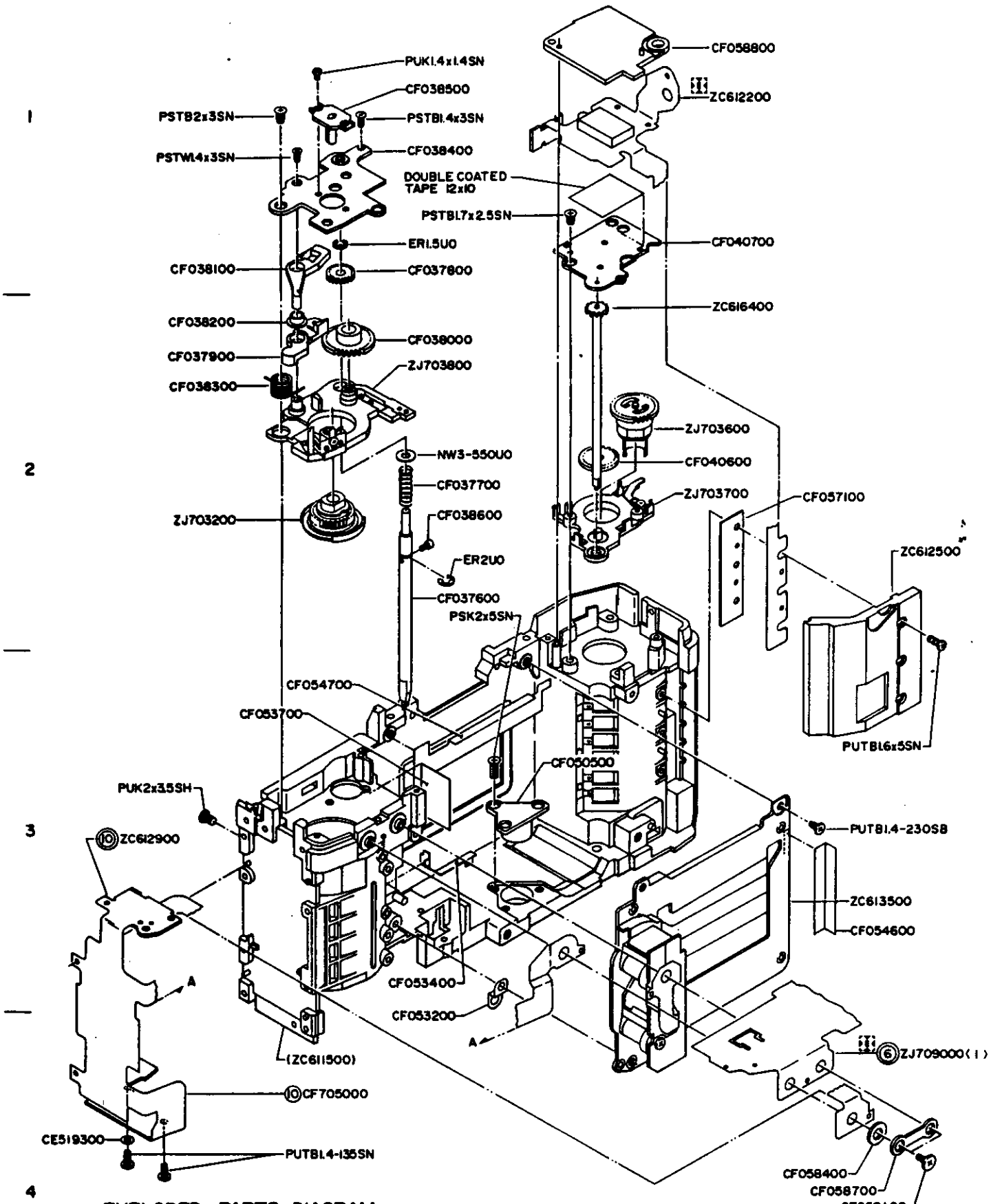

EXPLODED PARTS DIAGRAM

MODEL	HOUSE CODE or UNIT	FIG.
OM-707	ADS I	8/9
OLYMPUS OPTICAL CO., LTD. TOKYO, JAPAN		

0487

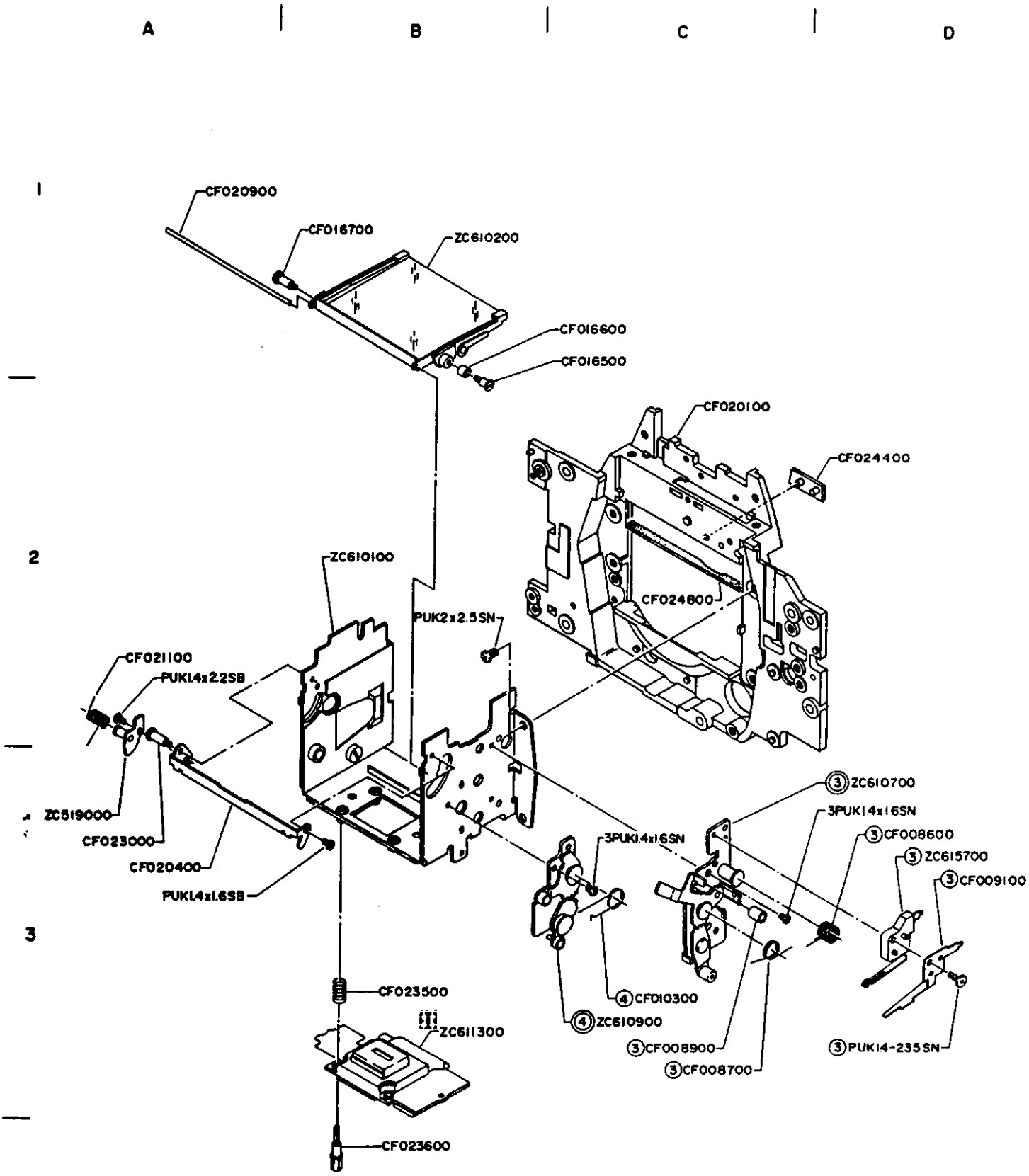

EXPLODED PARTS DIAGRAM

MODEL	HOUSE CODE or UNIT	FIG.
OM-707	ADS I	7/9
OLYMPUS OPTICAL CO., LTD. TOKYO, JAPAN		

0487

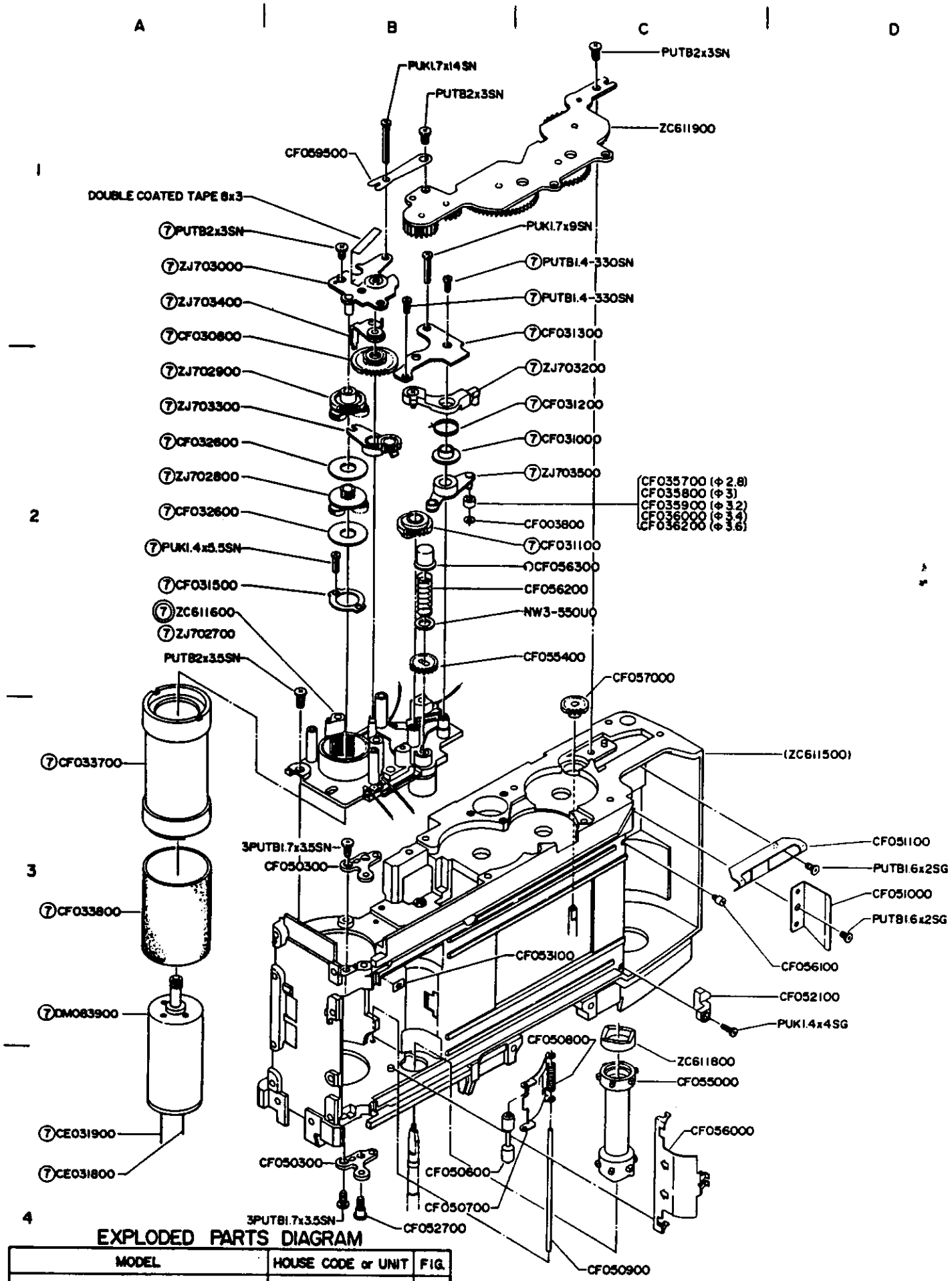

EXPLODED PARTS DIAGRAM

MODEL	HOUSE CODE or UNIT	FIG.
OM-707	ADS1	9/9
OLYMPUS OPTICAL CO., LTD. TOKYO, JAPAN		

0487

0287

PARTS NO.	NAME OF PARTS	NOTE
CA888800	MOUNT SPRING	5-C4
CA937700	GUIDE	9-D3
CE576000	L INSULATOR	8-B4
CE857800	P LIGHT PROOF	3-C1
CF002500	A8 GEAR 2	6-A3
CF002700	A8 GEAR	6-A3
CF002800	DIA SPRING	6-A3
CF003800	GEAR HOLDER A	5-C4
CF003900	6 GEAR WASHER	6-A3
CF008600	MU SPRING	7-D3
CF008700	STOPPER SPRING	7-C3
CF008900	MU TUBE	7-C3
CF009100	CONTACT 1	7-D3
CF010300	SC SPRING	7-C3
CF016500	M UP SHAFT	7-C1
CF016600	M UP COLLAR	7-C1
CF016700	M SPRING HOOK	7-B1
CF018200	F SPRING	5-C2
CF018300	R SPRING	5-C2
CF018400	FOCUS SHAFT	5-A2
CF019000	F PRISM	5-A2
CF019200	P LENS	5-B1
CF019300	SBC HOLDER	5-B1
CF020100	FRONT CASTING	6-D2, 7-C2
CF020400	HOLD PLATE	7-A3
CF020900	M SHAFT	7-A1
CF021100	MD SPRING	7-A2
CF021200	A PULLEY SHAFT	5-C4
CF021300	A PULLEY	5-C4
CF021400	A WASHER	5-C4
CF021500	B MOUNT F	5-D4
CF021700	ARM	5-C2
CF022400	L LOCK PIN	5-D3
CF022500	L LOCK SPRING	5-D3
CF022700	C SPRING	5-D3
CF022900	FOCUS SPRING	5-A2
CF023000	HOLD PLATE SCREW	7-A3
CF023500	SENSER SPRING	7-B3
CF023600	SENSER SCREW	7-B4
CF024000	M LENS	4-B3
CF024100	SBC COVER	4-B3
CF024200	FILTER	4-C3, 5-B1
CF024400	PIN GUIDE	7-D2
CF024500	AV SWITCH	5-D3
CF024600	AV CONTACT	5-D3
CF024700	INSULATION BASE	5-D3
CF024800	M DUMPER	7-C2
CF025200	G STOPPER PLATE 1	6-D3
CF025300	G STOPPER SPRING	6-C2
CF025400	G STOPPER PLATE 2	6-D3
CF025500	G STOPPER SHAFT	6-D3
CF025600	LOCK CONTACT 1	5-C3
CF030800	2 GEAR	9-A1
CF031000	W STOPPER COLLAR	9-C2
CF031100	4 CAM GEAR	9-C2
CF031200	W STOPPER SPRING	9-C2
CF031300	W5 BASE PLATE	9-C1
CF031500	W3 WHSHER	9-A2
CF032600	PL WASHER	9-A2
CF033700	SPOOL	9-A3
CF033800	SPOOL RUBBER	9-A3
CF035700	HS ROLLER 21 φ2.8	9-C2
CF035800	" 22 φ3	9-C2
CF035900	" 23 φ3.2	9-C2
CF036000	" 24 φ3.4	9-C2
CF036200	" 25 φ3.6	9-C2
CF037600	S SHAFT	8-B2
CF037700	SK SPRING	8-B2
CF037800	S2 GEAR	8-B1
CF037900	A LEVER	8-A2
CF038000	6 GEAR	8-B2
CF038100	HOLD LEVER	8-A1
CF038200	HOLD LEVER COLLAR	8-A2
CF038300	A LEVER SPRING	8-A2
CF038400	W1 BASE PLATE	8-B1
CF038500	SPOOL SHAFT	8-B1
CF038600	S SHAFT PIN	8-B2
CF040600	R10 GEAR	8-C2
CF040700	R1 BASE PLATE	8-C1
CF045200	RC SHAFT	3-A1
CF045300	RC SHAFT SPRING	3-A1

0287

PARTS NO.	NAME OF PARTS	NOTE
CF067000	BOTTOM PLATE	1-C3
CF067100	R LOCK PLATE	1-A4
CF067200	R LOCK LEVER	1-A4
CF067300	R LOCK SPRING	1-B3
CF067400	NUMBER PLATE	1-B4
CF070500	B CIRCUIT BOARD	8-B4
CF070700	S CIRCUIT BOARD	5-C3
CF072300	BLCD	4-B1
CF080100	G FRONT COVER	2-C4
CF080200	G REAR COVER	2-C3
CF080300	G TOP COVER	2-C2
CF080400	G BOTTOM PLATE	2-D4
CF080500	CONTACT HOLDER	2-D3
CF080600	BUTTON BASE	2-C2
CF080700	D WALL	2-B3
CF080900	D CONTACT 2	2-B3
CF081000	D CONTACT 3	2-B3
CF081200	BODY HOOKER	2-B3
CF081300	D SPRING	2-B3
CF081500	SIDE RUBBER	2-B4
CF081600	GS PLATE	2-D2
CF081800	GUIDE PIN	2-C4
CF082100	REL SPRING	2-C2
CF082200	GS SPRING	2-D3
CF082400	G BOTTOM PLATE 2	2-C4
CF082600	G CONTACT	2-D3
CF082800	B SEAL 2	2-B3
CF082900	REL BUTTON	2-C2
CF083200	B SEAL	2-C4
DS175100	PHOTO DIODE	4-B1, C3
LC422100	FOCUSING SCREEN	5-B3

PARTS NO.	NAME OF PARTS	NOTE
ZC519000	SHAFT PLATE	7-A3
ZC519900	UPPER PLATE	1-A1
ZC610100	M BASE PLATE	7-B2
ZC610200	MIRROR FRAME 2	7-B1
ZC610300	A BASE PLATE	6-B2
ZC610400	D RING	5-C4
ZC610600	LC BASE	5-D3
ZC610700	R BASE PLATE	7-D3
ZC610800	LOCK BASE	5-C2
ZC610900	SC BASE PLATE	7-C3
ZC611000	F BASE PLATE	6-C1
ZC611100	S FRAME	5-B1
ZC611300	F CIRCUIT BOARD	4-D2,7-B3
ZC611400	MAIN CIRCUIT BOARD	4-D2,8-D4
ZC611600	LOWER WINDER ASS'Y	9-A2
ZC611700	KEY PLATE B	2-C1
ZC611800	SW RING	9-C4
ZC611900	R3 BASE PLATE	9-C1
ZC612200	DX CIRCUIT BOARD	4-D2,8-C1
ZC612300	G PLATE 1	3-B4
ZC612400	HEAD PLATE	4-A2
ZC612500	DX ASS'Y	8-D2
ZC612700	SHIFT PLATE	2-B1
ZC612800	LIGHT SUPPLIER	5-C2
ZC612900	B CIRCUIT BOARD	4-A2,5-A3
ZC613000	FRONT COVER	3-D4 FOR ONLY
ZC613200	REAR COVER	3-C1
ZC613300	TOP COVER	1-D1
ZC613500	SHUTTER ASS'Y	8-D3
ZC613600	FRONT COVER	3-D4 FOR ONLY (FOR NORTH AMERICA ONLY
ZC615300	6 GEAR 1	6-A3
ZC615500	AV MOTOR	6-B2
ZC615600	MG BASE PLATE 2	6-A4
ZC615700	MU SWITCH	7-D3
ZC615900	SHAFT GEAR	6-B2
ZC616000	AF MOTOR	6-A2
ZC616100	FD CIRCUIT BOARD	4-B3,5-A3
ZC616300	W MOTOR	9-A3
ZC616400	R9 GEAR	8-C2
ZC616600	AL SWITCH	2-A2
ZC616700	PRESSURE PLATE	3-C1
ZC616800	FL CIRCUIT BOARD	1-B2

0287

PARTS NO.	NAME OF PARTS	NOTE
CF045400	RC SHAFT SCREW	3-B1
CF045600	LOCK PLATE A	3-C1
CF045700	WINDOW	3-B1
CF045800	B GRIP	3-A2
CF045900	B TAPE	3-A2
CF046100	F GUIDE A	3-B2
CF046200	F ROLLER A	3-A2
CF046300	GUIDE SPRING A	3-B2
CF046400	GUIDE SHAFT A	3-B2
CF046500	SK ROLLER 1	3-B2
CF046600	SK ROLLER 2	3-B2
CF050300	HINGE	9-B3, B4
CF050400	HINGE HOLDER	3-A3
CF050500	TRIPOD MOUNT PLATE	8-C3
CF050600	F ROLLER B	9-B4
CF050700	F GUIDE B	9-B4
CF050800	GUIDE SPRING B	9-C3
CF050900	GUIDE SHAFT B	9-C4
CF051000	P SIDE SPRING	9-D3
CF051100	P BOTTOM SPRING	9-D3
CF051300	LOCK PLATE COVER	2-C1
CF051500	LOCK SPRING	2-C1
CF051600	LP LOCK	2-C1
CF051900	STRAP PLATE L	3-C2
CF052000	STRAP PLATE R	3-B3
CF052100	P GUIDE	9-D3
CF052400	G PLATE 2	3-A4
CF052500	G SPRING PLATE	3-A3
CF052600	G CONNECTION COVER	3-A3
CF052700	HINGE SCREW	9-B4
CF052800	G NAME PLATE	2-B2
CF053100	FW PLATE	9-C3
CF053300	LIGHT PROOF 1	8-D3
CF053400	LIGHT PROOF 2	8-B3
CF053500	LIGHT PROOF U1	8-B2
CF053600	LIGHT PROOF V	3-A3
CF053700	LIGHT PROOF G	8-B3
CF053800	LIGHT PROOF H	3-A3
CF053900	LIGHT PROOF U2	8-C3
CF055000	SPROCKET	9-C4
CF055400	SPROCKET GEAR	9-C2
CF055500	CLAW	9-C2

PARTS NO.	NAME OF PARTS	NOTE
CF056000	GUIDE PLATE	9-C4
CF056200	R SPRING	9-C2
CF056300	R BUTTON	9-C2
CF057000	R 91 GEAR	9-C2
CF057100	DX PACKING	8-D2
CF057300	RES RUBBER	4-A2
CF057400	LC RUBBER	4-B1
CF057500	LC FRAME	4-B1
CF057600	LC CASE	4-B1
CF057700	LC HOLDER	4-A2
CF058100	C SCREW 13	1-C2,4-C1,2
CF058200	C SCREW 16	4-C1,5-D3
CF058300	FD SCREW	4-B1
CF058400	C RUBBER 14	1-C2,4-B1,C1
CF058500	CNW 14	1-C2,4-B1,C1
CF058700	CNW 16	8-D4
CF058800	SWITCH BASE	8-C1
CF058900	FPC BASE	5-B1
CF059400	G CONTACT U	4-C3
CF059500	G CONTACT D	9-B1
CF060300	TOP COVER L	1-C1
CF060500	ACCE. SHOE	1-B1
CF060800	U INSULATOR	1-C2
CF062000	RES BUTTON	1-A2
CF062100	BUTTON X	1-C1
CF062200	BUTTON S	1-C1
CF062500	BUTTON RUBBER	1-C2
CF062600	PW KNOB	1-A1
CF062700	PW CLICK	1-A2
CF062800	PW PLATE	1-A2
CF062900	PW CONTACT	1-A2
CF063000	PW BALL	1-A2
CF063100	SHIFT FRAME	2-B1
CF063200	SHIFT KNOB	2-A1
CF063500	SHIFT SPRING	2-A1,A2
CF063600	SPRING CASE	2-B1
CF064100	AL BUTTON	2-B1
CF064400	AL CONTACT 2	2-B1
CF066200	E BUTTON	3-D3
CF066400	G LOCK KNOB	3-D4
CF066500	L GRIP	3-D2

OLYMPUS OM707 (OM77AF)

PARTS LIST

ADS 1 5/5

0287

PARTS NO.	NAME OF PARTS	NOTE
PSTB2 X 2.5SG		SCREW
PSTB2 X 3 SN		"
PSTB2 X 3.5SH		"
PSTB2 X 3.5SN		"
PSTB2 X 7 SG		"
PSTB2 X 7 SN		"
PUTB1.4 X 2 SN		"
PUTB1.4 X 2.5SN		"
PUTB1.4 X 3 SN		"
PUTB1.4 X 3.5SN		"
PUTB1.4 - 135SH		"
PUTB1.4 - 222SB		"
PUTB1.4 - 230SB		"
PUTB1.4 - 330SN		"
PUTB1.6 X 1.5SN		"
PUTB1.6 X 2 SG		"
PUTB1.6 X 2.5SN		"
PUTB1.6 X 3 SN		"
PUTB1.6 X 3.5SB		"
PUTB1.6 X 3.5SH		"
PUTB1.6 X 4 SH		"
PUTB1.6 X 4 SN		"
PUTB1.6 X 4.5SB		"
PUTB1.6 X 5 SB		"
PUTB1.6 X 5 SN		"
PUTB1.6 X 6 SB		"
PUTB1.6 - 722SN		"
PUTB2 X 2 SH		"
PUTB2 X 3 SH		"
PUTB2 X 3 SN		"
PUTB2 X 3.5SH		"
PUTB2 X 3.5SN		"
PUTB2 X 4 SB		"
PUTB2 X 4 SN		"
PUTB2 X 5 SN		"
PUTB2 X 6 SN		"

PARTS NO.	NAME OF PARTS	NOTE
3PUK1.4 X 1.6SN		SCREW
3PUK1.4 X 1.8SN		"
3UK1.4 X 2 SN		"
3PUTB1.4 X 2SN		"
3PUTB1.6 X 2 SN		"
3PUTB1.6 X 2.5SN		"
3PUTB1.6 X 3.5SB		"
3PUTB1.6 X 4 SH		"
3PUTB1.6 X 4 SN		"
3PUTB1.6 X 5 SN		"
3PUTB1.6 X 6 SN		"
3PUTB2 X 4SH		"
ER0.8SN		E RING
ER0.8UO		"
ER1.2UO		"
ER1.5UO		"
ER2UO		"
NW1.6 - 338UO		WASHER
NW3 - 550UO		"
NP1.6 X 5 UO		PIN
RBJ-A	LEAD WIRE	(BLUE) 10cm LONG
RBJ-B	"	(BLACK) "
RBJ-C	"	(BROWN) "
RBJ-D	"	(ORANGE) "
RBJ-G	"	(GREEN) "
RBJ-H	"	(GRAY) "
RBJ-M	"	(PURPLE) "
RBJ-P	"	(PINK) "
RBJ-R	"	(RED) "
RBJ-W	"	(WHITE) "

0287

PARTS NO.	NAME OF PARTS	NOTE
ZJ702600	PENTA PRISM	5-C2
ZJ702700	W3 BASE PLATE	9-A2
ZJ702800	PL 1	9-A2
ZJ702900	PL 2	9-A2
ZJ703000	W2 BASE PLATE	9-A1
ZJ703100	SPOOL HOLDER	8-A2
ZJ703200	W STOPPER	9-C2
ZJ703300	W3 ARM	9-A2
ZJ703400	R3 ARM	9-A1
ZJ703500	HS LEVER	9-C2
ZJ703600	R11 GEAR	8-C2
ZJ703700	R2 BASE PLATE	8-C2
ZJ703800	W2 BASE PLATE	8-B2
ZJ703900	SHOE CONTACT	1-B1
ZJ704000	A BASE PLATE 2	6-A3
ZJ704200	BATTERY LID	2-C4
ZJ704300	SWITCH	2-C2
ZJ704400	AV CIRCUIT BOARD	5-B4,6-B4
ZJ704500	PIF CIRCUIT BOARD	4-C2,6-B2

PARTS NO.	NAME OF PARTS	NOTE
PSK2 X 5SN		SCREW
PUK1.4 X 1.4SN		"
PUK1.4 X 1.5SN		"
PUK1.4 X 1.6SB		"
PUK1.4 X 2 SN		"
PUK1.4 X 2.2SB		"
PUK1.4 X 2.5SN		"
PUK1.4 X 3.5SN		"
PUK1.4 X 4 SG		"
PUK1.4 X 5.5SN		"
PUK1.4 - 220SN		"
PUK1.4 - 235SN		"
PUK1.6 X 2 SN		"
PUK1.7 X 2.5SN		"
PUK1.7 X 2.8SN		"
PUK1.7 X 4.5SN		"
PUK1.7 X 9 SN		"
PUK1.7 X 14 SN		"
PUK2 X 1.5SN		"
PUK2 X 1.6SN		"
PUK2 X 2 SN		"
PUK2 X 2.5SN		"
PUK2 X 3.5SH		"
PUK2 X 4 SN		"
PUK2 X 4.5SG		"
PUK2 X 6 SN		"
PUK2 X 8 SN		"
PUK2 - 620SN		"
PSTB1.4 X 3SN		"
PSTB1.6 X 2.5SB		"
PSTB1.7 X 2.5SN		"

INDEX

A

PRODUCT OUTLINE

A. PRODUCT OUTLINE

CONTENT

1. PRODUCT OUTLINE

Model name : OLYMPUS OM707 (OLYMPUS OM77AF is for North America)
House code : ADS1

2. MAIN SPECIFICATIONS

Type : 35 mm single lens reflex with autofocus and auto-exposure

Lens mount : OLYMPUS OM-AF mount
Conventional OM lenses are adaptable (AF lens can not be used with conventional OM bodies)

Lens :
1. OM-AF lens (AF possible)
2. OM lens (AF and focus aid are not available)
   - Switches automatically aperture-preferred auto mode
   - Viewfinder indication disappears
   - Early stage products do not self-operate (however, mark is shown in LCD panel)

Shutter : Electronically controlled vertical-travel focal-plane shutter
Shutter speed 2 ~ 1/2000 sec.

Synchronization :
1. Contact (exclusive flash)
2. Hot shoe, X contact, contacts for F flash and for T-series flash

Autofocus :
(Method) TTL phase detection system with CCD zero-in sensor
(Focusing Sensitivity range) EV4 ~ 18 (ISO 100)
(Actuation method)
- Single/continuous
- Press shutter release lightly for focus lock in single mode
- Release is possible only when object is in focus.

(Notice) Single-point 2-color LED in viewfinder
Focused: green lamp
Autofocus impossible: red lamp

AF illuminator : Automatic actuation in low light

Manual focus : OM-AF lens: using shift knob
OM lens: using focus

Photographing mode setting :
1. Single/continuous exchange button
2. Power-focus/Auto-focus exchange button
3. Shift knob
4. X mode (F4) setting button (for normal auto flash)
5. AE-lock button
6. Reset button (press to enter standard mode)
7. Power switch

Light metering method :
(Indication and exposure control) Viewfinder metering
(Exposure control) TTL direct metering
(Sensor element) SBC
(Light measurement range) EV 1 ~ 20 ISO 100 (50 mm F 1.8)

Exposure mode :
1. Program
2. Program shift
3. Automatic program line shift according to focal length of lens exchanged Tele/Standard/Wide 3-stage exchange

Type	Focal length	Turning point
WIDE	below 34 mm	1/15
STANDARD	over 35 mm below 90 mm	1/60
TELE	over 90 mm	1 1/250

Program auto-exposure	:	(Type): Electronic shutter with automatic shutter speed and aperture control (Range): 2 ~ 1/2000 sec. F 1.8 ~ F 22 (50 mm F 1.8) EV 1 ~ 20
Flash control	:	(Super FP flash F280) TTL direct metering/Super FP flash automatic exchange (Grip flash) Flashmatic (T-series flash) TTL direct metering (Normal auto-flash) Normal automatic
Film sensitivity	:	(Rang) ISO 25 ~ 3200 in 1/3 EV steps (Setting) Set to 100 for film with no DX code or when film is not loaded.
Viewfinder	:	(Finder view-field) 93% of actual picture field (Magnification) 0.8X with standard 50 mm lens at infinity (Viewability) -0.5 diopters.
Focusing screeen	:	Fixed Super Lumi-Micron Matte with autofocus frame
Viewfinder information	:	(Type) LCD display, back illumination by LED (Contents) 1. Focus display (Single-point red or green display) 2. Shutter speed display 3. Aperture display 4. Over/Under exposure waring high brightness: "2000" blinks low brightness: "L_0" blinks 5. Flash display Super FP flash and normal flash-recharged mark/adequate flash output mark 6. P shift actuation monitor Dispaly persists for approx. 30 sec. after each operation listed below. 1) Pressing the shutter release halfway 2) Releasing 3) Switching power ON 4) Lens exchange 5) Operation of each button
LCD panel information	:	(Contents) 1. Exposure mode (PROGRAM) "PROGRAM" ON for P exposure mode "PROGRAM" blinks for P shift OFF for OM lens 2. Frame number 3. ISO sensitivity (reads when reset) 4. Film advancing 5. Film end (indication of rewinding) 6. Rewinding 7. Rewind complete (incidation that back cover is open) 8. AF drive mode (single/continuous) 9. Focusing mode (AF/PF) OFF for OM lens 10. Battery check 11. Self-timer 12. X mode (F4)
Film loading	:	Auto-loading (automatically wound to first frame after closing back cover) If film is loaded when power is OFF, actuation starts when power is switched ON.
Film wind	:	Automatic wind: Single/Continuous switchable Max. wind speed: approx. 1.5 frame per sec. Automatically stops at film end Displayed on LCD panel during winding.
Battery life	:	With power Flash Grip 300: 8 rolls or more (using flash for 50% of exposures) With Power Grip 100: 25 ro 25 rolls or more (using 4 sum-4 alkaline batteries, room temperature, 24 EX film, under experimental conditions prescribed by OLYMPUS OPTICAL CO., LTD.)

Exposure counter	:	Progressive type, displayed on LCD panel
Film rewind	:	Automatic rewind with lock knob and R. button. Automatic stop at film end (film leader is rolled up) Displayed on LCD panel during rewinding
Self-timer	:	12 sec. delay electronic self-timer Started by pressing the shutter release button LED indicates self-timer activation
Back cover	:	Exchangeable type with film confirmation window
Accessory shoe	:	Fixed type with direct X contact and 5-pin connector for flash signal
Grip	:	Power battery grip or power flash grip are available
Power source	:	4 sum-4 alkaline batteries (with power flash grip 300 or power grip 100)
Battery source	:	3-step display Displayed when reset Automatically dispalyed during operation Displayed when power is switched on.

1. Battery OK	2. Battery weak	3. Battery empty
		
ON	Blinks	ON

Data hold	:	Nonvolatile static memory for necessary functions
Dimensions	:	146 (W) x 89 (H) x 52 (D) mm (with power grip 100, but excluding projections) 160 (W) x 89 (H) x 67.5 (D) mm (with power flash grip 300, but excluding projections)
Weight	:	595 g (with power grip 100, without battery) 630 g (with power flash grip 300, without battery)

3. NOTES

1. Notes on Using the OM System

No.	Cautions	Reasons
1	Only aperture-preferred use is possible when OM lens is mounted.	AF or focus-aid is not indicated in F. (not linked with body).
2	MT6065 or MT1011 cannot be used	Unadaptable to linking mechanism between body and aperture
3	MR5080 cannot be mounted	Penta-prism of upper plate hinders the operation of the mount-remove button
4	M8FE	
5	Auto-bellows, slide-copier, full film stage, trans-illuminator or double-cable release cannot be used	Penta-prism of upper plate hinders the operation of the mount-remove button No connection hole
6	It is difficult to mount Auto-extension tube 65 ~ 116. Tripod cannot be used	Penta-prism of upper plate hinders the operation of the mount-remove button Front plate hinders the tripod
7	Ring flash is not adaptable to AF zoom lens	Front frame rotates in AF mode
8	T45 is not available	Connection is impossible
9	Polarizing filters or R filters are not available (including circular polarization)	AF error caused by polarization and by reduction of light intensity

2. Notes on Using the System

No.	Cautions	Reasons
1	New lens cannot be mounted on conventional OM bodies.	Contacts obstruct mounting
2	Charging of grip flash is frequently stopped because of excessive drop of battery capacity at low temperature.	Charging is stopped because of the priority of camera operations
3	Lenses other than OLYMPUS products cannot be used	• Lenses may be obstructed by lens-lock-pin during mounting or removing. • Aperture-control may fail to be linked. • Structures in mounting mechanism may be hindered (Problems such as internal damage may occur or the lens may seize)

3. Notes on Driving the Auto-focus Lens

No.	Cautions	Reasons
1	Focusing may be impossible when subject is moving fast or camera is moved while taking a picture.	Contrast of subject is substantially lowered.
2	If viewfinder information is not displayed, AF cannot be activated even by pressing the release button halfway. (If the button is pressed, AF is activated and the shutter is released) Confirm AF indication before AF lock.	
3	Some subjects are difficult to get in focus	Subjects with no contrast or with a particular pattern such as a vertically-striped lattice.
4	When contrast is low and focusing is impossible, the AF indicator in the viewfinder will be red following the focusing action. When focusing is impossible because of other reasons, the AF indicator shows a red lamp.	Focusing action (lens moves forwards to the front line and moves back)
5	Effect of illumination is reduced if the subject is blue or black.	Efficient range is reduced because the amount of reflectivity (red light) for blue or black subjects is small.
6	If subject is too bright (such as a light source), focusing is impossible.	
7	In the continuous AF mode, the grip flash cannot be recharged. Flash fires only for the first time.	To prevent a significant reduction in voltage due to recharging of the flash, recharging is interrupted during shutter release.
8	AF does not operate normally during zooming.	
9	If focusing fails even with illumination, focusing stops temporarily and the lens focuses on a point 3 m from the lens and illumination is begun again.	In order to increase the possibility of focusing.
10	Efficient range of illumination differs depending on the type of lens.	Contrast is lowered
11	If AF starts when the focus aberration is great, the lens may stop briefly.	Focusing action is first carried out when contrast is low because of great focus aberration. After reaching the point where aberration is detectable, the lens stops for a while to check the amount of aberration.

4. Notes on Using Auto-loading, Wind and Rewind

No.	Cautions	Reasons
1	Film leader is rolled up into film cartridge when rewind ends.	To prevent damage to the shutter blades caused by film leader.
2	High temperatures (over 40°C) or high humidity (over 90%) lead to rewind failure.	Film may stick to the pressure plate or the film itself. Use in lower humidity environments (below 70%)
3	Auto-loading may fail below −10°C.	Film is hardened.
4	For some types of film, winding does not stops at the film end.	Some brands of film are more easily broken at the film end by the teeth on the sprocket. (e.g. Agfa Pan film < 100 is not as strong as Sakura 100.)
5	Do not use the films which have been loaded into film cartridge by users themselves.	If the film leader is not cut in the correct shape, winding may fail. If too much film is mounted on the spool, it may be impossible to rewind it all in the spool chamber.
6	Auto-loading may fail if the perforations do not fit the teeth of the sprocket correctly.	
7	Release is impossible unless the back cover is opened once after rewind ends. If the power switch is turned off and on, rewind will start again.	

5. Other Notes

No.	Cautions	Reasons
1	If power is turned off while releasing or winding, operation may not begin again even when power is turned on. If power is turned off while raising the mirror, the mirror may stop.	Sequential mechanism. To escape, press release button in P.F mode.
2	When the lens mount-release button is pressed and held, the same operations are possible as if an OM lens were mounted.	Switched on OM lens mode by pressing lens mount-release button.
3	Lens stops for an instance in the low-speed power focus mode.	Designed for fine adjustment in power focus mode.
4	After exposure, the aperture becomes smaller for an instance.	
5	Take care not to let back light enter through the eyepiece.	Photo sensor for viewfinder information is upper-side of eyepiece. Some amount of back incident light can lower the quality of AF aperture control accuracy.
6	No indications are displayed in the viewfinder during releasing or winding.	

B

INSPECTION STANDARDS

B. INSPECTION STANDARDS

CONTENTS

1. APPEARANCE AND FUNCTIONS

Major check points	Items to be checked	Standards and check procedures	
1. Switches and Buttons	Power switch	Force required to slide power switch	220 ± 70 g
	Rear cover	Force required to press lock button	80 ± 10 g
		Force required to turn opening/closing knob	450 ± 50 g
	Release button	Force required to press release button	
		1st stage	120 ± 80 g
		2nd stage	320 ± 140 g
		Stroke of release button 1st stage	0.8 ± 0.4 mm
		2nd stage	1.1 ± 0.5 mm
	Rewind button	Force required to slide rewind button	
		(early stage)	200 ± 50 g
		(final stage)	350 ± 80 g
		Force required to press rewind button	225 ± 50 g
		(at film end)	below 500 g
	Exchange button	Focus mode exchange button	100 ± 20 g
		Drive mode exchange button	100 ± 20 g
		X(F4) mode exchange button	100 ± 20 g
		Reset mode exchange button	150 ± 50 g
	Lock button	Without lens mounted (early stage)	150 ± 50 g
		(final stage)	300 ± 100 g
		With lens mounted	Max. below 500 g
	Self-timer button	Force required to depress button	100 ± 20 g
		Time set by self-timer	12 ± 2 sec
2. Illumination	Brightness	Lights at approx. BV4	Should light at BV3 or below and should not light at BV5 or above, when AS5018·A light source is used.
	Effective range	Close range	below 1.5 m
		Long distance	over 3 m
		(optical axis of the lens intersects the beam axis at 3 m)	

2. QUALITY OF FUNCTIONS AND PERFORMANCE

Major check points	Items to be checked	Standards and check procedures
1. Film Wind	Force required for turning spool	210 ± 40 g
	Wind time	Less than 450 ms (using new batteries and VR 100 24EX film, temperature 20°C, humidity 65%)
	Frame speed of continuous wind	Approx. 1.5 frames/sec in cont. PF mode.
	Film frame spacing	1.85 ± 0.5 mm
	Perforation	The perforations must not align with the center line between adjacent film frames.
2. Film Rewind	Rewind time	Less than 17 sec. (using new batteries and VR 100 24EX film, temperature 20°C, humidity 65%)
3. Flange-focal distance and Optical Path Length	1. Flange-focal distance	46 mm
	2. Position of pressure plate rails (between mount and pressure plate rails)	46.20 ± 0.01 mm
	3. Tunnel space	$0.2^{+0.02}_{-0.01}$
	4. Optical path length of Viewfinder	46.05 ± 0.02
	5. Optical path length of AF	46.05 ± 0.028

4. EE Accuracy

1. ISO 100 K = 1.3 MS 5018 jig lens (F5.6 Fixed)

BV value	EE accuracy (EV)	
15	0 ± 0.6	equal to 1/1000 ~ 1/2000
11	0 ± 0.4	
7	0 ± 0.4	
4	$0^{+0.3}_{-0.6}$	

Aperture is controlled by the program line depending on brightness.

2. ISO switching accuracy MS 5018 jig lens (F5.6 Fixed)

ISO	BV measurement	EE accuracy (EV)
3200	7	$0^{+1.2}_{-0.7}$
1600	7	0 ± 0.6
800	7	0 ± 0.5
400	7	0 ± 0.5

ISO	BV measurement	EE accuracy EV)
200	7	0 ± 0.5
100	7	0 ± (Standard)
50	11	0 ± 0.5
25	11	0 ± 0.5

Difference between neighboring EV levels is 0.6V or more.

3. AE lock

AS5018 ISO 100 VB 15
EE Accuracy ±0.75EV
1/1000 ~ 1/200 ±0.85EV

Major check points	Items to be checked	Standards and check procedures
5. Shutter	Curtain speed	7.8 ± 0.2 ms (at 20°C)
	Exposure variation	Maximum difference in exposure time for 3 points (top, center, bottom) of entire picture: 0.6EV or lower at a shutter speed of 1/2000 0.3EV or lower at a shutter speed of 2 to 1/1000
	Stability of exposure	5 continuous measuring values of exposure time: 0.45EV or lower at a shutter speed of 1/2000 0.3EV or lower at a shutter speed of 2 to 1/1000
	Exposure time error	At the center of the time projected screen, using a system checker. at a shutter speed of 1/2000 within ± 0.55EV at a shutter speed of 2 to 1/1000 within ± 0.3EV

Shutter speed	Exposure time (ms)	Exposure time allowed (ms)
0.5	2000	1620 ~ 2460
1	1000	812 ~ 1230
2	500	406 ~ 616
4	250	230 ~ 308
8	125	102 ~ 154
15	62.5	50.8 ~ 76.9
30	31.3	25.4 ~ 38.5
60	15.6	12.7 ~ 19.2
125	7.81	6.35 ~ 9.62
250	3.91	3.17 ~ 4.81
500	1.95	1.59 ~ 2.40
1000	0.98	0.79 ~ 1.20
2000	0.49	0.33 ~ 0.71

6. Aperture Ring	Force required for turning (When aperture becomes smaller)	over 90 g
7. X(F4) Mode	Aperture is controlled to F4	± 0.6EV
	Shutter speed is controlled to 1/100	10 ms ± 0.3EV
8. X Contact	X time lag	0.3 ms ~ 1 ms (C channel → XSW ON)
		• C channel is on the border of the mask surface 0 ~ 0.6 ms is required for test
	Efficiency of X contact	over 60% at lower speed than 10 ms
	Insulation resistance of X	over 30 MΩ at DC 500V

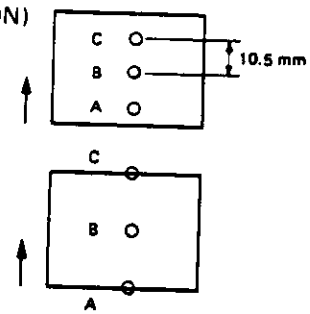

Major check points	Items to be checked	Standards and check procedures
9. Current Consumption	(1) When power is off	below 1 μA
	(2) When power is on an display is off	30 ± 30 μA
	(3) When display is on	90 ± 35 mA
	(4) During distance detection of AF	110 ± 40 mA
	(5) During AF operation	330 ± 100 mA
	(6) When mirror and aperture are in operation	500 ± 150 mA
	(7) During film winding	450 ± 150 mA
	(8) During film rewinding	400 ± 120 mA
	(9) When self-timer is in operation (LED on)	45 ± 15 mA
	(10) During flash recharging	90 ± 30 mA
	(11) Illumination is in operation	300 ± 60 mA
10. Battery Voltage during Operation	When battery mark blinks	5.05V
	When battery mark lights	4.55V
		Requirement is as follow:
11. Battery Life (Under standardized test conditions)	Power grip 100, using sum-4 Alkaline battery	25 rolls (using 24 EX film)
	Power flash grip 300, using sum-4 alkaline battery, 50% with flash	8 rolls (using 24 EX film)

3. INSPECTION PROCEDURES

These procedures include routine procedures and the standards of inspection for the main functions.

Procedures	Quality	Defect grade	Standards	Remarks
1. Detach body cap	1. Smoothness in attaching and detaching body cap	B.	1. Attachment and removal must be carried out smoothly	
2. Mount and remove power grip	1. Reliability of lock 2. Smoothness in mounting and removing power grip	A. B.	1. Removal not possible without pressing lock button. 2. Removed smoothly by pressing lock button. 3. Mounting and removing is carried out smoothly if power grip is aligned to "index position"	
3. Turn main switch ON and OFF	1. Reliability of switching ON 2. Accuracy of LCD display 3. Reliability of switching OFF	AA. A. A.	1. Indication is displayed on LCD panel when main switch is turned on. 2. "ISO 100" and "battery capacity are displayed when switch is turned on, and display changes to "ISO100" "frame counter) 0" "(patrone) blinks" after approx. 3 sec. 3. LCD display goes off when switch is turned off.	
4. Open back cover and load film	1. Reliability of opening back cover 2. Reliability of closing back cover 3. Reliability of winding film leader 4. Smoothness in opening and closing of back cover	AA. AA. A. B.	1. No opening without pressing lock button. 2. Opened (by the force of pressure plate spring) smoothly by pressing lock button. 3. Automatically locked when back cover is closed. 4. Leader wind starts* when back cover is locked (release shutter button 4 times), and frame counter reads "1". 5. Opening and closing of rear cover is carried out without touching camera body, etc.	*Leader wind starts automatically when main switch is turned ON.
5. Press release button	1. Reliability of release 2. Accuracy of frame advancing display on LCD 3. Certainty of film ending	AA. A. A.	1. When the release button is pressed, the shutter is released and the film advances one frame. 2. On releasing, the frame counter advances one frame and film advancing is displayed on the LCD. 3. When the film reaches the end, Ⓡ is displayed on the LCD and the shutter cannot be released.	

Procedures	Quality	Defect grade	Standards	Remarks
6. Press R button and rewind film	1. Reliability of R button operation	A.	1. Press R button while pushing lock knob in the direction shown by the arrow to start rewinding. 2. Character " R " of R disappears and the film advance indication is displayed on the LCD. 3. When rewind ends, the frame counter reads "0" and ◯ blinks.	* ◯ blinks for approx. 30 seconds.
7. Load film cartridge with different ISO sensitivity	1. Accuracy of display of ISO exchange 2. Correct display of ISO sensitivity in viewfinder	A. A.	1. ISO 100 is displayed on the LCD when film is unloaded. 2. When a film cartridge with a different ISO sensitivity is loaded, the correct ISO sensitivity must be displayed. 3. Program display (shutter speed, FNO must change depending on the difference in ISO sensitivity.	*ISO 400 or 1600 is recommended for the test. *This items is inspected during lens-mounting.
8. Mount lens	1. Reliability of lens mounting	A.	1. Lens mounting must be carried out smoothly. 2. At the position where mounting is completed, the E button lock is engaged and the lens must be stabilized. 3. When mounting is completed, the coupler must lock. The coupler should not idle (even if the stopper is pressed strongly).	*If the power switch is turned ON on completion of mounting, lens is set at ∞ (coupler lock).
9. Press AF/PF exchange button (1) in AF mode	1. Reliability of switching for AF/PF exchange button 2. Reliability of AF operation (in [AF] mode) 3. Reliability of AF lock 4. Accuracy of display for in-focus/not in focus condition 5. Release of lock when focusing is impossible 6. Reliability of illumination light	A. A. A. A. A. A.	1. LCD display changes from [AF] (PF) to [PF] (AF) when AF/PF exchange button is pressed. 2. Lens moves in accordance with the detected distance of the subject in distance measuring frame and release is OK. 3. AF lock works when release button is pressed halfway. 4. Green lamp: in focus Red lamp: out of focus 5. In the event that focusing is impossible, the lens is set to ∞ and the release is locked. 6. LED (red) is turned on (for approx. 1 sec) when light level is low (below BV 8)	[AF] on [AP] blinks

Procedures	Quality	Defect grade	Standards	Remarks
(2) in PF mode	1. Reliability of PF operation 2. Reliability of PF shift operation	A. A.	1. Shutter is released immediately when release button is pressed (whether in focus or out of focus). 2. Lens shift operation is possible with shift knob (moves forward and back). 3. Lens moves back when shift knob is pushed to the left, and moves forward when knob is pushed to the right. 4. Shift operations consist of a slow movement and a rapid one.	
10. Press X mode button (ϟF4)	1. Reliability of X mode switching	A.	1. [ϟF4] blinks on LCD and goes off when pressed again. 2. Shutter speed is automatically set to 100 when using A series lenses.	
11. Press drive exchange button	1. Reliability of drive switching	A.	1. [SINGLE] / [CONT] appears on the LCD. 2. When [SINGLE] is displayed, the shutter is released one when the release button is pressed. 3. When [CONT] is displayed, the shutter is released continuously while the release button is held.	
12. Operate self-timer button	1. Reliability of self-timer mode 2. Reliability of self-timer operation 3. Reliability of cancellation of self-timer mode	A. A. A.	1. When the self-timer button is pressed, [⏲] is displayed. 2. If the release button is pressed in this state, the self-timer will begin to operate. 3. If the release button is pressed in the self-timer mode, illumination (red LED) blinks for approx. 10 seconds and the shutter can then be released. 4. In the event that the subject cannot be brought into focus in the AF mode, the self-timer will not operate. 5. The self-timer mode can be cancelled if the self-timer button is pressed again or if the shutter is released in self-timer mode.	
13. Press AE lock button	1. Reliability of AE lock	A.	1. While the AE lock is pressed, the program display does not change even if the brightness of the subject changes.	

Procedures	Quality	Defect grade	Standards	Remarks
14. Enter AF mode and operate shift	1. Reliability of program shift 2. Reliability of reset of program shift	A.	1. The program display in the view-finder changes. (time in seconds (in 1/3 steps) is shown in the upper position and F number (in 1/3 steps) is shown in the lower position.) 2. (PROGRAM) on LCD blinks. 3. Push the shift knob to the left, Time in seconds (upper) →low speed F number (lower) → increases When pushed to the right, the shift is reversed. 4. Reset by pressing the reset button or reset automatically in approx. 30 seconds.	In the PF mode, program shift is not available because function of shift knob changes to power focusing.
15. Press reset button	1. Reliability of reset of LCD display		1. If the reset button is pressed, the LCD display in any mode returns to the normal display mode. (However, the frame counter does not change.) The lens is reset to ∞.	•Normal display is: PROGRAM Q 12 AF SINGLE However, the Q symbol disappears in approx. 30 seconds.

C

DISASSEMBLY PROCEDURES

C. DISASSEMBLY PROCEDURES

CONTENTS

- **Disassembly Chart**

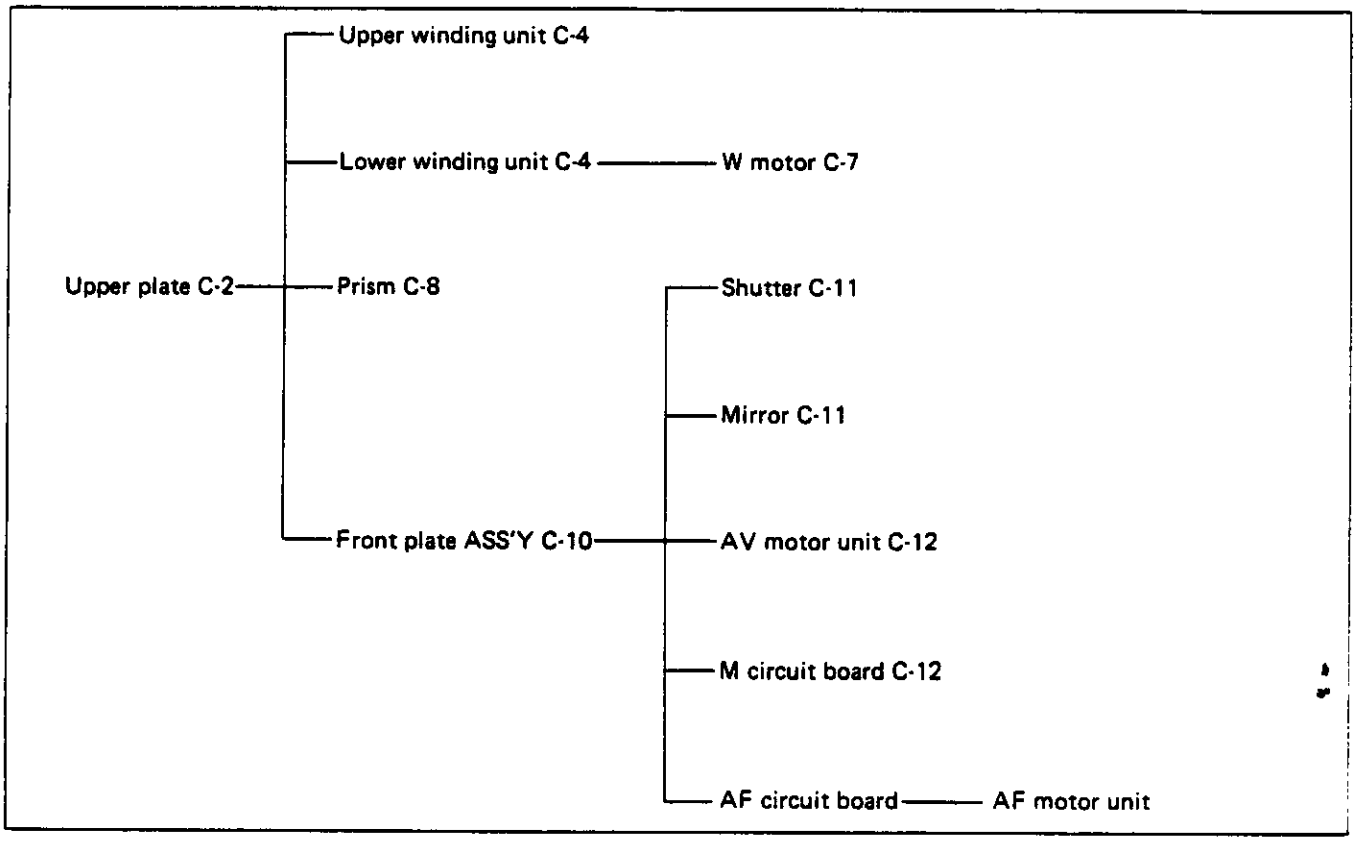

About exterior clearning

- Do not use cleaning fluids containing solvents. (may cause color to change or erase printed letters)
- Wipe with Chamois leather or Fronsolve AE. (wipe two or three times)
- To clean, use Fronsolve S3.
- Do not blow air directly on the shutter curtain.
- To remove dirt from the shutter curtain, coil the tweezer with finger-stall and wipe lightly in one direction only (from right to left).

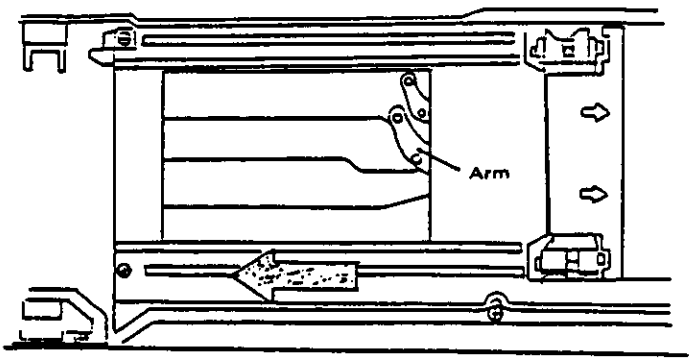

Main parts	Parts to be removed	Q'ty	Removable parts	Remarks
1. REMOVAL OF UPPER PLATE				(Refer to diagram)
1. Lower plate	PUTB X 3SH PUTB X 2SH	5 1	Lower plate CF0670	Slide lock knob and detach lower plate.
2. L grip	PUTB1.6X5SB PUTB2X3SH	1	L grip CF0665	
3. Front cover	PUTB1.4-135SH PUTB1.6X2.5SN PUTB1.6X4SH	1 2 1	Front cover ZC6130	
4. Upper plate	PUTB1.6X3SN PUTB1.6X3.5SH PUTB2X3.5SH 3PUTB1.6X4SH C SCREW 14 CF 0581	2 1 1 2	Upper plate ZC6133 CNW14 CF0585 C rubber 14 CF0584	

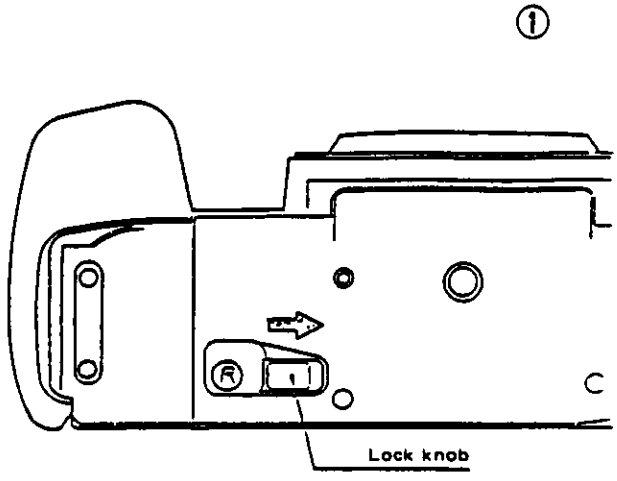

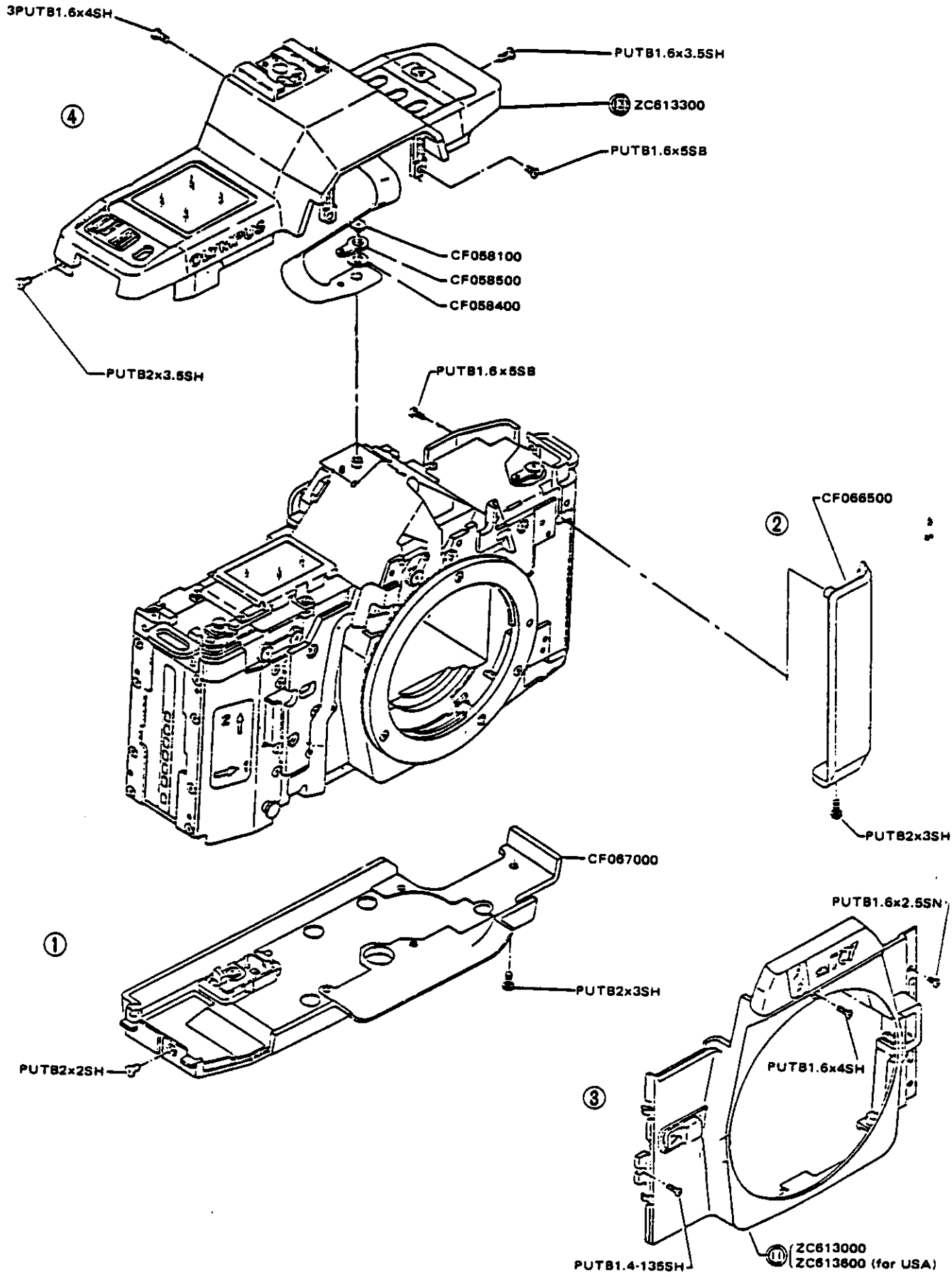
3PUTB1.6x4SH
PUTB1.6x3.5SH
④
ZC613300
PUTB1.6x5SB
CF058100
CF058500
CF058400
PUTB2x3.5SH
PUTB1.6x5SB
CF066500
②
PUTB2x3SH
CF067000
①
PUTB2x3SH
PUTB2x2SH
PUTB1.6x2.5SN
PUTB1.6x4SH
③
PUTB1.4-135SH
ZC613000
ZC613600 (for USA)

Main parts	Parts to be removed	Q'ty	Removable parts	Remarks

2. UPPER WINDING UNIT

1. Shift frame	PUK1.4X2.5SN	1	Shift frame ass'y	(Refer to diagram)
	PUTB1.6X5SN	1		
2. Head holder	RBJ-A20	1	CF0577 Head holder	
	PUTB1.6X4SN	1	CF0573 RES rubber	
	PUK1.4X3.5SN	2		
3. Head plate	CF0583 FD Screw	1	CF0585 CNW14	
			CF0584 C rubber 14	
	CF0581 C screw 14	2	CF0584 C rubber 14(2)	
	CF0587 CNW 16	1		
	PUTB1.6X3SN	1	ZC6124 Head plate	
4. Unsolder M circuit board	W motor armature			
	RWSW armature			

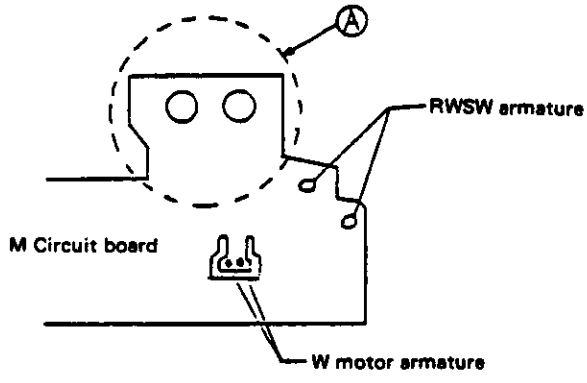

Lift O section of M circuit board from body dowel and then desolder.

5. W1 base plate	PSTB1.4X3SN	2	CF0384 W1 base plate	
	PUTB1.6X1.5SN	1	CF0379 Rear lever	
	PSTB2X3SN	2	CF0380 6 gear	
			CF0381 Hold lever collar	
			CF0382 Hold lever	
			CF0383 Rear lever spring	
6. W2 base plate	ER1.5UO	1	ZJ7038 W2 base plate	
			CF0378 52 gear	

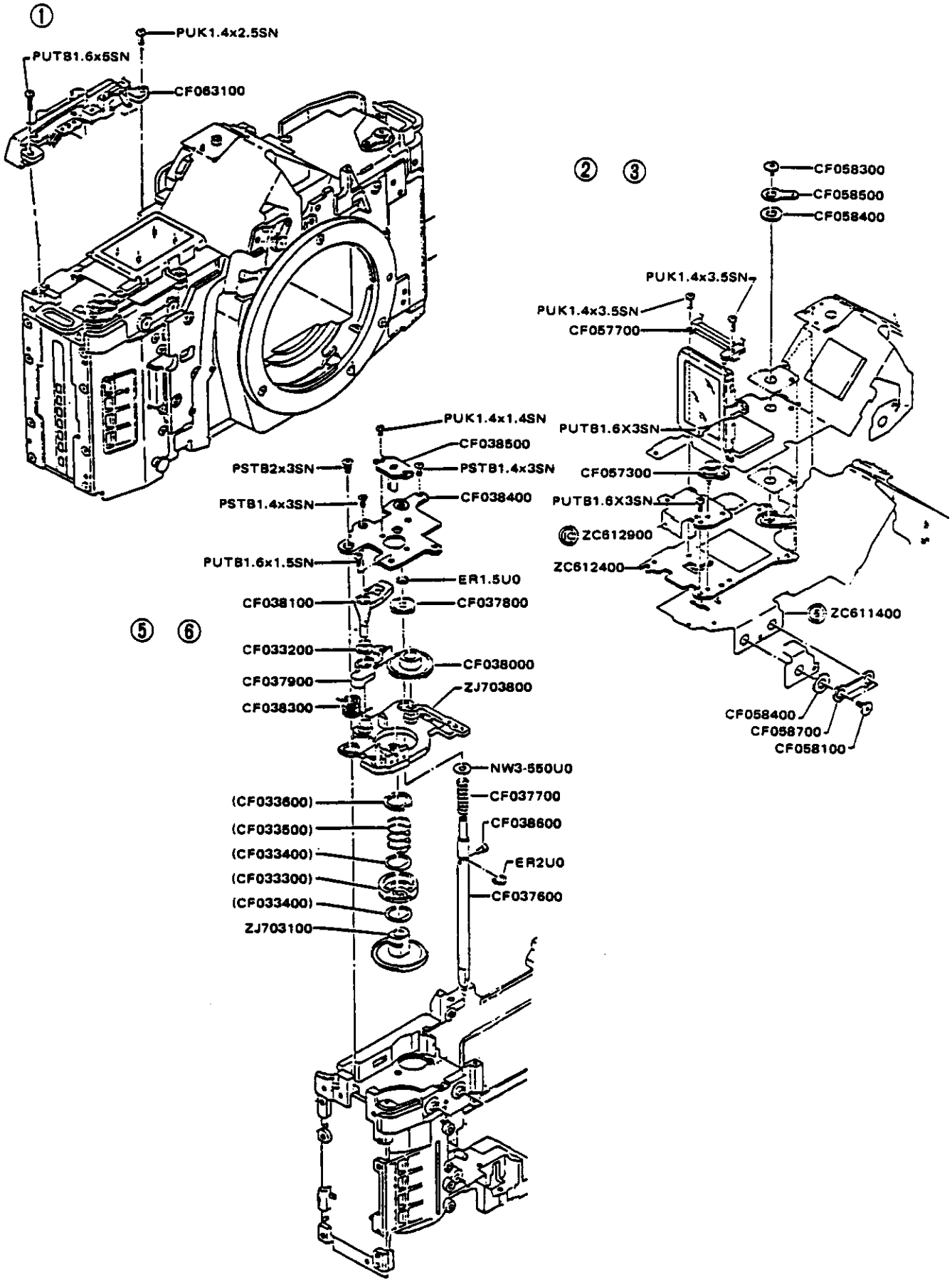
①
PUK1.4x2.5SN
PUTB1.6x5SN
CF063100
②
③
CF058300
CF058500
CF058400
PUK1.4x3.5SN
PUK1.4x3.5SN
CF057700
PUTB1.6X3SN
CF057300
PUTB1.6X3SN
ZC612900
ZC612400
ZC611400
CF058400
CF058700
CF058100
PUK1.4x1.4SN
CF038500
PSTB2x3SN
PSTB1.4x3SN
PSTB1.4x3SN
CF038400
PUTB1.6x1.5SN
ER1.5U0
CF038100
CF037800
⑤
⑥
CF033200
CF038000
CF037900
ZJ703800
CF038300
NW3-550U0
(CF033600)
CF037700
(CF033500)
CF038600
(CF033400)
ER2U0
(CF033300)
CF037600
(CF033400)
ZJ703100

Main parts	Parts to be removed	Q'ty	Removable parts	Remarks

3. REMOVAL OF LOWER WINDING UNIT

1. Lead wire	RBJ-B20 RBJ-P47 RBJ-M34 RBJ-B30	1 1 1 1		

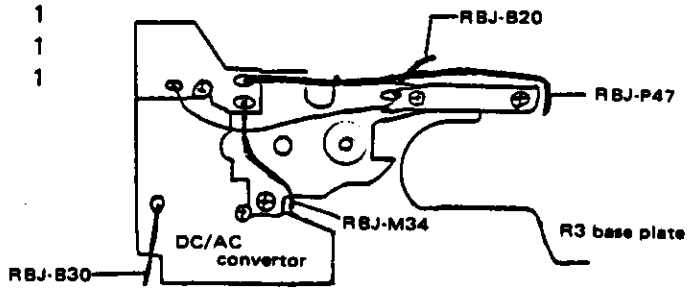

2. R3 base plate	PUTB2X3SN	3	ZC6199 R3 base plate	
3. DC circuit board	PUTB1.4X3.5SN	2	CE5760 L insulation	
4. R button	CF0563 R button		CF0562 R spring CF0555 Claw CF0554 Sprocket gear NW 3-550U0	R button is a left-handed screw
5. W motor armature (refer to No. C-4)	Desolder from upper M circuit board			
6. Lower winding unit	PUTB2X3SN PUK1.7X9SN PUK1.7X14SN	3 1		ZC6116 lower winding unit

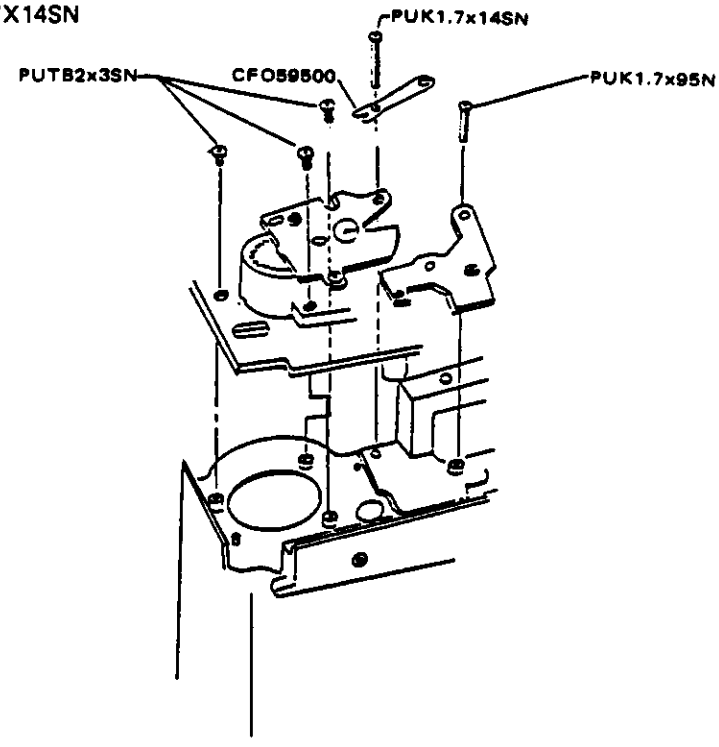

Main parts	Parts to be removed	Q'ty	Removable parts	Remarks
1. Removal of W motor				
7. W4 base plate	PUTB2X3SN	2	ZJ7030 W4 base plate ZJ7028 PL1 ZJ7029 PL2 CF0326 PL washer (2)	
8. W motor	PUK1.4X5.5SN	2	CF0315 W3 washer ZC6163 W motor	

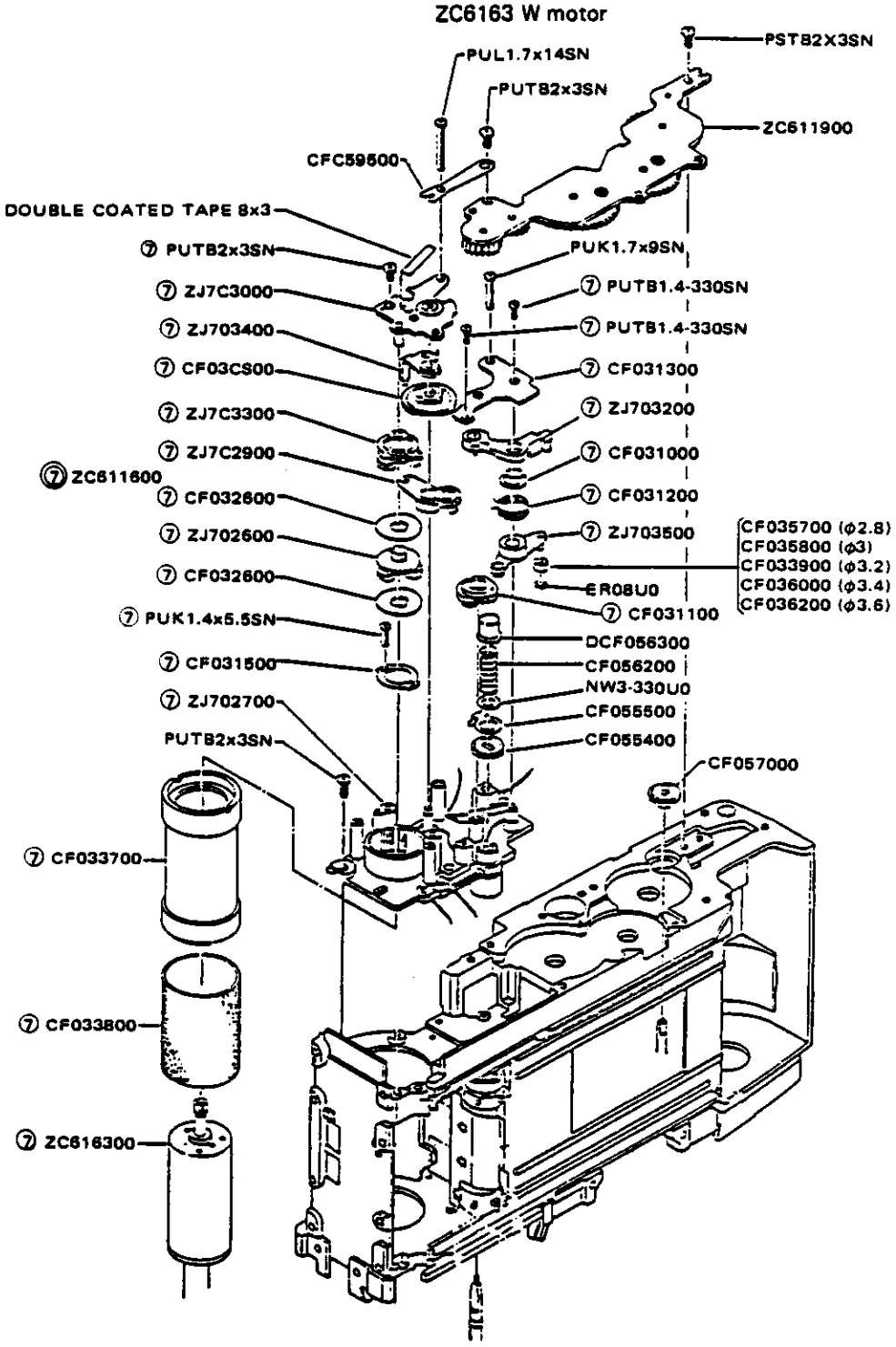

4. REMOVAL OF PRISM

(Refer to diagram)

1. Desolder W motor armature and RWSW armature and then remove M circuit board on the upper right. (refer to No. C-4)

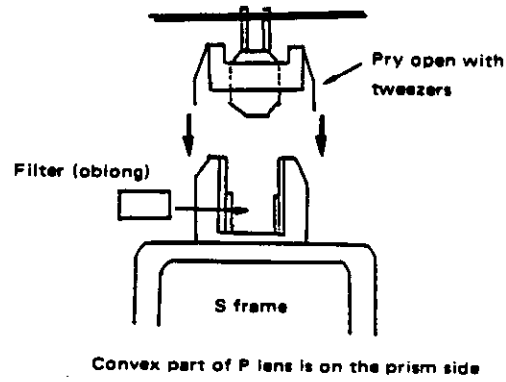

	Main parts	Parts to be removed	Q'ty	Removable parts	Remarks
2.	SBC Receiver	CF0193SBC receiver	1	CF0242 Filter CF0192 P lens	
3.	Illuminator	PUKB1.6X3SN	1	ZC6128 Illuminator	
4.	M circuit board connector (upper side of B mount)	CF0582C screw 16	1	CF0585 CNW14 CF0584 C rubber 14	
5.	FPC base S frame	PUK1.7X4.5SN PUK2X4SN	2 2	CF0589 FPC base ZC6111 S Frame	
6.	Prism	PUK2X2.5SN	2	CF0217 Arm CF0229 Focus spring (4) ZJ7026 Prism	
7.	FD circuit board	3PUTB1.6X4SN	2	ZJ6161 FD circuit board CF0190 F prism	

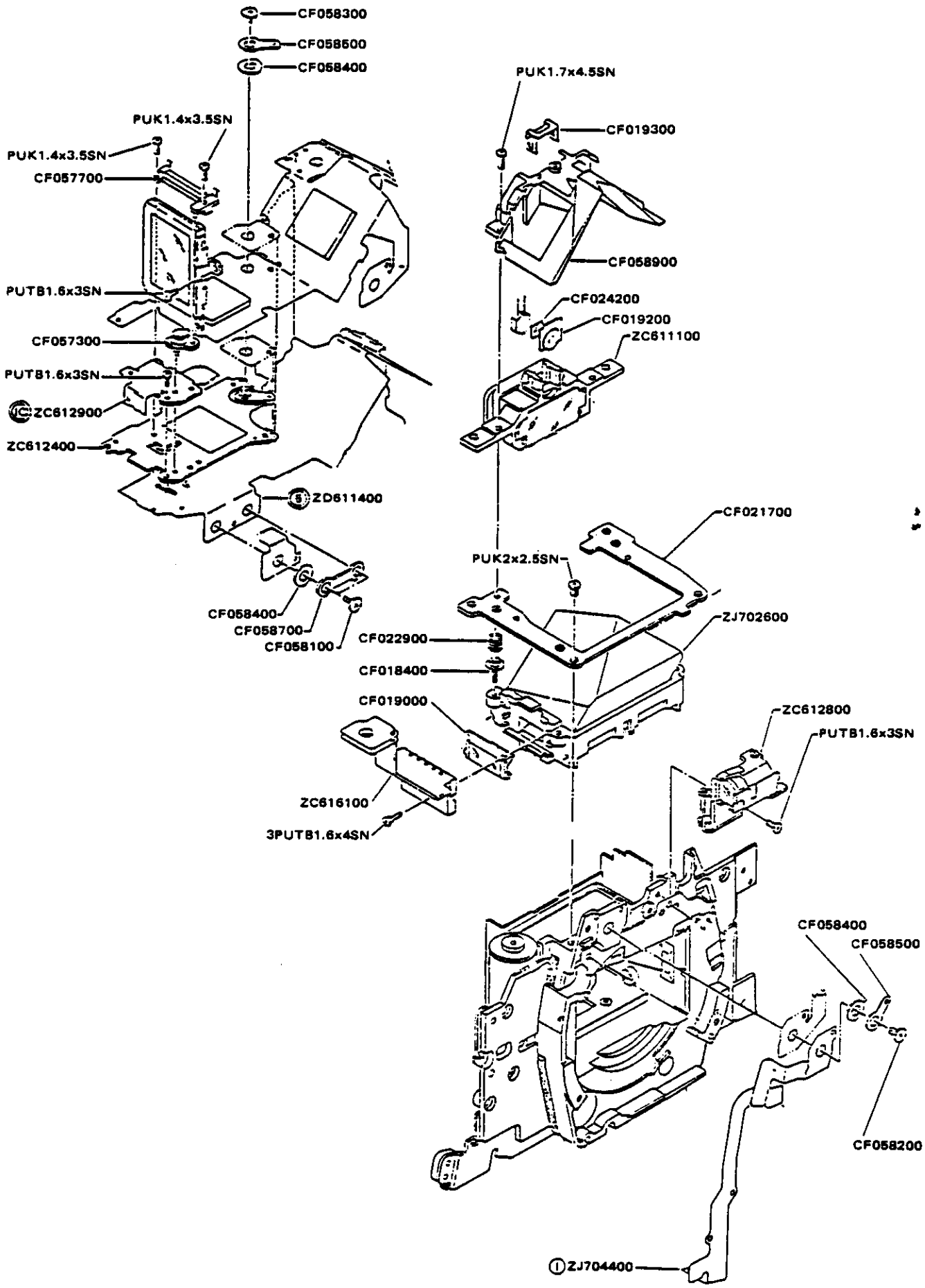
CF058300
CF058500
CF058400
PUK1.7x4.5SN
PUK1.4x3.5SN
PUK1.4x3.5SN
CF057700
CF019300
CF058900
PUTB1.6x3SN
CF024200
CF019200
CF057300
ZC611100
PUTB1.6x3SN
ZC612900
ZC612400
ZD611400
CF021700
PUK2x2.5SN
CF058400
CF058700
CF058100
ZJ702600
CF022900
CF018400
CF019000
ZC612800
PUTB1.6x3SN
ZC616100
3PUTB1.6x4SN
CF058400
CF058500
CF058200
ZJ704400

Main parts	Parts to be removed	Q'ty	Removable parts	Remarks

5. REMOVAL OF FRONT PLATE ASS'Y

1. Desolder W motor armature and RWS armature and then remove M circuit board on the upper right. (refer to No. C-4)

2.	CF0581C Screw 14	1	CF0584 C rubber 14	Loosen the screw which holds the M circuit board on the upper left.
	CF0584C Rubber 14	1	CF0585 CNW 14	
	PUTB1.6X4SN	1		Lift up M circuit board from connector dowel and convex part for positioning.
3. G plate 1	PSTB2X2.5SG	8	ZC6123 G plate 1	
4. Front plate ass'y	PUK2X4SN	2	Front plate group	
	PUK2X6SN	1		
	PUK2X8SN	1		
	PUTB2X5SN	2		
	PUTB2X6SN	1		

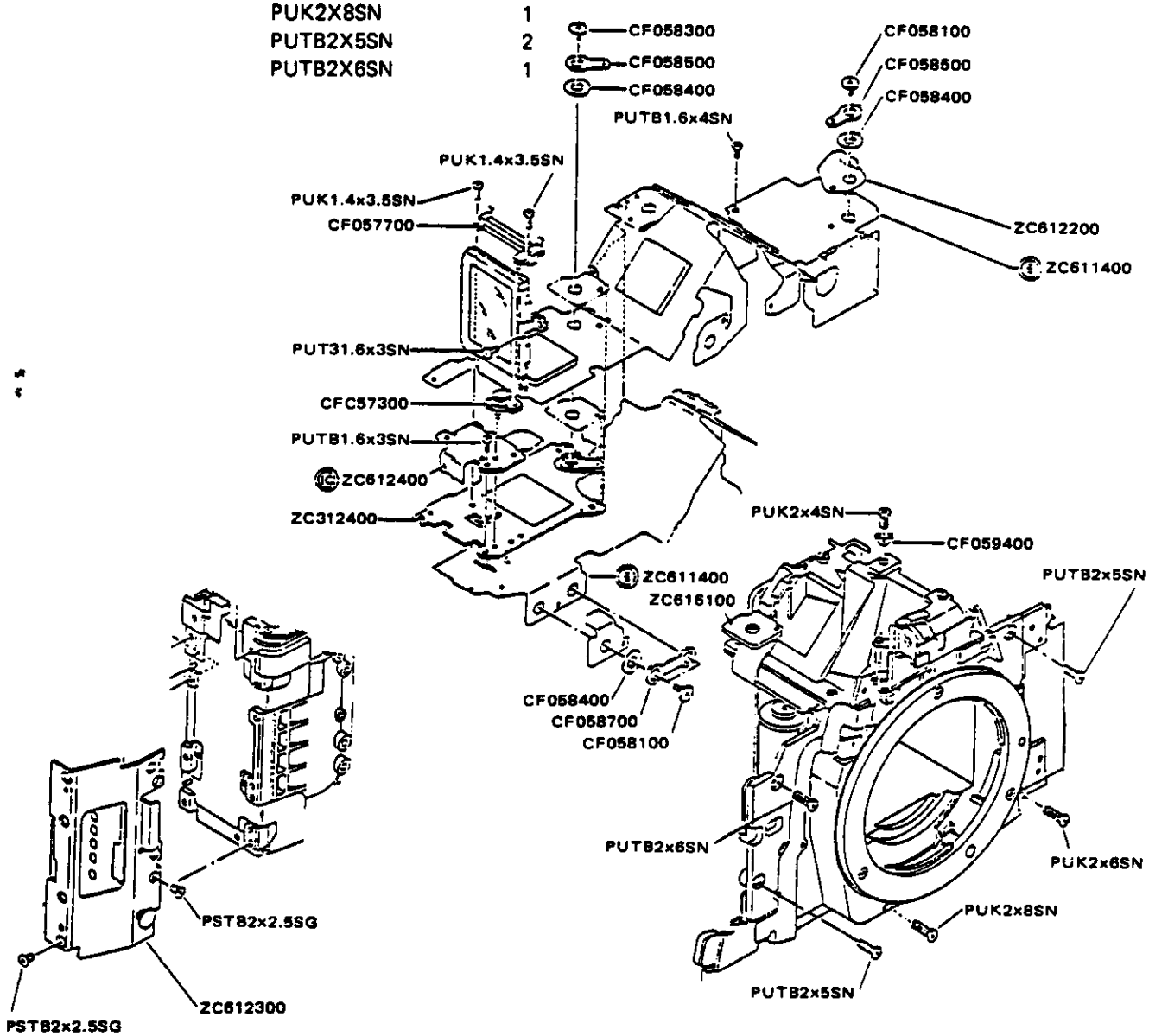

Main parts	Parts to be removed	Q'ty	Removable parts	Remarks
1. Removal of shutter				
Shutter	PUTB1.4-230SB	2	ZC6135 Shutter	
	PUK2X3.5SH	1	CF0533 L. proof 1	

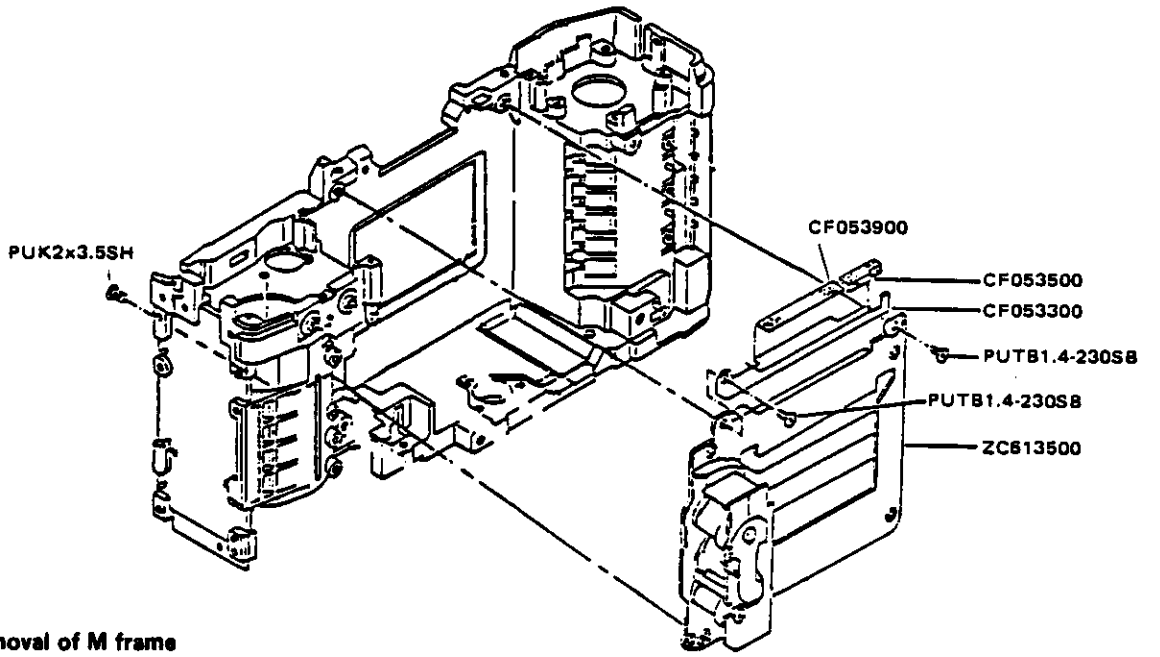

2. Removal of M frame				
1. Shaft cover	PUK1.4X2.2SB	1	ZC5190 Shaft cover CF0211 MD spring	
2. M frame	CF0167 M spring hook CF0165 M Up shaft CF0209 M shaft	1 1 1	CF0166 M Up Collar ZC6102 M frame	Remove M frame from the back side. Push M frame to the left and incline the right side downward. Remove the convex part on the right of M frame from the M base plate.

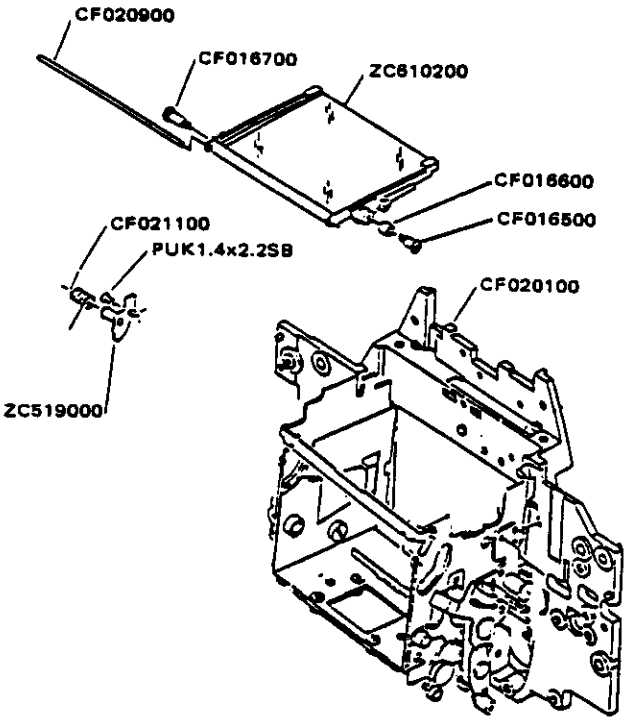

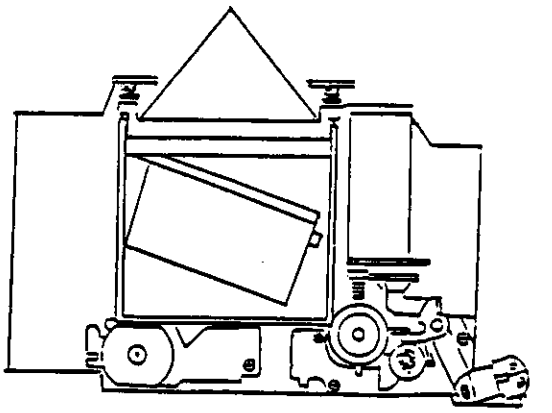

Main parts	Parts to be removed	Q'ty	Removable parts	Remarks
3. Removal of AV motor unit				
A base plate ass'y	PUK2X2.5SN	2	ZC6103 A base plate ass'y	To remove the A base from the front plate, use a finger to lift the Mu roller on the R base plate and then detach. Since the FPC is attached to the front side of the front casting, remove it (or unsolder P.1) and remove the unit.

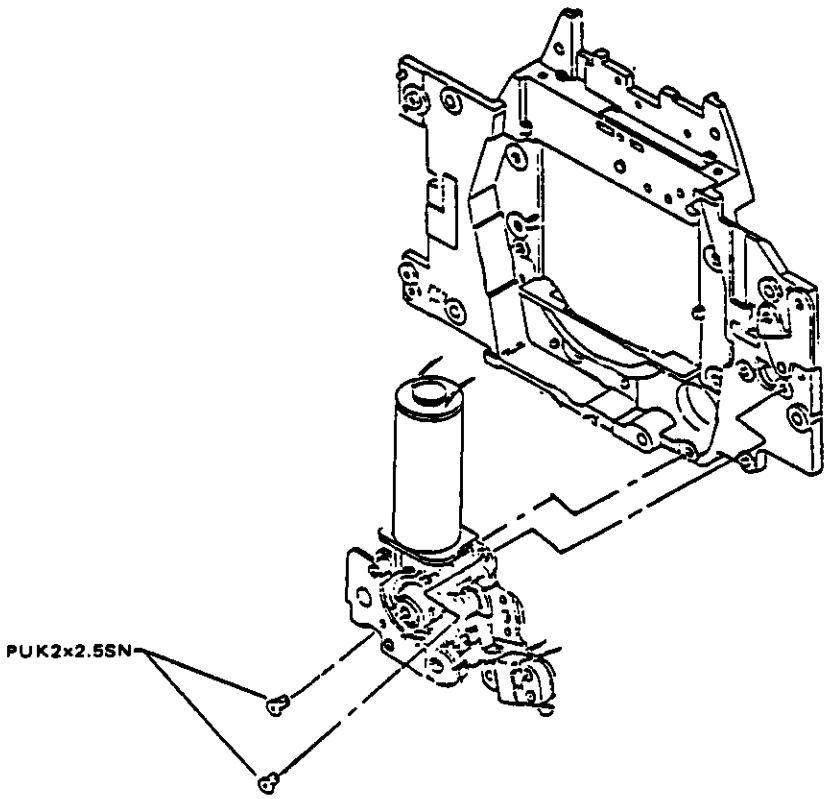

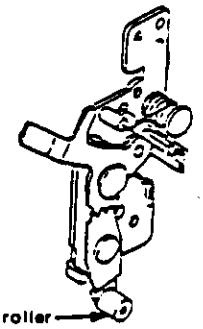

4. Removal of M circuit board

1. Desolder the AV motor and AF motor wires.

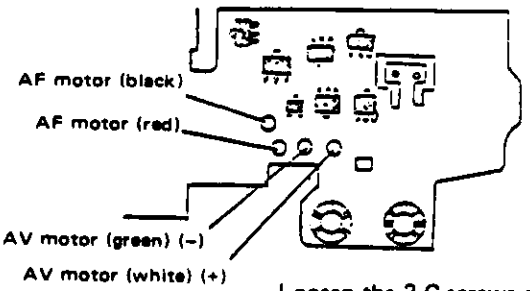

2. M circuit board	PUK1.4X1.5SN	1	Loosen the 3 C screws of the connector section as shown in the diagram and the screws holding SBC cover.
	CF0581 C screw 14	1	
	CF0582 C screw 16	2	

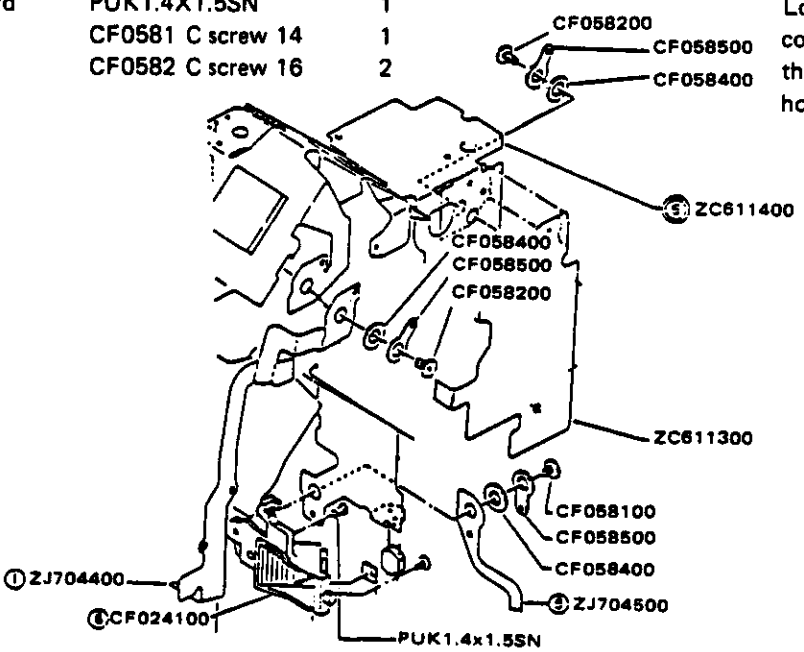

Main parts	Parts to be removed	Q'ty	Removable parts	Remarks

5. Removal of AF circuit board

F circuit board	CF0236 Sensor screw	3	CF0235 Sensor screw 3	
	3PUTB1.6X2SN	1	ZC6113 F circuit board	

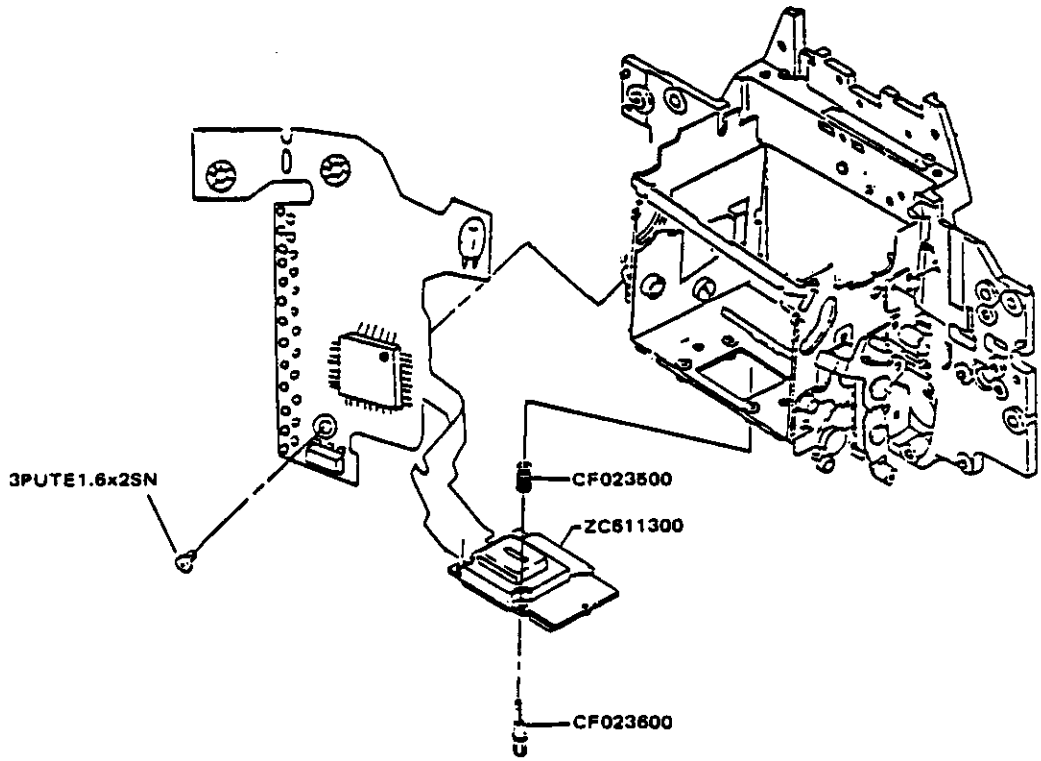

6. Removal of AF motor unit (Refer to diagram on the following page)

1. B Mount F	PUK2X4.5SG	3	CF0216 B Mount F	
2. LC Base	PUK2X2.5SN	1	ZC6106 LC Base	
3. F Base plate (AF motor unit)	PUK2X2.5SN	2	ZC6110 F Base plate	

① ②

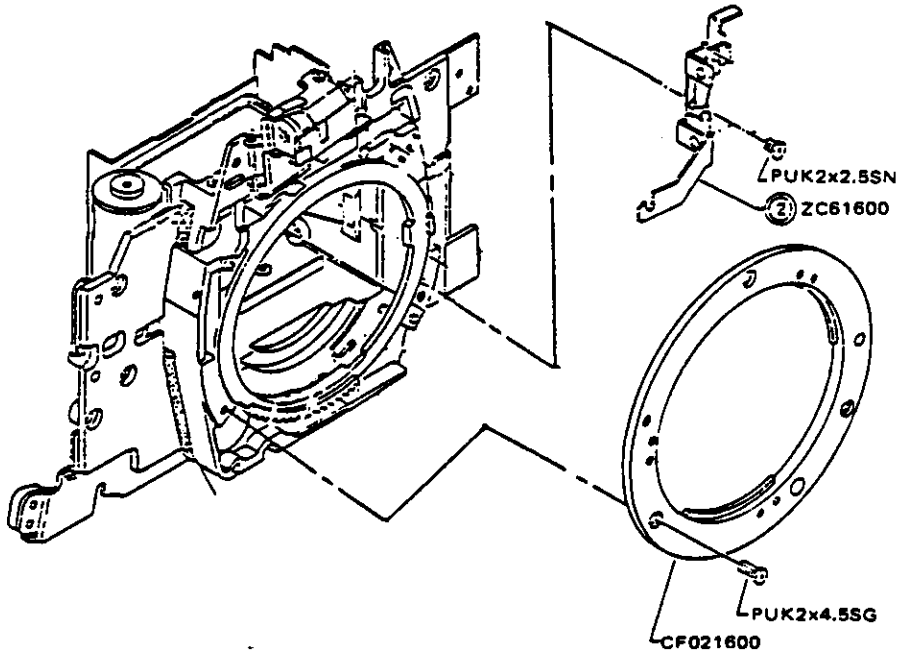
PUK2x2.5SN
③ ZC61600
PUK2x4.5SG
CF021600

③

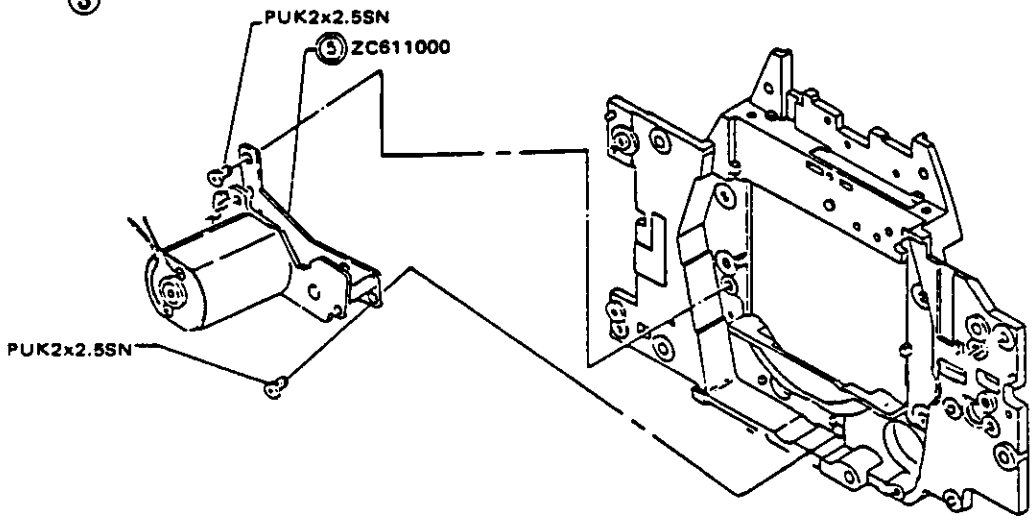
PUK2x2.5SN
⑤ ZC611000
PUK2x2.5SN

D

REASSEMBLY AND ADJUSTMENT PROCEDURES

D. REASSEMBLY AND ADJUSTMENT PROCEDURES

CONTENTS

1. MECHANISM

1. Reassembly of Lower Winding Unit (ZC611600)

◇ Installation of W motor

Place the motor such that the red wire ⊕ is near the grip and the stripped wire ⊖ is near the lens. Install the motor in the W3 base plate with two PUK1.4X5.5SN screws.

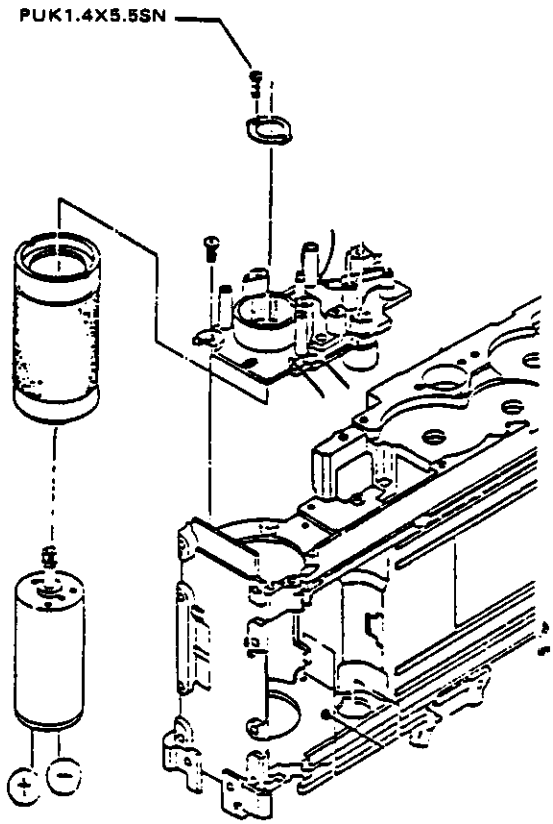

◇ Solder the W motor wires

Solder the red wire ⊕ to the outside and the ⊖ wire to the prism-side of the M circuit board.

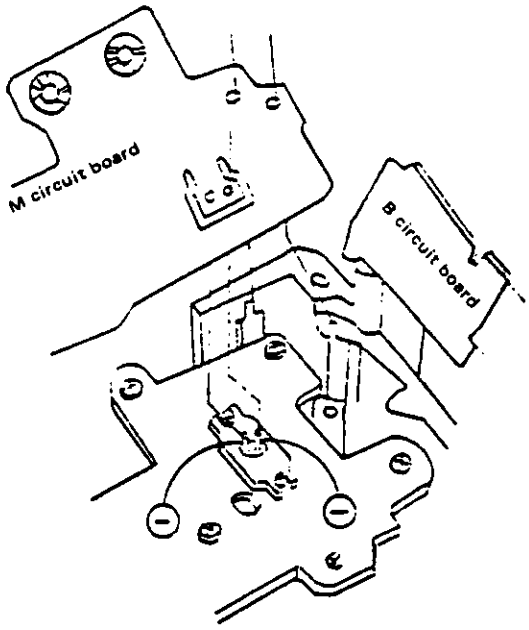

◇ Position the CF0308 2 gear as shown in the diagram.

◇ Insert the convex part of the R3 arm ZJ7034 into the concave part of the W4 base plate ZJ7030. (refer to diagram A)

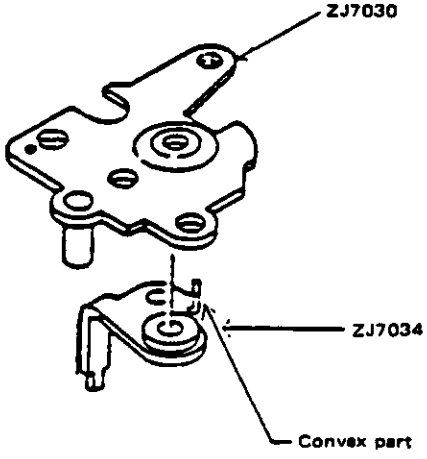

◇ Engage the W stopper spring CF0312
The W Stopper pin must be closer than the WUSW 2 is to the 4 cam gear CF0311.

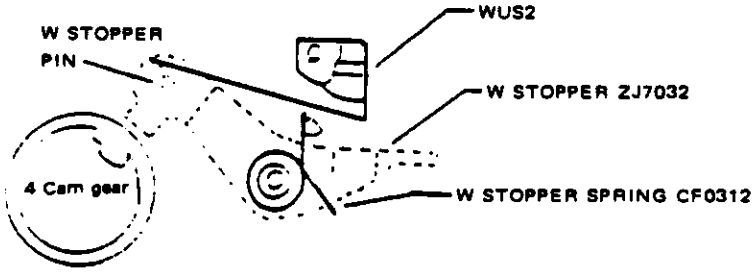

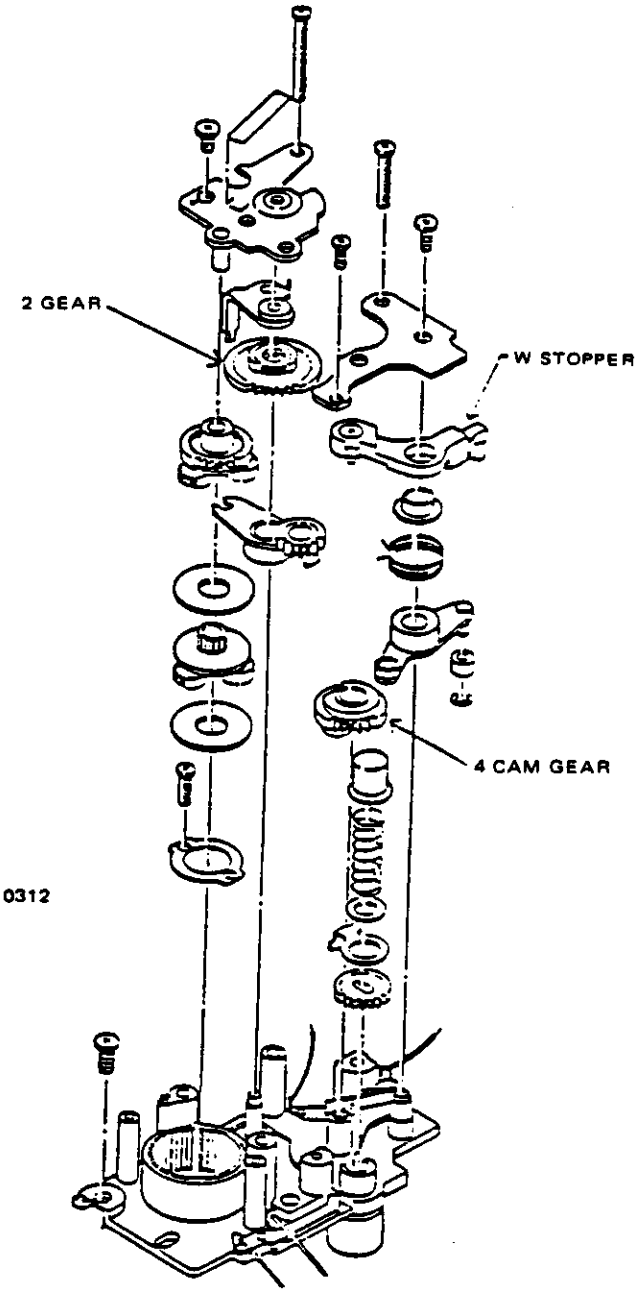

◇ Timing adjustment of WUSW

- Connect the tester to the WUSW.
- Insert W stopper ZJ7032 into the adjustment gap of the 4 cam gear CF0311.
- Rotate the W stopper pin and adjust the position to where the WUSW just changes from ON to OFF.
- Make sure that the WUSW turns ON gap A in the 4 cam gear.

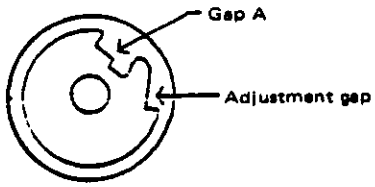

4 CAM GEAR

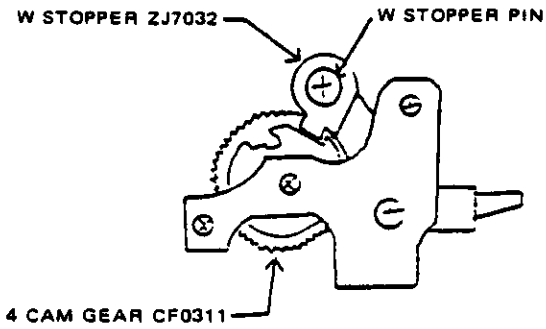

◇ W motor operating current

The W motor should draw the following current when the motor is actuated at 4±0.1V:

Rotation < 120 mA

Reverse < 100 mA

(Set the W stopper free when the motor rotates.)

2. Reassembly of Upper Winding Unit

◇ Reassembly of holding lever CF0381, rear lever
◇ CF0379 and rear lever spring.

Close the rear cover and press the R button. When the 52 gear CF0378 is raised, the hold lever should be inserted and pressed firmly by the contact pressure of RWSW.
(RWSW turns ON)

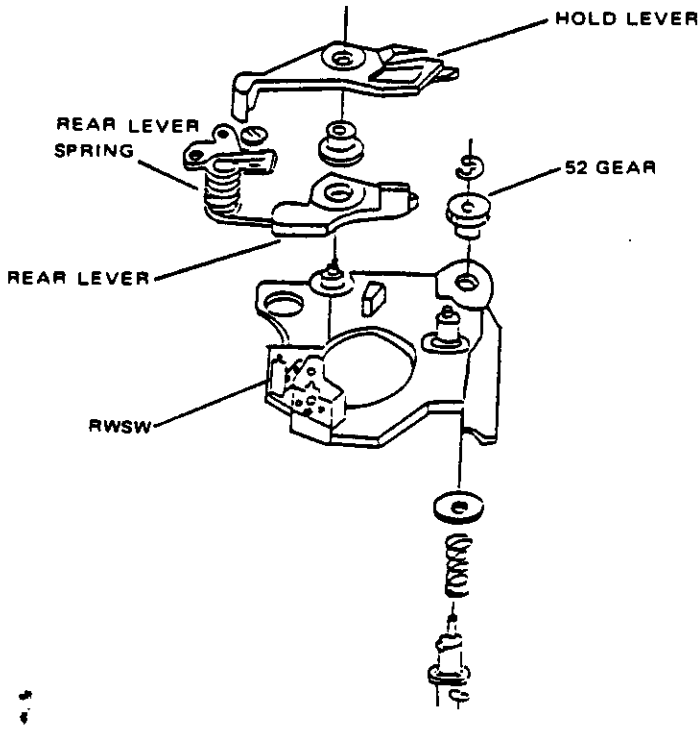

3. Reassembly of A Base Plate Unit

◇ Setting torque of aperture spring of A base plate 2 ZJ7040.

Rotate A8 gear CF0027 4 times from the state where the aperture spring torque is 0.

(The procedure for checking the torque is described in No. D-7)

After setting the torque, stop A8 gear CF0027 by inserting the R stopper shaft.

(The R stopper shaft is approx. 1ϕ in diameter similar to the guide shaft B.C.F0509 or XZ-3.4F shaft CE7637.)

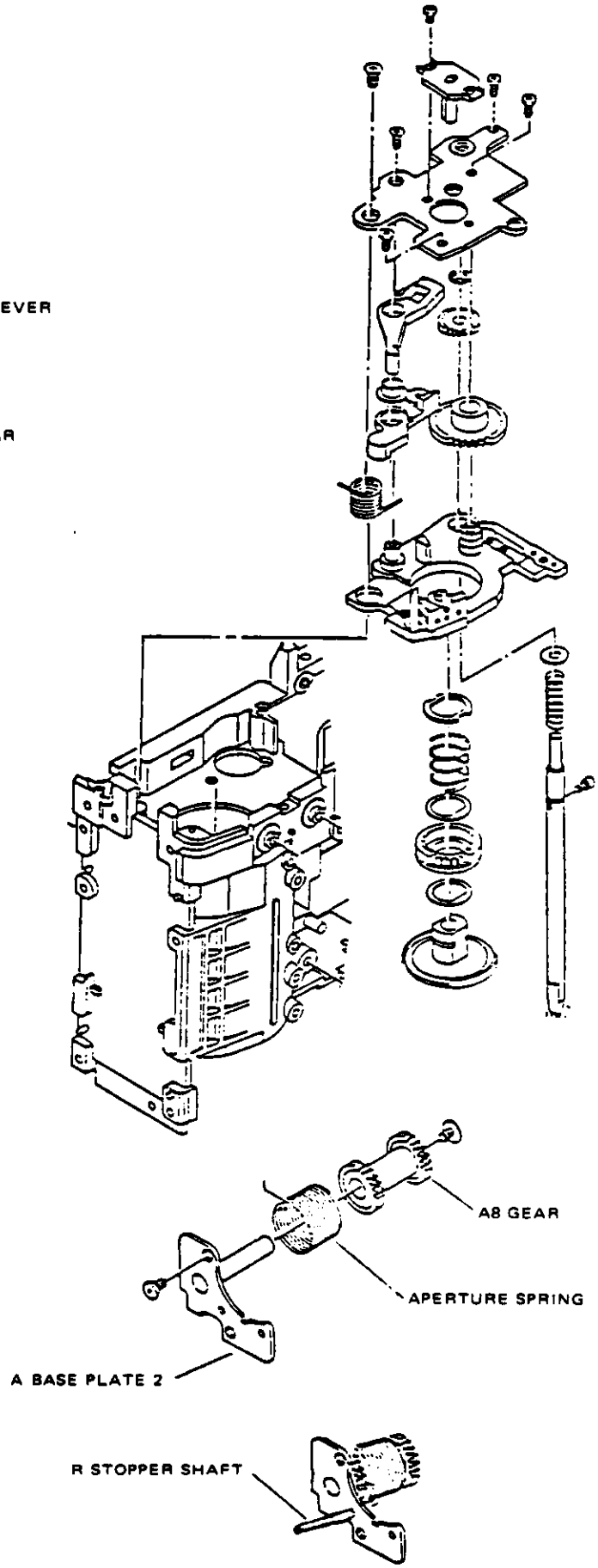

4. Attachment of A Base Plate 2 ZJ7040

- Release the ST lever from the ratchet.
- Position the mark (▽) on the A6 gear 1ZC6153 so as to face downward.
- Rotate the A7 gear clockwise until it catches a Pawl and stops.
- This operation removes any backlash in the A6 gear 2 CF0025 and the A6 gear 1 is positioned as shown below.

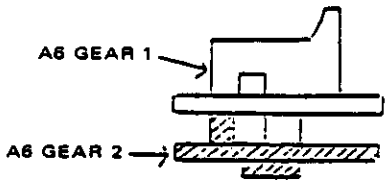

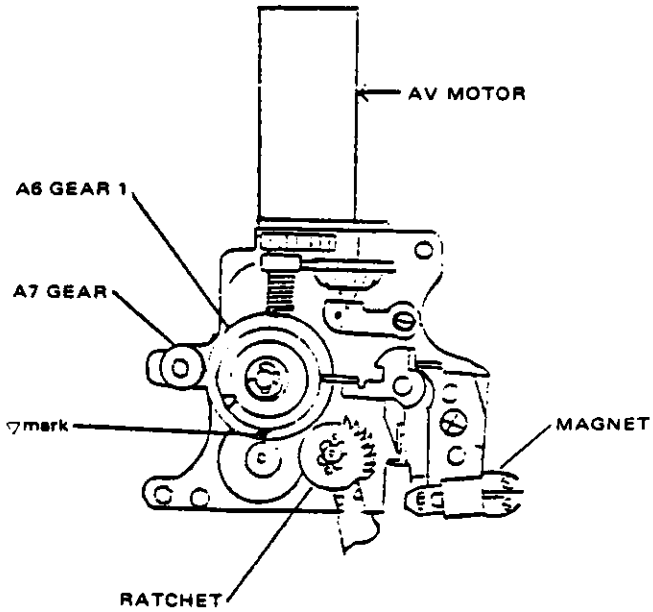

- After releasing the magnet, engage the ST lever with a ratchet.
- Secure the A base plate with two PUK1.4-606SN. The extention line of the ▽ mark on A gear 1 must fall within the groove on A base plate 2.
- After reassembly, remove the ST lever from the ratchet.

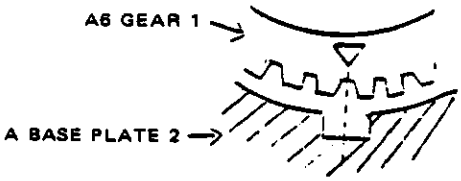

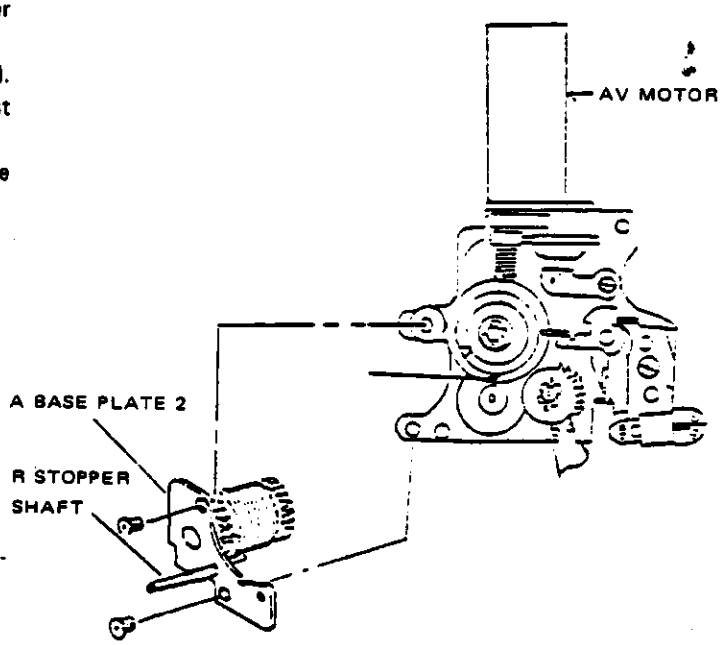

◎ Install the AV motor so that the ⊕ lead is positioned near the lens. (front plate side)

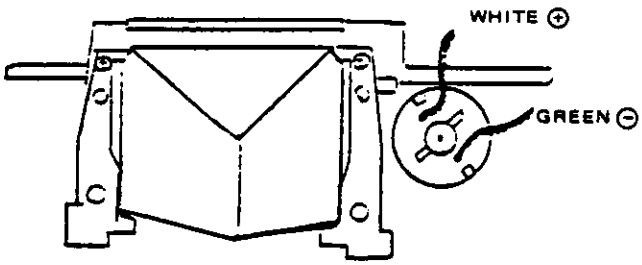

- Attaching A base plate unit to the front plate. While holding down the mirror, stand A base plate on its end and then insert the A8 gear into the hole on the front plate.
- Rotate the A base plate unit to the left 90 degrees and insert the cam of A6 gear 1 under MU roller.
- Insert the dowel on the front plate into the dowel hole in the A base plate and secure using two PUK2X2.5SN.

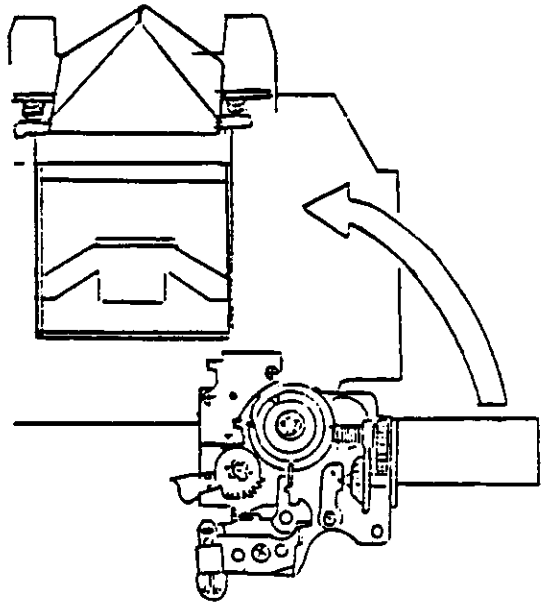

- Engagement of the A8 gear CF0027 and aperture ring ZC6104 is shown in the diagram.

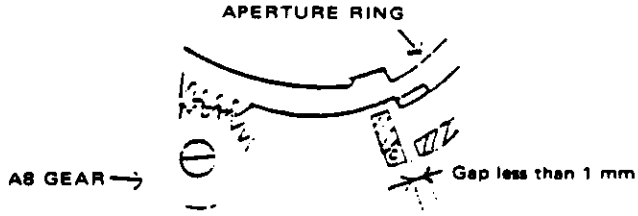

◇ Torque check of aperture ring

- Use a finger to rotate the A3 gear (CF0019) and raise the mirror upward.
- Reverse aperture ring from the smallest lens opening position.
- Using a tension gauge (200g), measure the follow tension of rotating to the smallest lens opening position. It should be between 95 ~ 110g.
- If not, change the number of rotation (4 times) of aperture spring.

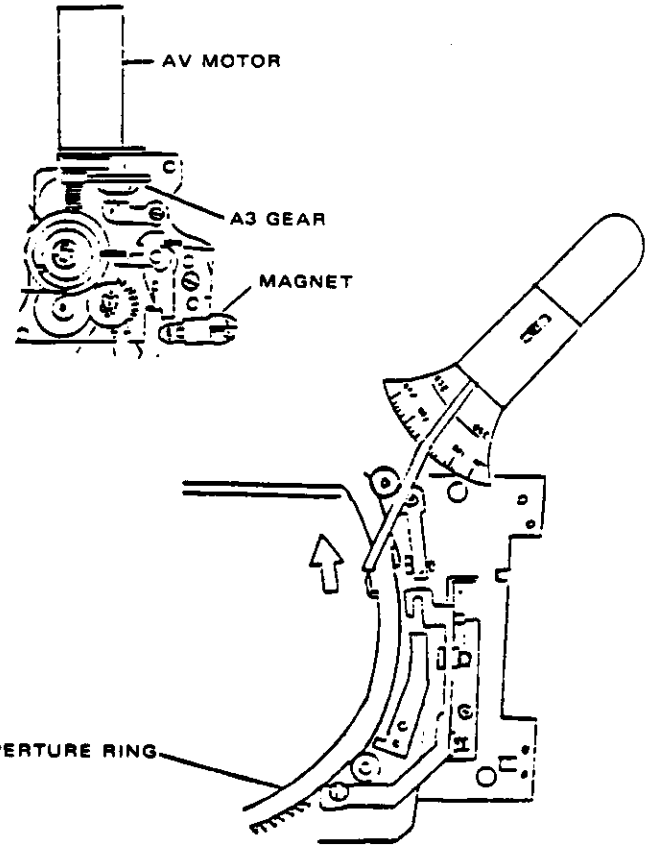

5. **Coupling**

- Front plate ass'y: Rotate the A3 gear and raise the mirror.
- Main body: Place W stopper just in front of the big gap in the 4 cam gear. HS lever must be pushed to the cam of the 4 cam gear.
- (position the Ⓐ part of the W stopper and the HS lever close to the rail surface)
- Tighten the 7 screws as indicated in the diagram. Take care to use the correct screws.

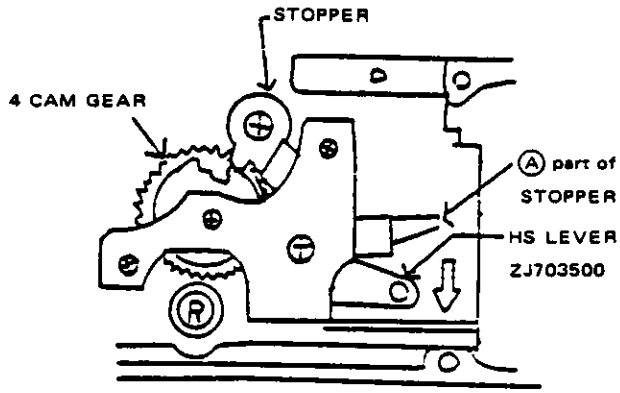

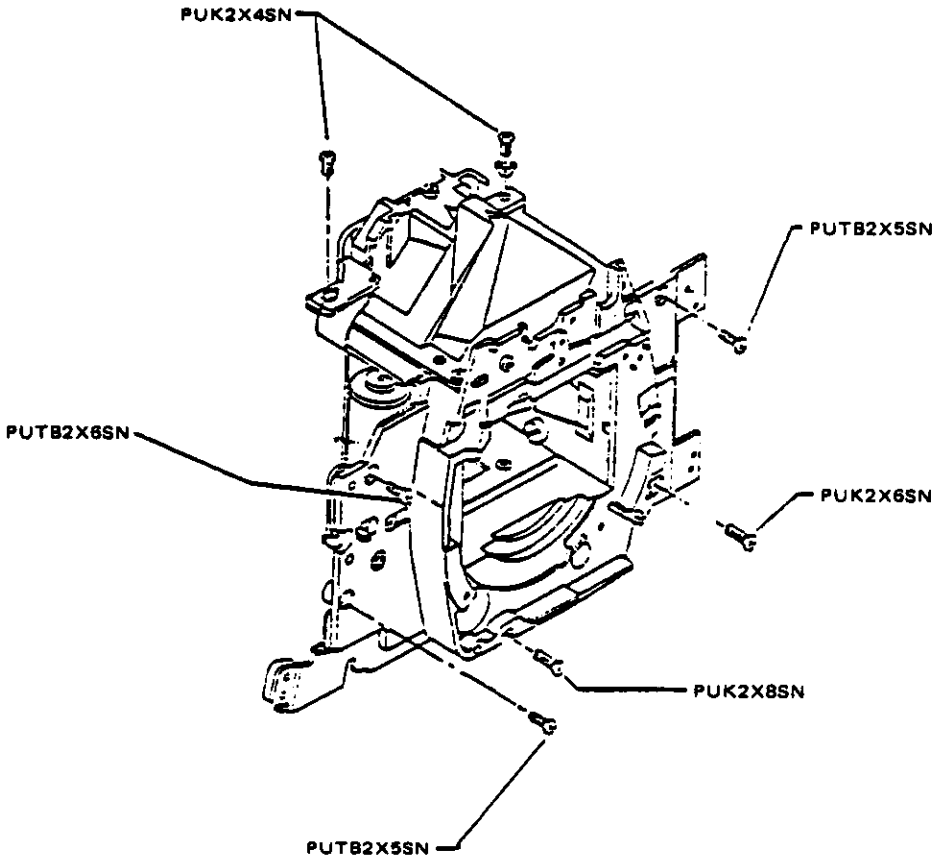

2. EFFICIENCY ADJUSTMENT

1. Adjustment of Viewfinder Focusing

1. Correction of partial-out-of-focus condition.
   Detach the screen and set the jig mirror KC0166 in position.
   Re-attach and adjust the front plate to correct for the partial-out-of-focus condition.
   - ◇ Correction in the Y direction
     Move the 45° adjust screw slightly and adjust the standard to 0±10'
   - ◇ Adjust the standard in the X direction to 0±12'
     (The standard is set in each part, so there is no way to adjust.)

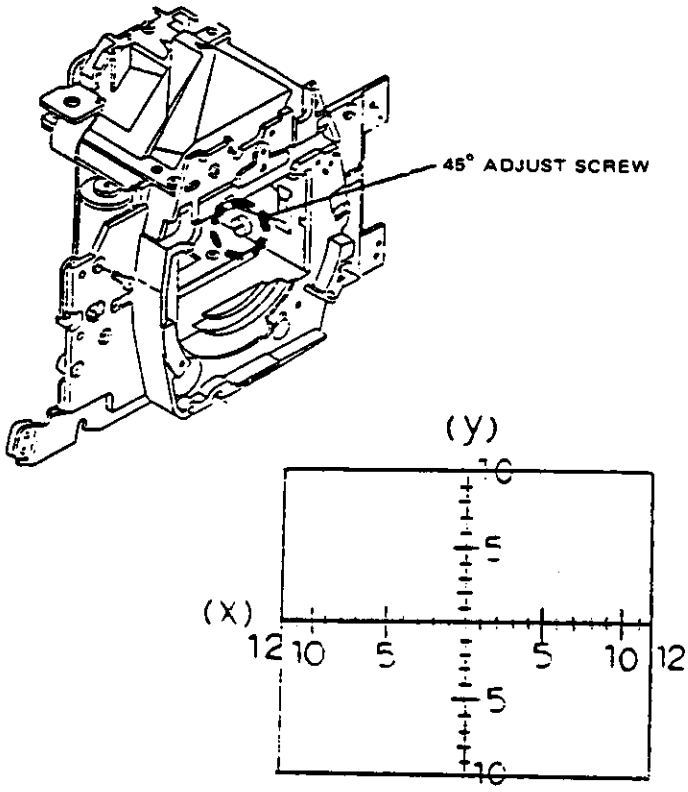

2. Positional adjustment of Fresnel lens (adjustment of F focal point)
   Detach the screen and set the jig mirror KC0166 in position
   - ◇ Attach the camera to a photo-electric collimator and read the peak value of the pointer.
     The reading should be 46.00 ± 0.02 mm (when using the jig mirror)
   - ◇ Adjustment of the focal point
     Measure the upper frame of the prism unit ZJ7026 with a dial gauge (attached to the collimator)
     Check 4 points
     If aberration value is minus, turn the focusing shaft CF0184 while reading the dial gauge and raise the 4 points so that they are in balance.
     In the event that the aberration is positive, lower the 4 points (move the prism frame in a parallel fashion).
     After adjusting, recheck the adjustment.

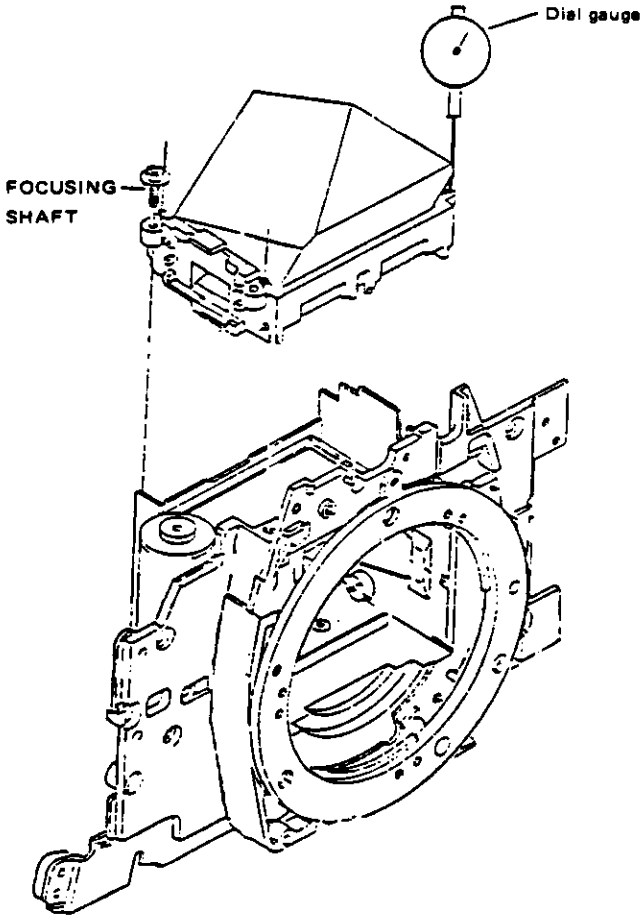

2. Viewfinder Information and EE Adjustment (when adjusting EE, use a vertically-moving EE mask)

2-1. Auto-adjustment

Prerequisite

- System checker T-2, EE tester set to the BV11 range, F5.6 jig lens
- Detach front cover ZC6130 and set the double-function switch as shown in the diagram. CHK ⟷ GND TST ⟷ MEMO turns ON/OFF at the same time.
- Since the front cover is detached, cover the camera with a piece of black cloth to prevent the camera from being effected by light.
  * The double-function switch must be the camera.
  Connect the camera's GND to the − terminal of the power grip or to the lower right terminal of the AF circuit board.

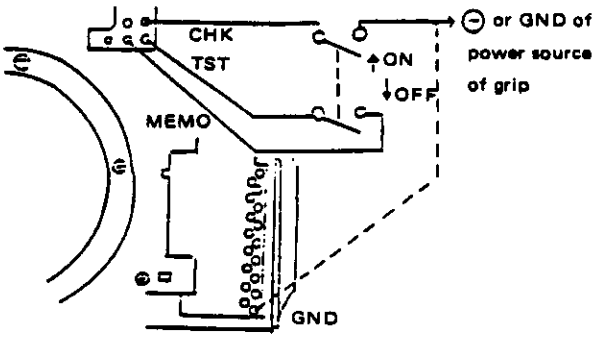

1. Mount the F5.6 jig lens to the camera, and connect the system to EE tester.
   Set the EE tester to BV11 and ISO100.
   Set the shoe terminal of T-2 to "accessory shoe".
2. Set the power of the DC stabilizer to 6.2V and connect it to the grip jig, Turn on the power of camera. If EP is shown on the LCD, turn off the power to the camera and turn it on again while the double-function switch is left ON.
3. Turn on the double-function switch.
   Operate T-2. (for details, refer to T-2 manual).

	Operation	Display	Remarks
1	Turn on the E button of the main mode (ET ON)	BV/BC AUT AJD	
2	Turn on the AUTO (RS232C) Switch	EV CHECK EE AUTO DX *	After the auto-adjustment of the display level, enters EE auto-adjustment mode
3	Release shutter several times	EE AUTO DX *	After several release, EE of ISO100 changes to ±0.125EV

When the EE adjustment is carried out (ISO100), other ISO's are automatically adjusted compared to the standardized ISO100.
Refer to the T-2 manual for information about EE adjustment of each ISO or specific ISO.

Reassembling and adjusting standards

BV4	$0^{+0.2}_{-0.5}$ EV
BV7	0 ± 0.3 EV
BV11	0 ± 0.2 EV
BV12	0 ± 0.5 EV

F5.6 jig lens ISO100

- After adjustment, remove the jig from the camera, and check the display again for EE accuracy.

T-2 adjustment mode timer

- When the camera is in the adjustment mode, a bar is displayed on the LCD.

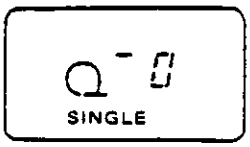

- If the shutter is not released within 30 seconds, the camera escapes from the adjustment mode. (The bar disappears) (The adjustment mode will be renewed for more 30 seconds if the shutter is released while in the adjustment mode)
- When the adjustment mode is off, turn the double-function switch ON again.

4. Adjust viewfinder indication and EE whenever M circuit board or DX circuit board is replaced. Set power voltage to 6.2V for automatic B.C. adjustment.

2-2. Manual Adjustment (without BV11 of the EE tester, T-2 is not used)

○ Preparations

- DC stabilizer
- F5.6 jig lens or AS5018
- Grip jig
- Set the double-function switch as shown in the diagram

  CHE ↔ GND TST ↔ MEMOR turns ON/OFF at the same time

  * The double-function switch must be OFF when power is first supplied to the camera.

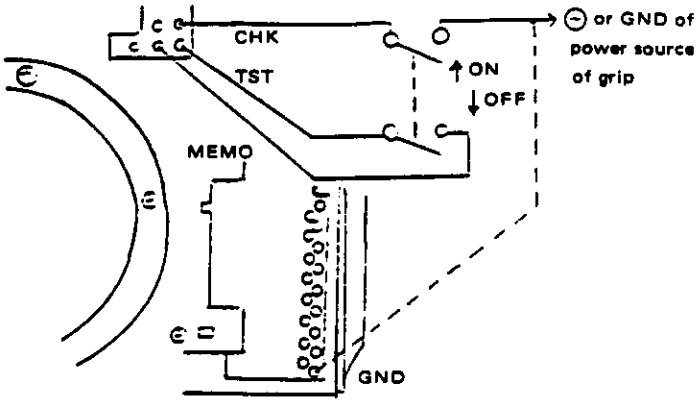

- Apply 6.2V to the DC stabilizer and connect it to the grip jig.

  If EP is shown on the LCD, turn the power to the camera OFF and ON again while the double-function switch is left ON.
- Turn on the double-function switch.
- Since the front cover is detached, cover the camera with a piece of black cloth to prevent the camera from being effected by light.

1. Manual adjustment of the display ··· using light box.
   - Set the brightness to BV11 or to the nearest brightness when there is no BV11.
   - Adjust only when M circuit board or DX circuit board is replaced.

     Battery check, auto-adjustment of M circuit board: Press the self-timer button twice and release the shutter.

     (When M circuit board or DX circuit board is not replaced, the grip adjustment is not neccessary. 62V is not necessary either.)
   - While holding the AE lock button, set the shutter speed indication according to the table below by turning the shift knob up or down. (Brightness must be fixed to any one of the values.)
   - Release the shutter after adjustment (By releasing, data is updated.)

	AS 5018 Shutter indication	F 5.6 jig lens shutter indication
BV9	90	15
BV10	125	30
BV11	180	60
BV12	250	125
BV13	350	250

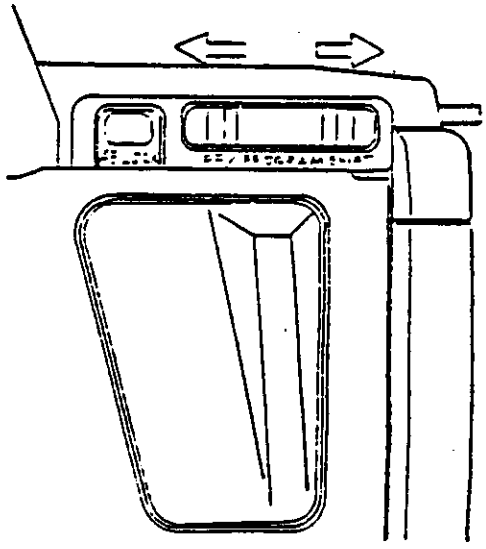

2. EE Manual adjustment

Set the camera to the EE tester. (Set ISO100 and BV value in the range of BV11.)

- Release the shutter and then read the EV value.
- If the value deviates from the standard, adjust the EV value by turning shift knob up or down while holding the release button.

Assembly adjustment standard

BV4	$0^{+0.2}_{-0.5}$ EV
BV7	0 ± 0.3 EV
BV11	0 ± 0.2 EV
BV15	0 ± 0.5 EV

F5.6 jig lens ISO100

When shift knob is turned up: EV value increase by 0.125.
When shift knob is turned down: EV value decreases by 0.125.

- Turn off the double-function switch after adjustment.
  After removing the jig from the camera, check the display and EE accuracy a gain.
  * For EE adjustment of each ISO value, use T-2 to set ISO value.

3. Necessary adjustment items when circuit board is replaced.

Circuit board	Adjustment items and procedures
M circuit board	1. B.C. adjustment 2. Display adjustment 3. EE adjustment
DX circuit board (E^2 PROM)	1. B.C. adjustment 2. Display adjustment 3. EE adjustment

- After B.C adjustment, readjust display and EE, because, the adjustment data of display and EE are erased during B.C adjustment.

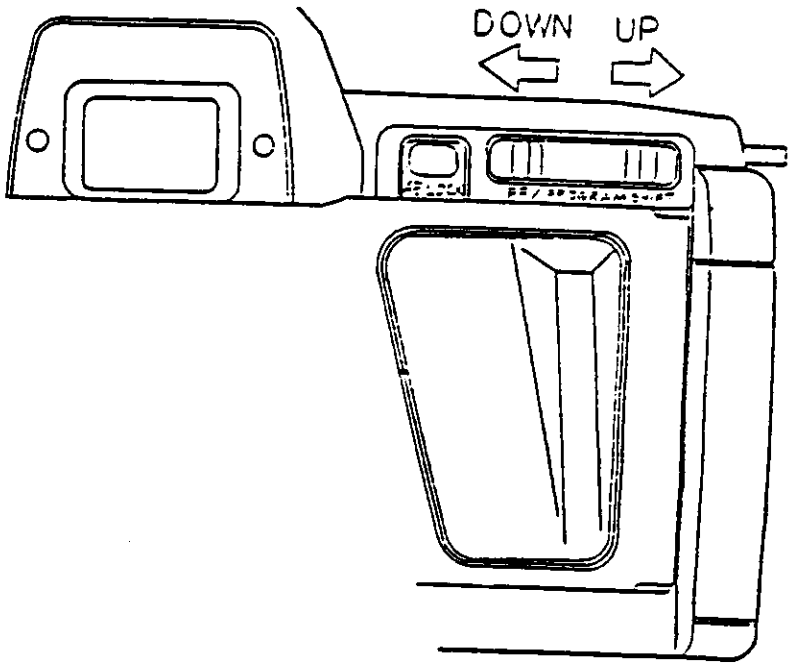

3. Adjustment of Shutter Ass'y

When the shutter ass'y malfunctions occur, do not attempt repair. From the standard points of reliability, durability and cost, it is recommended to replace the entire unit.

Reference

- Adjustment of curtain speed reference value
  7.8 ± 0.2 ms (1/2000 at 20°C)
  Use T-2 and set speed to 1/2000.
  Adjust front curtain and rear curtain by turning each ratchet.

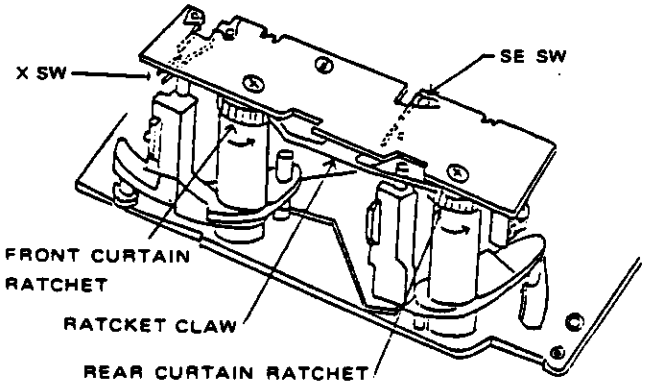

Generally, turn the ratchet counter-clockwise only (curtain speed increase) (Clockwise rotation will cause deformity of the claw or top of the ratchet teeth.)
In case curtain speed must be slowed down, carefully separate the claw from the ratchet and reverse the procedure (clockwise).

* In this adjustment, the shutter speed balance is changed. As a result, uneven exposure will occur. Adjust so as not to influence exposure.

◎ Adjustment standards

1. Change in front curtain speed per ratchet (When curtain speed is approx. 7.9 ms)

Change in front curtain speed	Change in seconds		
	Ach	Bch	Cch
0.04 ms	+0.02 ms	+0.05 m	+0.07 m

- In the case of a vertically-moving shutter (moves upwards from below), set the curtain direction mode of the shutter to for up.

◎ Handling of Shutter Unit

- Hold the shutter unit on both ends. Do not hold the unit from the top or bottom (see diagram).
- Do not blow air directry onto the shutter curtain.
- If the curtain is dirty, wrap a pair of tweezers with finger-stall and wipe slightly in one direction only as shown in the diagram. (If the curtain is wiped strongly, static electricity is produced causing the shutter speed to slow down temporarily. To avoid this, release the shutter three or four times.)

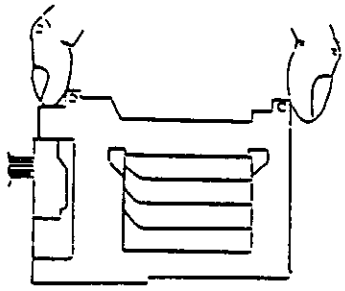

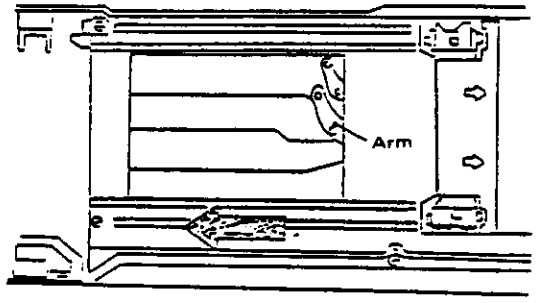

4. X Synchronization Time Lag

Measurement procedure

- Since there is no synchronization socket, use an OM-10 hot-shoe adaptor.
- If the shutter tester is the type with a 35 mm FOCAL ↔ PEN · F LENS exchange mode, set it to PEN · F LENS.
- Set the camera to the F4 mode.
- Standard:
  1. Within 0.3 ms ~ 1 ms (C channel → XSW ON)
  2. For a tester whose C channel is on the border of the mask: within 0 ~ 0.6 ms

Adjustment Procesure

- Adjust the binding of the XSW armature in the shutter unit.

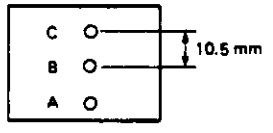

Mask surface of shutter tester

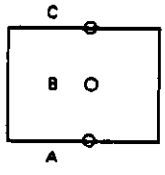

5. AF adjustment

5-1. Adjustment procedure

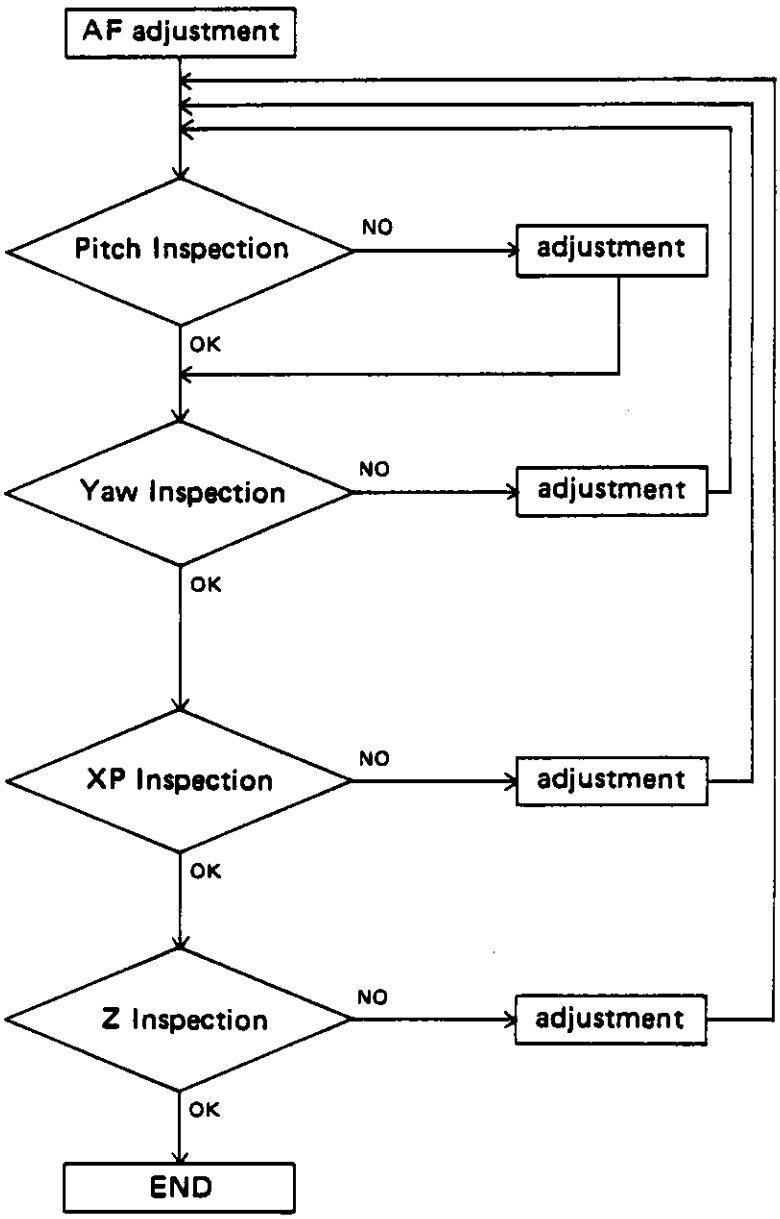

PITCH ····· Forward-backward adjustment
Yaw ····· Left-right adjustment
XP ····· Matching adjustment for columns A and B in the CCD
Z ····· Focal length adjustment

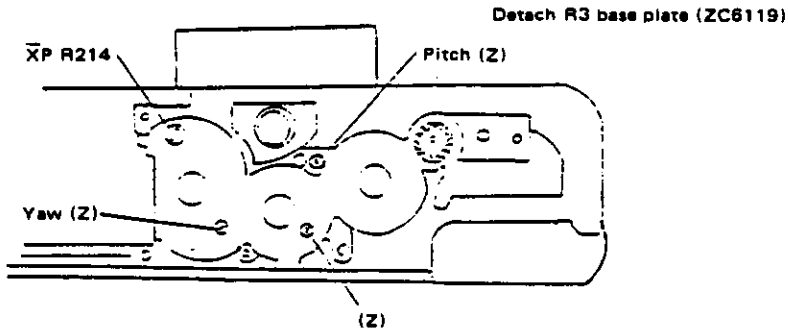

5-2. Pitch Adjustment

1. Set camera to T-2
   - Solder the 7 lead wires to the AF circuit board.
   - Insert the jig into the shoe.
2. Adjust the light box to BV10, and move the FD adjustment jig (KC0139) to face the light box.
3. Change the shape of the FD adjustment plate jig (KC0139) into a semi-circular one.
4. Operate T-2

↓	Main mode key	S (AF CHK)	ON
↓	"	ET	ON
↓	Sub mode key	D	ON
↓	Main mode key	ET	ON

↓ Turn on AE Lock key twice

↓ Read T-2 display (CCD accumulated time)

5. Slide the FD adjustment plate jig (KC0139) to reverse the semi-circle. Then read the T-2 display. The difference in the accumulated time when plate is exchanged should be within +3% ± 5% (Repair and adjustment standard).
6. If the value does not meet the standard, adjust by turning the sensor screw for Pitch adjustment.

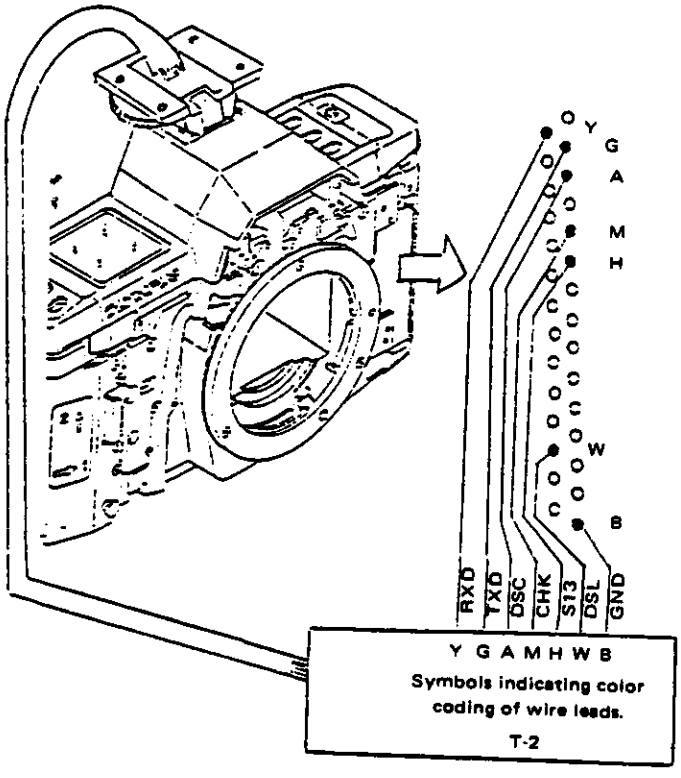

e.g.

P1 = 4.86 ms	P2 = 5.215 ms
4.86 x 0.03 = 0.146	4.86 + 0.146 = 5.006 ms
5.006 x 0.05 = 0.25	5.256 ~ 4.756 ms . . .
	. . . standard

∴ The standard is satisfied when P2 = 5.215 ms.

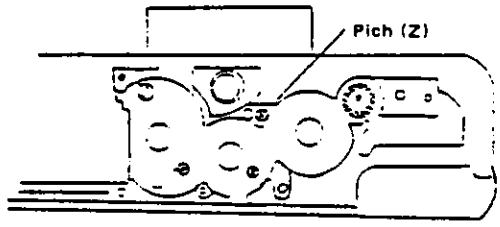

5-3. Yaw Adjustment

1. Set T-2 and light box to the same values as in Pitch adjustment.
2. Attach the Yaw adjustment jig (KC0167) to the camera.
3. Operate T-3

↓	Main mode key	S (AF CHK)	ON
↓	"	ET	ON
↓	Sub mode key	C	ON
↓	Main mode key	ET	ON

↓ Turn on AE Lock key twice.

↓ Read T-2 display (the area difference between columns A and B in the CCD).

4. The area difference should be within ±5%.
5. If the area difference is greater than ±5%, adjust by turning the sensor screw to satisfy the standard.
   - Do not use the Yaw slit of the FD adjustment jig (KC0139) in Yaw adjustment because high accuracy cannot be obtained.

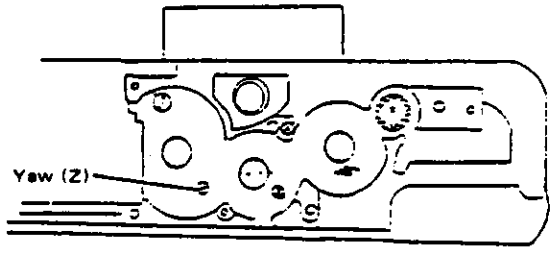

5-4. XP Adjustment

1. The setting of T-2 is the same as that for the Pitch and Yaw.
2. Turn the coupler of the jig lens AS5018 and stop at 1.2 m (scribed line). Attach to camera in the position where the camera is just locked. (do not engage with coupler near body.)
3. Using a piece of white paper on the wall, set the camera to a distance of 1.2 m. (Set brightness of the white paper to BV10.)
4. Operate T-2

↓	Main mode key	S (AF CHK)	ON
↓	"	ET	ON
↓	Sub mode key	F	ON
↓	Main mode key	ET	ON

↓ Turn on AE Lock of camera twice.

↓ Read T-2 display (Matching difference between columns A and B in the CCD).

5. Indication of T-2 must be
   within 0.5% average
   within 1% maximum
6. If values are less than the standard, adjust by turning variable resistor R 214.

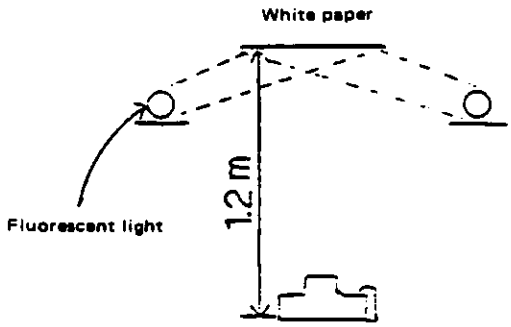

Be sure to use Fluorescent light.
Take care not to let direct Fluorescent light enter the camera.

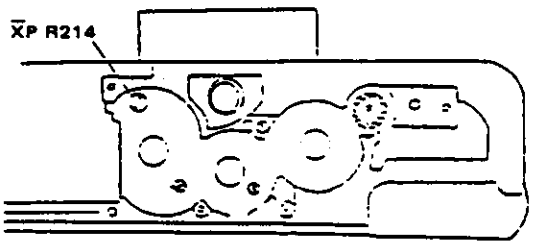

5-5. Z Adjustment

1. Hang the designated pattern on the wall and set the brightness of the pattern to BV10 (using a fluorescent light).
2. Mount the AS5018 jig lens to camera.
3. Set the camera at a distance of 1.154 mm from the pattern.
4. Press the release button and measure the distance.
5. Position the scribing on the focusing ring at 1.2 m. The lens index should now satisfy the standard. Distance between the scribed line and lens index must be within 1 mm (left-to-right) (Check by releasing the shutter two ro three times.)

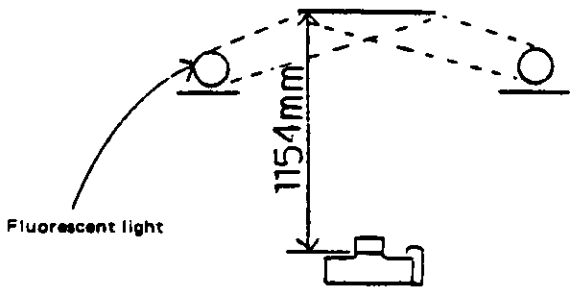

Do not shine fluorescent light directly on the camera.
Be sure to use fluorescent light.

6. If the values are less than the standard, adjust by turning the three sensor screws evenly.

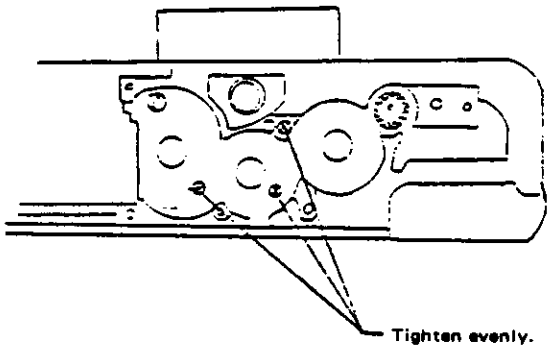

E

REPAIR PROCEDURES

E. REPAIR PROCEDURES

CONTENTS

1. SYSTEM CHECK T-2 MANUAL

1. Panel

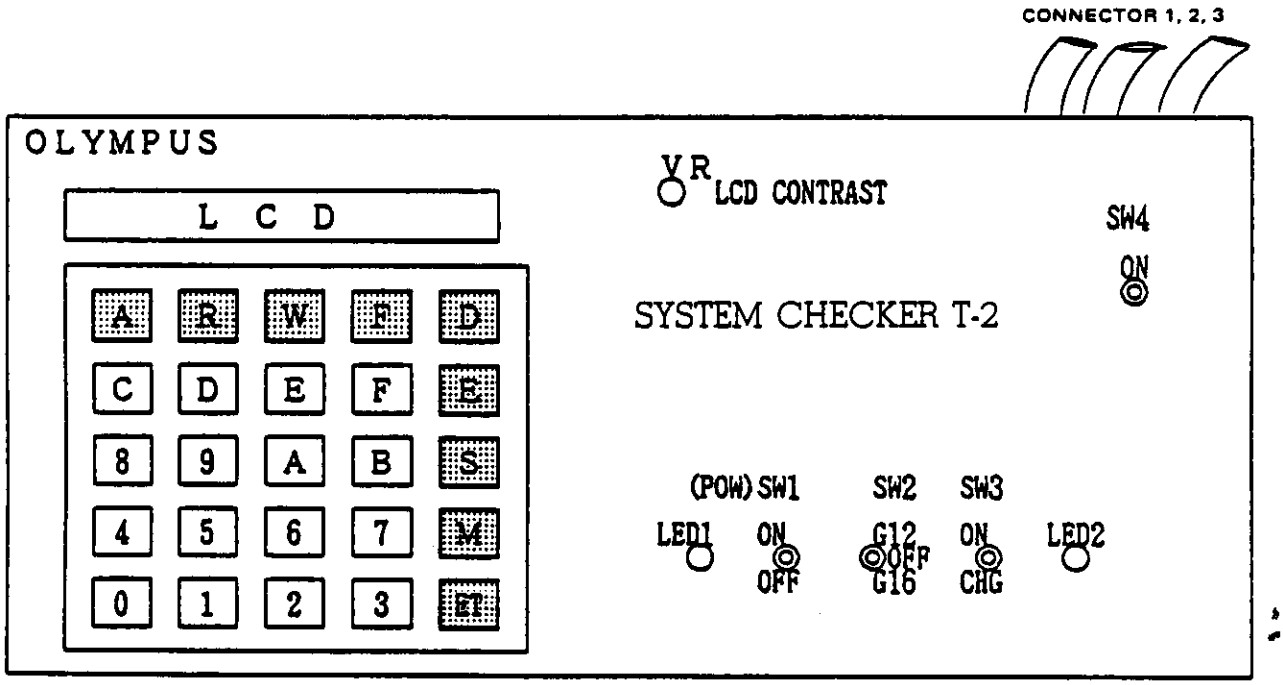

1. LCD ..... DOT MATRIX DISPLAY
2. VR ..... LCD contrast adjustment resistor (adjusts brightness to obtain clear display on LCD).
3. SW1 ..... POWER SW
4. SW2 ..... GRIP flash recharged signal (Choose G12 or G16. There is presently no G16.)
5. SW3 ..... T series flash ON/recharged signal
6. SW4 ..... AUTO CHECK mode: auto adjustment
   AF SENSOR CHECK mode: CHECK T-2 line ON
   EE/BV ADJUST mode: auto adjustment
7. LED1 ..... Lights when SW1 is ON
8. LED2 ..... Built-in F280 flash, illuminator LED dummy
9. MAN MODE ..... main mode selection key
   use Letters A, R, W, F, D, E, S, M, ET
10. TEN KEY ..... sub-mode selection key: for address/data input, use keys other than the main keys (0, 1, 2, ... A, B, C, D, E, F)

2. Table of Check Items

◇ When using Checker T-2 to check these items, use the following procedures to call the appropriate programs.

1. Main mode (main items) → 2. Sub-mode (sub-items) · · · (display)

◇ There are 3 kinds of connectors on the camera
1. Connector 1: For connecting the AF checker
2. Connector 2: For connecting the GRIP
3. Connector 3: For connecting shoe

◇ Table of check items

1. Use connector 3 (Shoe connector)

Main mode	Sub-mode	Display	Check item
	0	D-CONNECT CHECK	DXSW
A (AUTO MODE)	1	S-CONNECT CHECK	Lens RCM data
	9	LCD ON CHECK	LCD full on
	A	STANDBY CHECK	Display time (30 sec.)
	B	MECHA SW CHECK	each SW mechanism
	C	KEY SW CHECK	each SW key
	D	SHOE X/T CHECK	XSW, TTL Signal
	E	SEQ SW CHECK	SE, MU, WU, AVSW
R (RAM READ)	020	ADR : 020 DATA : OO	SW value (ISO)
	022	ADR : 022 DATA : OO	EV value
	02C	ADR : 02C DATA : OO	AV value (for display)
	02E	ADR : 02E DATA : OO	TV value (for display)
	036	ADR : 036 DATA : OO	BV A/D exchange value
	032	ADR : 032 DATA : OO	BATT A/D exchange value
	034	ADR : 034 DATA : OO	TV value (P line, turning point)
	03A	ADR : 03A DATA : OO	Number of aperture step
	03E	ADR : 03E DATA : OO	TV value when AELOCK
	056	ADR : 056 DATA : OO	focus length
	05A	ADR : 05A DATA : OO	Minimum F No.
	05C	ADR : 05C DATA : OO	Release F No.
	13C	ADR : 13C DATA : OO	film counter
	13E	ADR : 13E DATA : OO	DX code
F (F280)	0	F280 ON *	F280. X signal
	1	F280 CHARGE UP *	F280. X, EP signal

Main mode	Sub-mode	Display	Chek item	
E (EE/BC ADJ)	—	BV/BC AUTO ADJ	EE adjustment	
	—	BV/BC AUTO ADJ	EE adjustment	
	—	EV CHECK	EE adjustment	
	8 ⋮ F	ISO SET 25 ⋮ ⋮ ⋮ ISO SET 3200		
	1	EV CHECK	Check EV value	
M (MANUAL MODE)	0	DAV: PRG SS: BULB	Check program aperture	
	1	DAV: PRG SS: BULB	Check program aperture	
	2	DAV: 0.0 SS: AUTO	Check EE value	
	3	DAV: 0.5 SS: 2	aperture 0.5 step	SS 2
	4	DAV: 1 SS: 1	aperture 1 step	SS 1
	5	DAV: 1.5 SS	aperture 1.5 step	SS 2
	6	DAV: SS: 4	aperture 2 step	SS 4
	7	DAV: 2.5 SS:	aperture 2.5 step	SS 8
	8	DAV: 3 SS: 15	aperture 3 step	SS 15
	9	DAV: 3.5 SS: 30	aperture 3.5 step	SS 30
	A	DAV: 4 SS: 60	aperture 4 step	SS 60
	B	DAV: 4.5 SS: 125	aperture 4.5 step	SS 125
	C	DAV: 5 SS: 250	aperture 5 step	SS 250
	D	DAV: 5.5 SS: 500	aperture 5.5 step	SS 500
	E	DAV: 6 SS: 1000	aperture 6 step	SS 1000
	F	DAV: 6.5 SS: 2000	aperture 6.5 step	SS 2000

2. Use connectors 2 and 3 together

Main mode	Sub-mode	Display	Chek item
A (AUTO MODE)	2	B-CONNECT CHECK	DISP-SW, RESW, GRIP FLASH
	3	F-CONNECT CHECK	SLMP signal, absolute distance value
	4	T-CONNECT CHECK	Shoe, X terminal
	5	F-CONNECT CHECK	GRIP FLASH
	7	AV/TV CHECK	Operation of Camera
	8	SHOE TTL CHECK	X, TTL of shoe

3. Use connector 1 and 3 together

Main mode	Sub-mode	Display 1	Display 2	Check item
S (AF SEMDCR)	0	MLIFE	——	Lens rotation
	1	TADOR	——	Actuation of 200 pulses
	2	LENS RUN	+00B5 78 044C 01	Lens coefficient
	3	TAFSEQ (F4.0)	——	
	4	TAFSEQ (F2.8)	——	
	5	TAESIN (F2.8)	——	
	6	TPOWER	——	
	7	PWRUP	——	
	8	CCDYAW (F4.0)	OFC9 ODD9 +15.89%	Yaw
	9	DISPIT (F4.0)	DISPIT 10.455 ms	Pitch
	A	CCDZ (F4.0)	1+01289	F focus
	B	XBPADJ (F4.0)	ODE1 OCBE +10.5%	A, B output
	C	CCDYAW (F2.8)		Yaw
	D	DISPIT (F2.8)		Pitch
	E	CCDZ (F2.8)		F focus
	F	XBPADJ (F2.8)		A, B output

3. Operating Procedure

1. [POW-SW-ON] (camera) → 2. [SW1-ON] → 3. [Main mode] → 4. [ET] → 5. [Sub-mode] → 6. [ET]

Notes: 1. Turn OFF all other SW's.
2. Turn the camera ON and then turn ON SW1 of the checker.
3. To check the re-display of the sub-mode and OK function, press the reset button on the camera and then press ET.
4. To change the main mode; press the reset button on the camera and then set main or sub-mode.
5. If changing the main mode fails, repeat above procedures from (1) again.

Auto-Adjustment Function

◎ If SW4 is turned ON during AUTO-CHECK;

- Checking automatically advances from D-Connect → S-Connect → · · · LCD ON.
  However, if any part malfunctions, it will be indicated on the display.
- When SW4 is turned OFF, Auto-adjustment returns to D-Connect check and starts again when SW4 is turned ON again.

4. Practical Example in using Checker

4-1. Use of Connector 3 (SHOE)

4-1-1. AUTO CHECK MODE

Operation: POW-ON → SW1-ON → A → ET → O → ET → (display)
(Camera)

main mode
sub mode

1. D-CONNECT CHECK = DX contact check (A. 0)

Display

O: OK F: Failure

Film-unloaded	O	D-CONNECT OK	OK displayed briefly
	F	DX1 OFF	contact 2 failure
Film-loaded	O	DX1 2 OFF	according to ASA100 DX code table
	F	Out of DX code table	

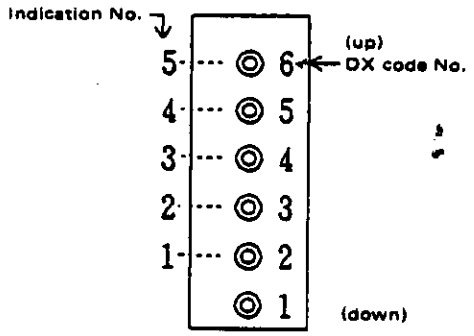

2. S-CONNECT CHECK = lens ROM check (A. 1)

Display

O	S-CONNECT OK	OK displayed briefly
F	S-CONNECT ERROR	lens ROM calling failure

3. LCD ON CHECK = LCD fully ON (A. 9)

Display

O	LCD OK CHECK	LCD on the camera all OK, AF inside F OFF
F	LCD ON CHECK	all OFF

4. STANDBY CHECK = check within 30 sec. of display (A. A)

Display

O	STANDBY CHECK	blinks for 30 sec. and stops (F ON → OFF)
F	STANDBY CHECK	failure if operation other than described above

After checking operation, press the reset button on the camera. The film cartridge mark displayed in the LCD should blink and then stop after 30 sec. (OK if LCD inside F turns ON and OFF)

5. MECHA SW CHECK = each SW check (A. B)

Display

Camera Operation	SW Check	Display (O)	Display (F)
Press release button halfway	DSIP-SW	MECHA SW:: DS	With the original SW display (Newly set SW is not displayed)
Press release button	RESW	MECHA SW : RL	
Rear cover open/close	OCSW	MECHA SW : OC	
Film transport	WFSW	MECHA SW : WF	
Attach and remove lens	BMSW	MECHA SW : BM	
R button set	RWSW	MECHA SW : RW	
Press each key	each key	MECHA SW : REY	→KEY CHECK

◇ 1. When checking KEY SW's, slightly press DISPSW and then press KEY SW.

6. KEY SW CHECK = Key SW check (A. C)

Display

KEY SW operation	SW Check	Display (O)	Display (F)
RESET	CLR SW	KEY SW : CLR	With the original SW display.
DRV	DRV SW	KEY SW : DRV	
F4	X/F4 SW	KEY SW : XF4	
AF power	PF SW	KEY SW : FCS	
Self timer	SLF SW	KEY SW : SLF	
Shift left-right	SFTHSW	KEY SW : SHS	
Shift middle right	SFTUSW	KEY SW : SUP	
Shift middle left	SFTDSW	KEY SW : SDN	
AE lock button	AEL SW	KEY SW : AEL	

7. SHOE X/T CHECK = X. TTL-ON Check (A. D)

Display

Condition	Display (O)	Display (F)
Dark	X ON TTL	Failure if display other than as listed on the left.
Low light	X ON-1 TTL ON-2	
Medium light	X ON-2 TTL ON-1	
High light	X TTL ON	

◇ Release shutter

8. SEQ SW CHECK = SESW, MUSW, WUSW, AVSW display static condition (A. E)

Display

SEO MUO WUO AVX	Display: Normal O, Abnormal X

4-1-2. RAM READ MODE sub-mode

Operation: POW-ON → SW1-ON → R → ET → OOO → ET → (Display)

◇ Refer to the table in No. E-7 for each standard value.

1. ISO Check (R. 020)

Display

O	ADR : 020	DATA : 28	Same as ISO of the camera
F	ADR : 020	DATA	Differs from ISO of the camera

2. EV Check (R. 022)

Display

O	ADR : 022	DATA :	Change in response to brightness
F	ADR : 022	DATA :	Differs from ambient brightness

3. AV Check (Display use) (R. 02C)

Display

O	ADR : 02C	DATA :	Same as F display
F	ADR : 02C	DATA :	Differs greatly from aperture value

4. TV Check (Display use) (R. 02E)

Display

O	ADR : 02E	DATA :	Same as F display
F	ADR : 02E	DATA :	Differs greatly from SS

5. BV A/D exchange value (R. 036)

Display

O	ADR : 036	DATA :	Changes in response to brightness
F	ADR : 036	DATA :	Differs greatly in value

6. BC A/D exchange value (R. 032)

Display

O	ADR 032	DATA :	Changes by battery
F	ADR : 032	DATA :	Differs greatly in value

7. P line graph break point (TV value) (R. 034)

Display

O	ADR : 034	DATA :	Changes in response to brightness
F	ADR : 034	DATA :	

8. Number of aperture (pulses) (R. 03A)

Display

O	ADR : 03A	DATA :	Change in response to brightness
F	ADR : 03A	DATA :	Differs greatly in value

9. AELOCK TIME (R. 03E or 03C)

Display

O	ADR : 03E DATA :	
F	ADR : 03E DATA :	

10. Focal length (R. 056)

Display

O	ADR : DATA :	
F	ADR : DATA :	

11. Minimum F No. (R. 05A)

Display

O	ADR : DATA :	
F	ADR : DATA :	

12. Open F No. (R. 05C)

Display

O	ADR : DATA :	
F	ADR : DATA :	

13. Film counter (R. 13C)

Display

O	ADR : DATA :	
F	ADR : DATA :	

14. DX code (R. 13E)

Display

O	ADR : DATA :	
F	ADR : DATA :	

4-1-3. F-Flash Signal Mode

Operation: POW-ON → SW1 → ON → F → ET → O → ET → (Display)
(Camera)

1. F280 X signal check (F. 0)

O	F280 ON X ON	After shutter is released, X ON is displayed
F	F280 ON	

2. F280 X signal check (F. 1)

Display

O	F280 CHARGE X ON	Release Shutter. Two kinds of display indications
F	F280 CHARGE	

[Display] Dark: X ON display
Bright: FLAT display

4-1-4. EE/BC ADJ MODE

Operation = POW-ON → SW1-ON → E → O → ET → (display)
(Camera)

1. ISO setting (E. 0)

Display

O	ISO SET	Same as ISO of camera
F	ISO SET	Different value

◇ (sub-mode)

8 ····· ISO025 C ····· ISO400
9 ····· ISO050 D ····· ISO800
A ····· ISO100 E ····· ISO 1600
B ····· ISO200 F ····· ISO3200

◇ Use instead of DX jig (patron)
Use when setting ISO of the camera to other than 100.

2. EV check (E. 1)

Display

O	EV CHECK	C	Changes in response to brightness
F	EV CHECK		

4-1-5. MANUAL MODE

Operation = POW-ON → SW1-ON → M → ET → O → ET → (display)
(Camera)

1. Setting of bulb (M. 1)

Display

O	DAV = PRG	SS = BULB	When released, it changes to bulb, program
F	DAV =	SS =	

2. Setting aperture value: seconds setting (M. OOO)

Display

O DAV = 1.5 SS = 4

F DAV = SS =

Sub-mode	2	3	4	5	6	7	8	9	A	B	C	D	E	F
Aperture	0.1	0.5	1	1.5	2	2.5	3	3.5	4	4.5	5	5.5	6	6.5
Seconds	AUTO	2S	1.5	2	5	8	15	30	60	125	250	500	1000	2000

◇ Operation: Aperture setting procedures : After main mode is set, press the desired sub-mode key.
Seconds setting procecures : After aperture is set, press the desired sub-mode key while pressing the 0 key.

POW-ON → SW1-ON → M → ET → O → 0 → O → ET → (display)

aperture setting ← seconds setting

4-2. Use of Connector 2 (GRIP) and Connector 3 (SHOE)

4-2-1. AUTO CHECK MODE

Operation = POW-ON → SW1-ON → A → ET → O → ET → (display)

1. B-CONNECT CHECK
   1. DISPSW, RELS signal check (A. 2)
   2. Grip flash signal check

Display

O	B-CONNECT	OK	Displays OK for a brief moment
F	DSP SW	ERROR	DISP NO SW reading
	REL SW	ERROR	REL NO SW reading
	STOUT (CHG)	ERROR	No G flash recharge ready signal
	STCHG (RDY)	ERROR	G flash recharged signal reading impossible
	GRX (WX)	ERROR	No G flash fire signal

◇ 1 Release shutter
2) Carry out in low brightness

2. F-CONNECT CHECK
   1. AF illuminator ON signal check (A. 3)
   2. Absolute distance calculation check

Display

O	F-CONNECT	OK	Display OK for a brief moment
F	F-CONNECT	SLMP	No shoe illuminator ON signal
	F-CONNECT	ERROR	AF Operation Failure, Absolute distance Calculation Failure

◇ 1) Release shutter
2) Carry out in low brightness

3. T-FLASH CHECK
   1. L terminal signal check (A. 4)
   2. X signal check

Display

O	T-FLASH	OK	Displays OK for a brief moment
F	SHOE L	ERROR	Shoe L signal reading impossible
F	SHOE X	ERROR	No shoe X signal

◇ 1) Release shutter
2) Carry out in low brightness

4. F-FLASH CHECK Shoe X/FLAT signal check (A. 5)

Display

O	F-FLASH	OK	Displays OK for a brief moment
	F-FLASH	X ON	Release shutter
	F-FLASH	FLAT	
F	F-FLASH	ERROR	Neither shoe X nor FLAT

◇ 1) Press E.T. and the shutter is released.
2) Carry out in low brightness
3) Mount lens

5. G-FLASH CHECK G-flash signal check (A. 6)

Display

O	G-FLASH	OK	Displays OK for a brief moment
F	STOUT (CHG)	ERROR	No G-flash recharged ready signal
	STOUT (RDY)	ERROR	G-flash recharged ready reading impossible
	GRX (WX)	ERROR	No G-flash fire signal

1. Release the shutter
2. Check in low brightness

6. AV/TV CHECK aperture, shutter check (A. 7)

Display

O	AV/TV CHECK	Shutter is released 4 times at aperture step 2 (SS1/4)
F	AV/TV CHECK	No operation

◇ Shutter is released 4 times automatically

7. SHOE TTL shoe TTL signal check (A. 8)

Display

O	SHOE TTL	OK	Display OK for a brief moment
F	SHOE TTL	ERROR	No TTL sginal

4-3. Use of Connector 1 (AF) and Connector 2 (SHOE)

4-3-1. AF SENSOR CHECK

Operation: 1. POW-ON → SW1-ON → S → ET → 0 → ET → (display)
2. Lightly press the AE lock button twice (lens operation, data display)

1. MLIFE: lens operational check (S. 0)

Display

O	MLIFE	Lens moves forward and backward
F	MLIFE	Lens does not move

◇ Camera LCE displays (0)

2. TADDR: Operational check of lens at 200 pulses (S. 1)

Display

O	TADDR	Lens operates at about 200 pulse
F	TADDR	Lens dose not move

◇ Camera LCD displays (1)

3. LANS RUN: Lens ROM check (S. 2)

Display

O	+005B 78 004C 01	Lens ROM contents displayed
F		

◇ Press reset button on the camera → display

+	error value e/- sign
00B5	error value

18	coefficient of zoom
004C	pulse value
01	AF STATUS

4. TAFSEQ (F4): SEQ Check (S. 3) (F.2.8 is S. 4)

Display

O	TAFSEQ (F4.0)	Lens moves
F	TAFSEQ (F4.0)	Lens does not move

◇ Camera LCD displays (3) (4)

5. TAFSIN (F2.8): SIN check (S.5)

Display

O	TAFSIN (F2.8)	Lens move
F	TAFSIN (F2.8)	Lens does not move

◇ Camera LCD displays (%)

6. T POWER: AF power advance check (S.6)

Display

O	T POWER	Set AF shift SW to the left, lens advances
F	T POWER	No movement

◇ Camera LCD (11 → 10)
◇ Reset the lens to ∞ before checking.

7. PWR UP: AF power slow rotation check (S.7)

Display

O	PWR UP	Set AF shift SW to the left: lens advances slowly
F	PWR UP	

Camera LCD displays (7 → 6)
If the lens advances, turn OFF the SW of the checker or the camera POW-SW.
(Otherwise the motor will continue to rotate.)

8. CCDYAW (F4) (S.8) (F2.8 is S.C)

Display

O	OFC9 ODD9 +15.89%	Standard should be satisfied
F	OFC9 ODD9 +15.89%	Below standard

◇ Camera LCD displays (12)
Standard: Within ±5% (The number of the position of 15.89% is below 5)

9. DISPIT (F4) (S.9) (F2.8 is S.D)

Display

O	Dispit 10.455 ms	Standard should be satisfied
F	Dispit 10.455 ms	Below standard

◇ Camera LCD displays (13)
Standard: 5% (less than 5% against number A of the position of 10.455 ms)

10. CCDZ (F4) (S.A) (F2.8 is S.E)

Display

O	- - - - - 1 + 01289	Standard should be satisfied
F	- - - - - 1 + 01289	Below standard

◇ Camera LCD display (14)
Standard: within ±4 (The number of the position of 01289 is below 4)

11. XBPADJ (F4) (S.B) (F2.8 is S.D)

Display

O	ODE1 OCBE +15.50%	Standard should be satisfied
F	ODE1 OCBE +15.50%	Below standard

◇ Camera LCD display (15)
Standard: ±5% (The number of the position of 15.50 is below 5)

4-4. Adjustment

4-4-1. EE adjustment

1. Preparation

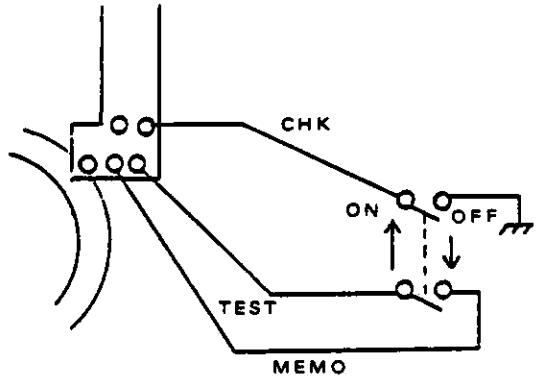

1. Attach the double-function SW to the test terminal.
2. Set the E tester to BV11 and ISO100.
3. Mount a F5.6 jig lens on the camera.
4. Set power of the camera to 6.3V.

Note: Turn double-function SW OFF when power to the camera is turned ON.

- To display (EP) on the camera LCD, turn power OFF and turn ON again while double-function SW is left ON.

2. Operation

1. POW SW-ON → double-function SW-ON → SW1-ON → E → ET → SW4-ON.

(Display) EV CHECK / EE AUTO DX* — After the auto-adjustment of display BC level, Automatically checks display Adjustment level and enters EE auto-adjustment mode.

2. Press release button several times.

(Display) EE AUTO DX* — After release several times, EE of ISO100 changes to ±0.125EV.

Increasing or decreasing the valve of EE is explained below.

3. A key ON. — Set to ISO100.

(Display) ISO SET 100*

4. Press release button.

(Camera shift SW UP/DOWN)

(Display) ISO SET 100 — If the shift knob is turned UP, EE increases. If the shift knob is turned DOWN, S increases.

(Method of setting is explained eblow each IS) (Display)

5.8 ~ F key ON	9 LSO SET*	50	As in 4 above, confirm and adjust each EE of ISO while releasing.
	8 LSO SET*	25	
	A LSO SET*	200	
	C LSO SET*	400	
	D LSO SET*	800	
	E LSO SET*	1600	
	F LSO SET*	3200	

◇ Method of setting ISO

Operation: POW-ON → SW1-ON → E → ET → 0 → ET → (display)

1	EV CHECK		
8	ISO 52	C	ISO 400
9	ISO 50	D	ISO 800
A	ISO 100	E	ISO 1600
B	ISO 200	F	ISO 3200

- To switch ISO continuously, turn ON SW4 and press the 8 ~ F keys.

4-4-2. B, C adjustment · display manual adjustment. EE manual adjustment.
(Do not use T-2 checker)

1. Preparation
   - Same as EE adjustment

	AS5018	F5.6 jig lens		
BV	SS	EV	SS	EV
9	90	98	15	70
10	125	A0	30	78
11	180	A8	60	80
12	250	B0	125	88
13	350	B8	250	90

2. Operation

(1) Double-function SW-ON

(B, C auto-adjustment)

(2) Press the self-timer key on the camera twice.

(Display manual adjustment)

(3) Press the AEL key of the camera and move the shift key UP or DOWN, then set SS inside of F according to the table on the left.
(Set brightness to any of these levels)

(EE manual adjustment)

(4) Move the shift key of the camera UP or DOWN and adjust EE while releasing.
shift UP = EE0.125EV UP
shift DOWN = EE0.125EV DOWN

(5) After adjusting, turn OFF the double-function SW.

RAM ADDRESSS/DATA MAP

ISO (SV)		EV		AV (for display use)		TV (for display use)	
ADDRESS: 020		ADDRESS: 022		ADDRESS: 02C		ADDRESS: 02E	
READ WRITE		READ		READ		READ	
DATA	ISO	DATA	(AF LENS only)	DATA	(AF LENS only)	DATA	(AF LENS only)
18	25	00	Light measuring limit	00	FNO 1.0	48	SS L0
1B	32	08	EV -9	04	1.2	4C	2"
1D	40	10	-8	08	1.4	50	1
20	50	18	-7	0C	1.8	54	1
23	64	20	-6	10	2.0	58	2
25	80	28	-5	14	2.5	5C	3
28	100	30	-4	18	2.8	60	4
2B	125	38	-3	1C	3.5	64	6
2D	160	40	-2	20	4.0	68	8
30	200	48	-1	24	4.5	6C	10
33	250	50	0	28	5.6	70	15
35	320	58	1	2C	6.7	74	20
38	400	60	2	30	8.0	78	30
3B	500	68	3	34	9.5	7C	45
3D	640	70	4	38	11	80	60
40	800	78	5	3C	13	84	90
43	1000	80	6	40	16	88	125
45	1250	88	7	44	19	8C	180
48	1600	90	8	48	22	90	250
4B	2000	98	9	4C	27	94	350
4D	2500	A0	10	50	32	98	500
50	3200	A8	11	54	38	9C	750
		B0	12	58	45	A0	1000
		B8	13			A4	1500
		C0	14			A8	2000
		CC8	15			AC	100
		D0	16				
		D8	17				
		E0	18				
		E8	19				
		F0	20				
		F8	21				

RAM ADDRESSS/DATA MAP

BV A/D converter value		BATTERY A/D converted value		P line graph turning point (TV value)			
ADDRESS: 036		ADDRESS: 032		ADDRESS: 034		ADDRESS:	
READ		READ		READ		READ	
DATA	(AF LENS only)	DATA		DATA	(AF LENS only)	DATA	
00	BV A/D converter failure	00	A/D converter failure	48	2"		
01	Low brightness	01	High voltage	4C	1.5"		
≀	≀	≀	≀	50	1		
FE	High brightness	FE	Low voltage	54	1.5		
FF	BV A/D converter failure	FF	A/D converter failure	58	2		
				5C	3		
				60	4		
	Reference value		Reference value	64	6		
	(with AS5018)	08	6.975V	68	8		
		10	6.75	6C	100		
58	BV 0	18	6.525	70	15		
60	1	20	6.3	74	20		
68	2	28	6.075	78	30		
70	3	30	5.85	7C	45		
78	4	38	5.625	80	60		
80	5	40	5.4	84	90		
88	6	48	5.175	88	125		
90	7	50	4.95	8C	180		
98	8	58	4.725	90	250		
A0	9	60	4.5	94	350		
A8	10	68	4.275	98	500		
B0	11	70	4.05	9C	750		
B8	12	78	3.825	A0	1000		
C0	13	80	3.6	A4	1500		
C8	14	88	3.375	A8	2000		
D0	15						
D8	16						
E0	17						
E8	18						
F0	19						
F8	20						

RAM ADDRESSS/DATA MAP

Number of aperture step (pulses)			Number of aperture step (pulses)						
ADDRESS: 03A			ADDRESS: 03A			ADDRESS:		ADDRESS:	
READ			READ			READ WRITE		READ WRITE	
DATA	Number of step pulses		DATA	Number of step pulses		DATA		DATA	
00	8	64	20	4	32				
01	7 7/8	63	221	3 7/8	31				
02	7 6/8	62	22	3 6/8	30				
03	7 5/8	61	23	3 5/8	29				
04	7 4/8	60	24	3 4/8	28				
05	7 3/8	59	25	3 3/8	27				
06	7 2/8	58	26	3 2/8	26				
07	7 1/8	57	27	3 1/8	25				
08	7	56	28	3	24				
09	6 7/8	55	29	2 7/8	23				
0A	6 6/8	54	2A	2 6/8	22				
0B	6 5/8	53	2B	2 5/8	21				
0C	6 4/8	52	2C	2 4/8	20				
0D	6 3/8	51	22D	2 3/8	19				
0E	6 2/8	50	2E	2 2/8	18				
0F	6 1/8	49	2F	2 1/8	17				
10	6	48	30	2	16				
11	5 7/8	47	31	1 7/8	15				
12	5 6/8	46	32	1 6/8	14				
13	5 5/8	45	33	1 5/8	13				
14	5 4/8	44	34	1 4/8	12				
15	5 3/8	43	35	1 3/8	11				
16	5 2/8	42	36	1 2/8	10				
17	5 1/8	41	37	1 1/8	9				
18	5	40	38	1	8				
19	4 7/8	39	39	7/8	7				
1A	4 6/8	38	3A	6/8	6				
1B	4 5/8	37	3B	5/8	5				
1C	4 4/8	36	3C	4/8	4				
1D	4 3/8	35	3D	3/8	3				
1E	4 2/8	34	3E	2/8	2				
1F	4 1/8	33	3F	1/8	1				

RAM ADDRESSS/DATA MAP

AELOCK TIMER			AELOCK TIMER			AELOCK TIMER					
ADDRESS: 03E, 03C			ADDRESS: 03E, 03C			ADDRESS: 03E, 03C			ADDRESS: 03E, 03C		
READ			READ		READ	READ			READ WRITE		
DATA			DATA			DATA			DATA		
03E address	03C address	Shutter speed	03E address	03C address	Shutter speed	03E address	03C address	Shutter speed	03E address	03C address	Shutter speed
3F	FD	0.37 ms	3F	C0	7.81 ms	3C	00	125			
3F	FC	0.49	3F	B0	9.78	3B	00	156			
3F	FB	0.62	3F	A0	11.72	3A	00	187			
3F	FA	0.74	3F	90	13.67	39	00	219			
3F	F9	0.87	3F	80	15.6	38	00	250			
3F	F8	1.00	3F	70	17.6	37	00	281			
3F	F7	1.13	3F	60	19.5	36	00	312			
3F	F6	1.25	3F	50	21.5	35	00	343			
3F	F5	1.38	3F	40	23.4	34	00	376			
3F	F4	1.50	3F	30	25.4	33	00	407			
3F	F3	1.63	3F	20	27.3	32	00	438			
3F	F2	1.75	3F	10	29.3	31	00	470			
3F	F1	1.88	3F	00	31.3	30	00	500			
3F	EF	2.08	3E	E0	35.2	2E	00	563			
3F	ED	2.33	3E	C0	39.1	2C	00	625			
3F	EB	2.58	3E	A0	43.0	2A	00	687			
3F	E9	2.84	3E	80	40.9	28	00	750			
3F	E7	3.06	3E	60	50.8	26	00	812			
3F	E5	3.31	3E	40	54.7	24	00	874			
3F	E3	3.57	3E	20	58.6	22	00	936			
3F	E1	3.82	3E	00	62.5	20	00	1000			
3F	DD	4.28	3D	C0	70.3	1C	00	1125			
3F	DA	4.65	3D	90	76.2	19	00	1219			
3F	D7	5.02	3D	60	82.1	16	00	1313			
3F	D3	5.39	3D	20	88.0	12	00	1407			
3F	CF	5.98	3C	E0	97.0	0E	00	1563			
3F	CB	6.57	3C	A0	106	0A	00	1625			
3F	C6	7.09	3C	50	114	05	00	1890			
3F	C1	7.71	3C	00	125	00	00	2000			

2. TROUBLE SHOOTING

◇ 1. This section contains information on trouble shooting the electrical system only.
2. It is therefore necessary to distinguish between mechanical failures and electrical failures.
3. Use checker T-2 for checking. Refer to the items in 1 for operation.
4. The check item ▒▒▒▒ recording the sub-mode title of the CHECK.
5. ( ) above and below ▒▒▒▒ records the sub-mode title of the CHECK.
6. The number in the O is the pin number of the IC. The followings are abbreviation for the ICs: B1, B2, CP, FC, LD, HI and HS.
Refer to the right side.

Note 1. To comfirm whether something has been repaird or not, turn the POWSW on the camera OFF for several seconds and then turn it ON again.
(The reason is that the program is latched in the failure mode.)
2. Check the IC connectors again.
3. Use checker T-2 to check the system switches.

Abbre-viation	IC name	Abbre-viation	IC name
CP	CPU U101	FC	AFCPU U201
B1	B.P.1, U102	HI	HIM U202
B2	B.P.1, U103	HS	HSM U203
LD	LCDD U104		

1. Nothing operates, including the display and shutter

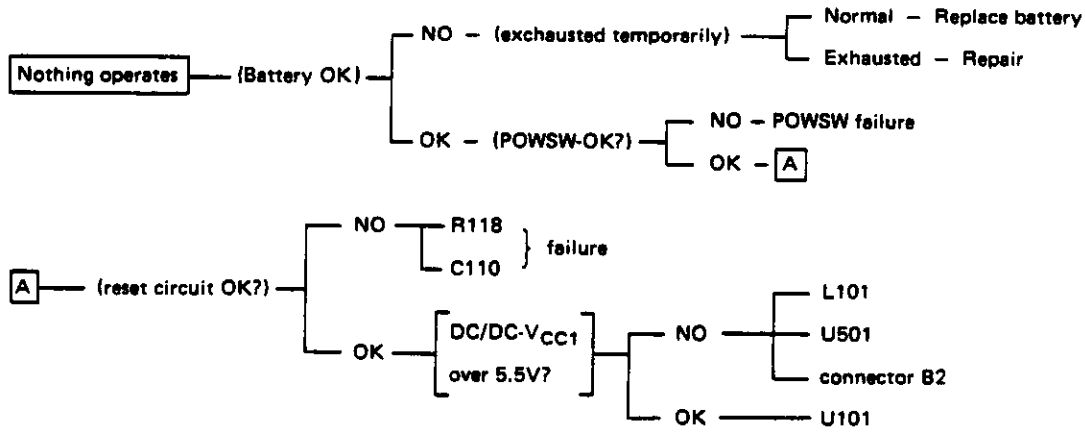

2. Shutter does not move at all

◇ Algorithm for distinguishing breakdown in AF, AF, WD.

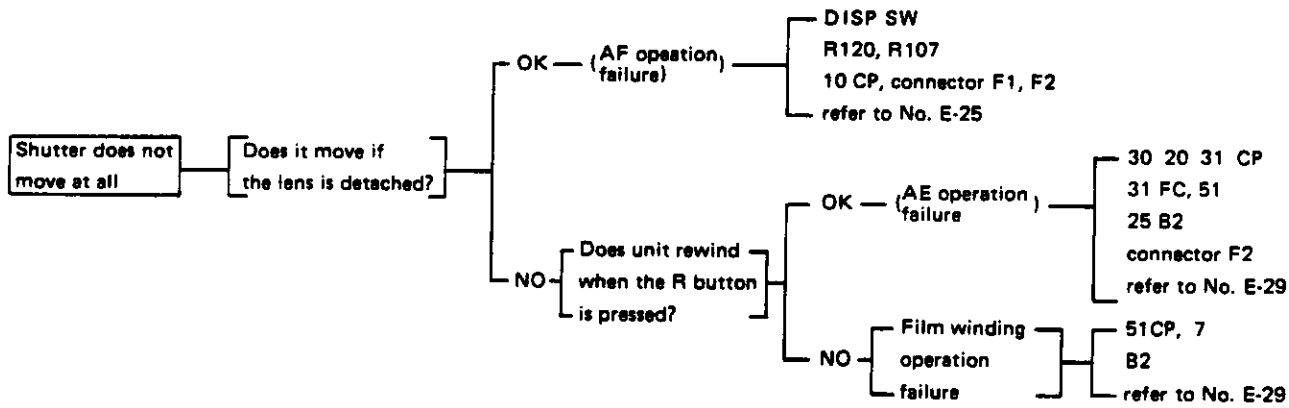

3. Display failure

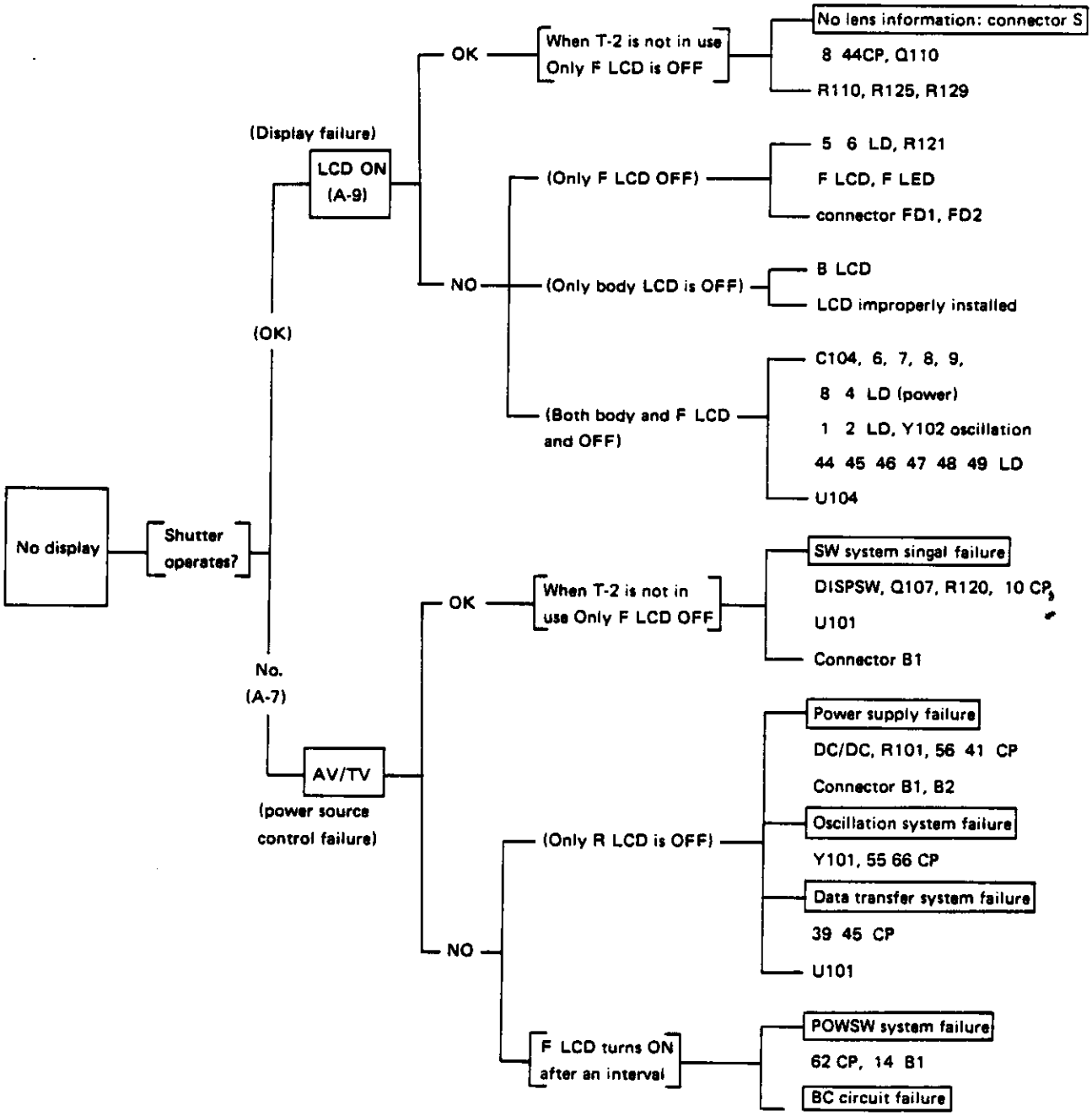

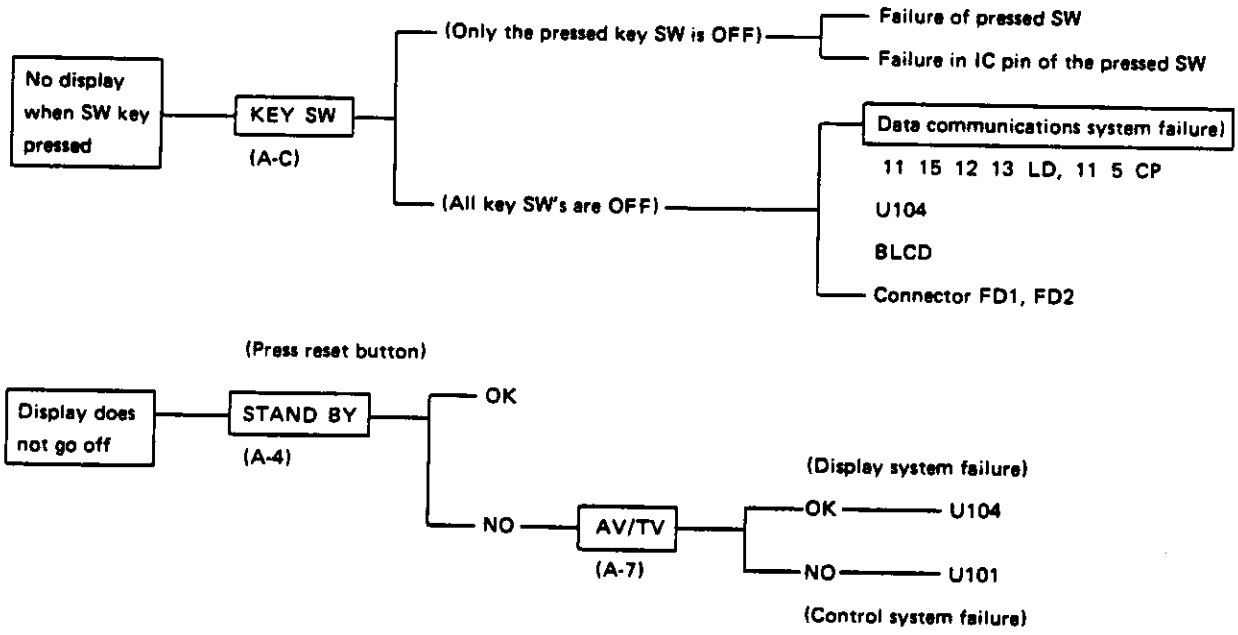

* IC failure if only the display will not go off.

4. AE operation failure

◇ Discrimination

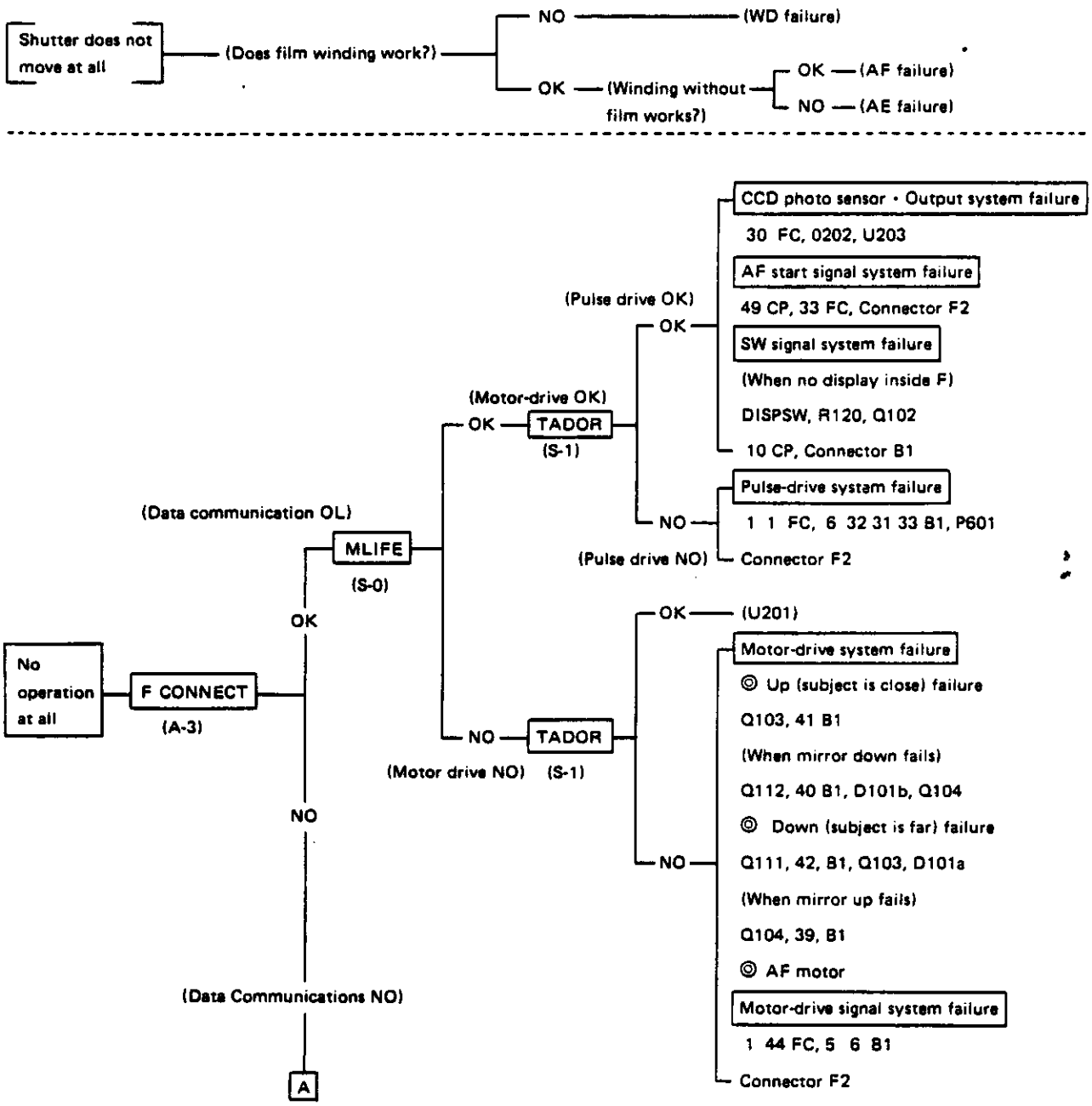

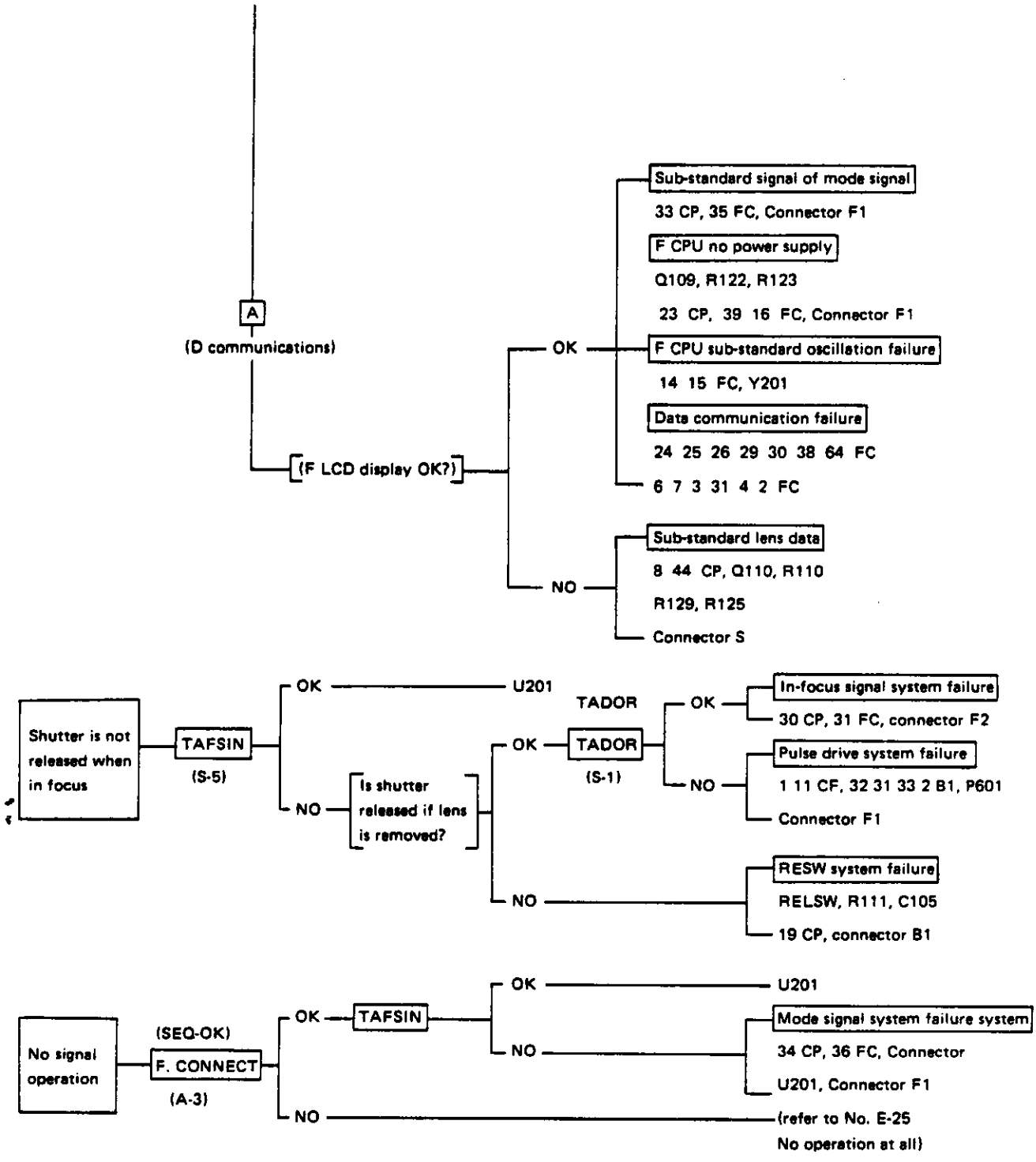
A
(D communications)
(F LCD display OK?)
OK
Sub-standard signal of mode signal
33 CP, 35 FC, Connector F1
F CPU no power supply
Q109, R122, R123
23 CP, 39 16 FC, Connector F1
F CPU sub-standard oscillation failure
14 15 FC, Y201
Data communication failure
24 25 26 29 30 38 64 FC
6 7 3 31 4 2 FC
NO
Sub-standard lens data
8 44 CP, Q110, R110
R129, R125
Connector S
Shutter is not released when in focus
TAFSIN
(S-5)
OK
U201
NO
Is shutter released if lens is removed?
OK
TADOR
(S-1)
TADOR
OK
In-focus signal system failure
30 CP, 31 FC, connector F2
NO
Pulse drive system failure
1 11 CF, 32 31 33 2 B1, P601
Connector F1
NO
RESW system failure
RELSW, R111, C105
19 CP, connector B1
No signal operation
(SEQ-OK)
F. CONNECT
(A-3)
OK
TAFSIN
OK
U201
NO
Mode signal system failure system
34 CP, 36 FC, Connector
U201, Connector F1
NO
(refer to No. E-25
No operation at all)

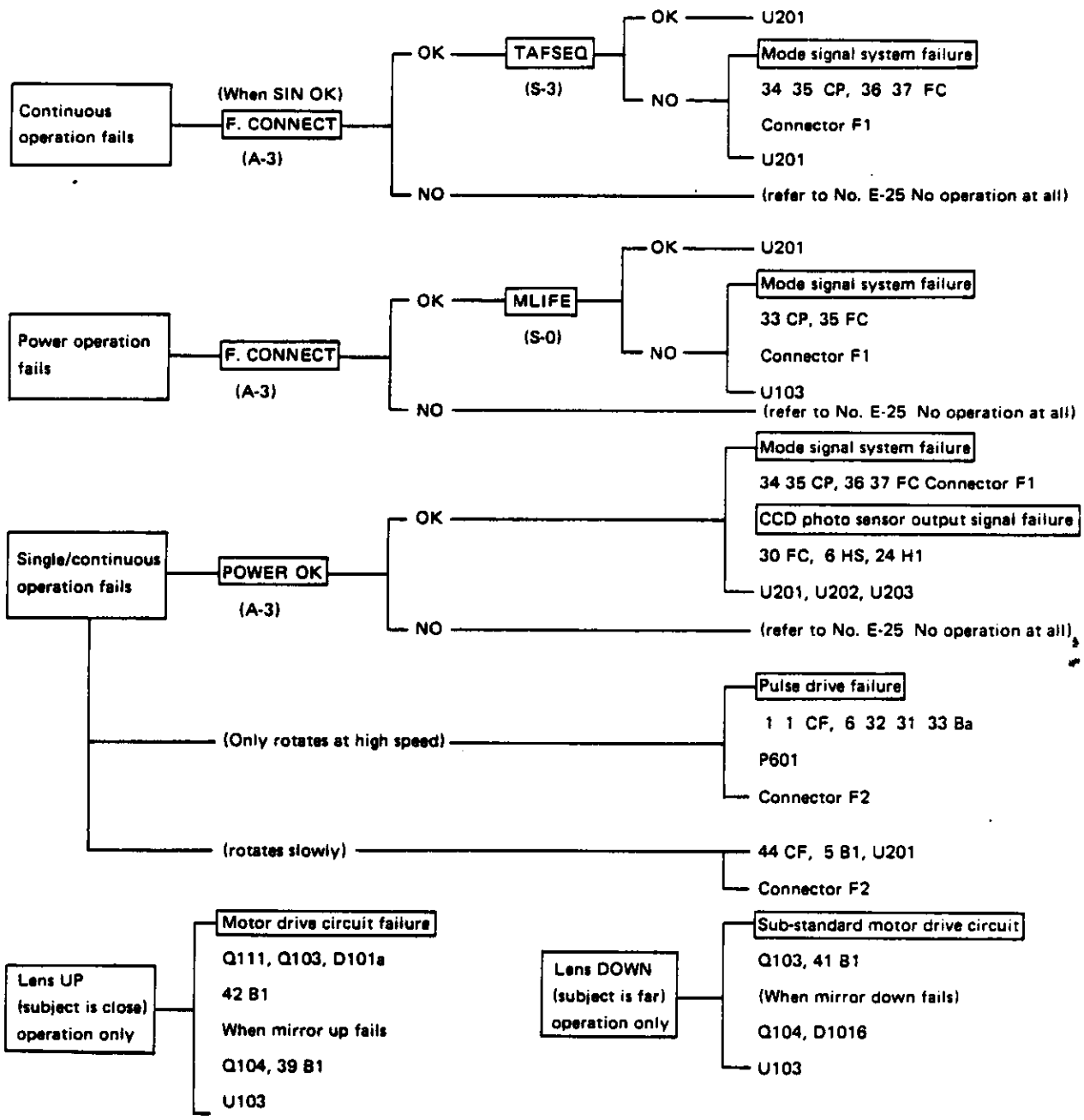
Continuous operation fails
(When SIN OK)
F. CONNECT
(A-3)
OK
TAFSEQ
(S-3)
OK
U201
NO
Mode signal system failure
34 35 CP, 36 37 FC
Connector F1
U201
NO
(refer to No. E-25 No operation at all)
Power operation fails
F. CONNECT
(A-3)
OK
MLIFE
(S-0)
OK
U201
NO
Mode signal system failure
33 CP, 35 FC
Connector F1
U103
NO
(refer to No. E-25 No operation at all)
Single/continuous operation fails
POWER OK
(A-3)
OK
Mode signal system failure
34 35 CP, 36 37 FC Connector F1
CCD photo sensor output signal failure
30 FC, 6 HS, 24 H1
U201, U202, U203
NO
(refer to No. E-25 No operation at all)
(Only rotates at high speed)
Pulse drive failure
1 1 CF, 6 32 31 33 Ba
P601
Connector F2
(rotates slowly)
44 CF, 5 B1, U201
Connector F2
Lens UP (subject is close) operation only
Motor drive circuit failure
Q111, Q103, D101a
42 B1
When mirror up fails
Q104, 39 B1
U103
Lens DOWN (subject is far) operation only
Sub-standard motor drive circuit
Q103, 41 B1
(When mirror down fails)
Q104, D1016
U103

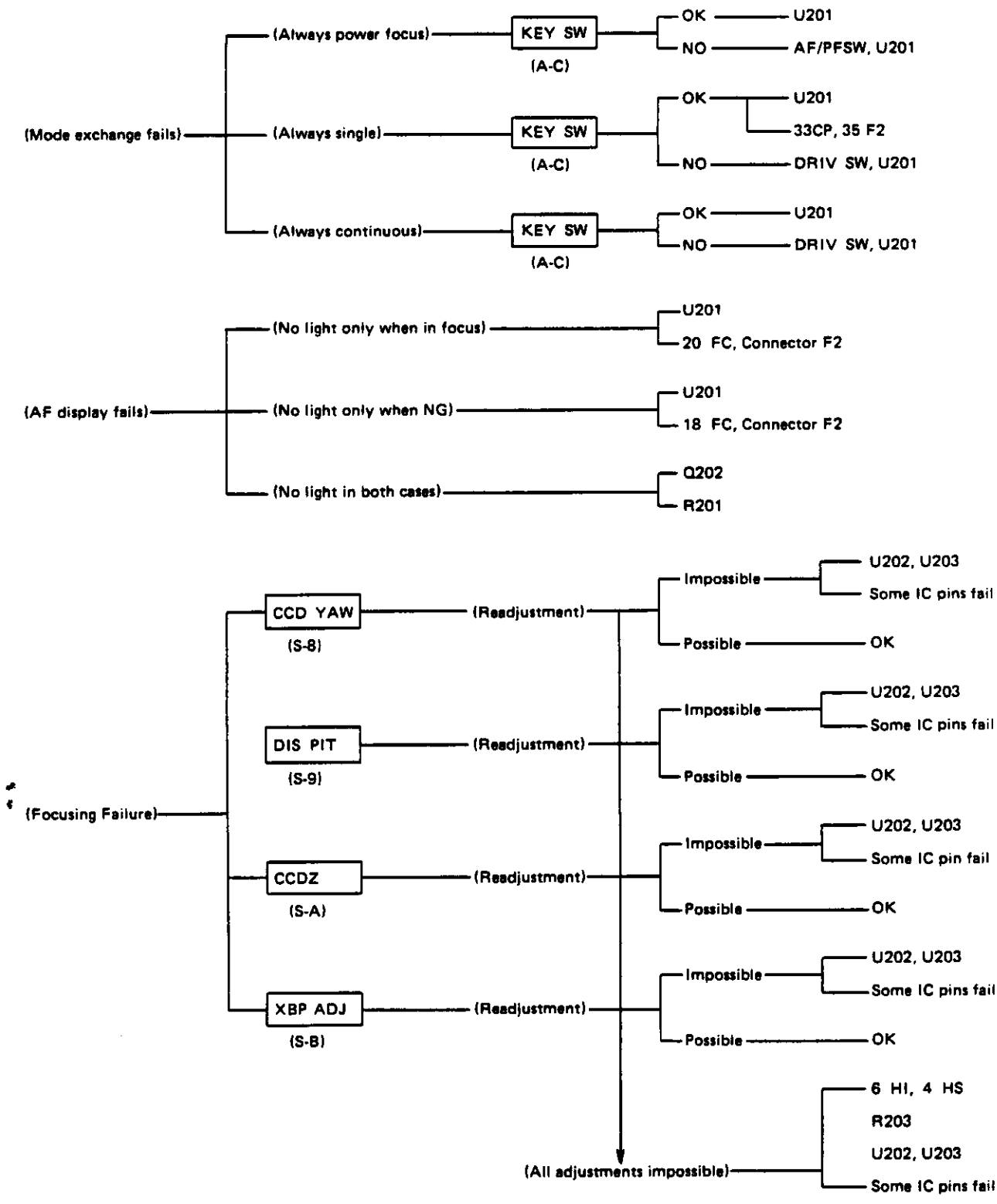
(Mode exchange fails)
(Always power focus)
KEY SW
(A-C)
OK
U201
NO
AF/PFSW, U201
(Always single)
KEY SW
(A-C)
OK
U201
33CP, 35 F2
NO
DRIV SW, U201
(Always continuous)
KEY SW
(A-C)
OK
U201
NO
DRIV SW, U201
(AF display fails)
(No light only when in focus)
U201
20 FC, Connector F2
(No light only when NG)
U201
18 FC, Connector F2
(No light in both cases)
Q202
R201
(Focusing Failure)
CCD YAW
(S-8)
(Readjustment)
Impossible
U202, U203
Some IC pins fail
Possible
OK
DIS PIT
(S-9)
(Readjustment)
Impossible
U202, U203
Some IC pins fail
Possible
OK
CCDZ
(S-A)
(Readjustment)
Impossible
U202, U203
Some IC pin fail
Possible
OK
XBP ADJ
(S-B)
(Readjustment)
Impossible
U202, U203
Some IC pins fail
Possible
OK
(All adjustments impossible)
6 HI, 4 HS
R203
U202, U203
Some IC pins fail

5. AE Operation Failure

◇ Discrimination

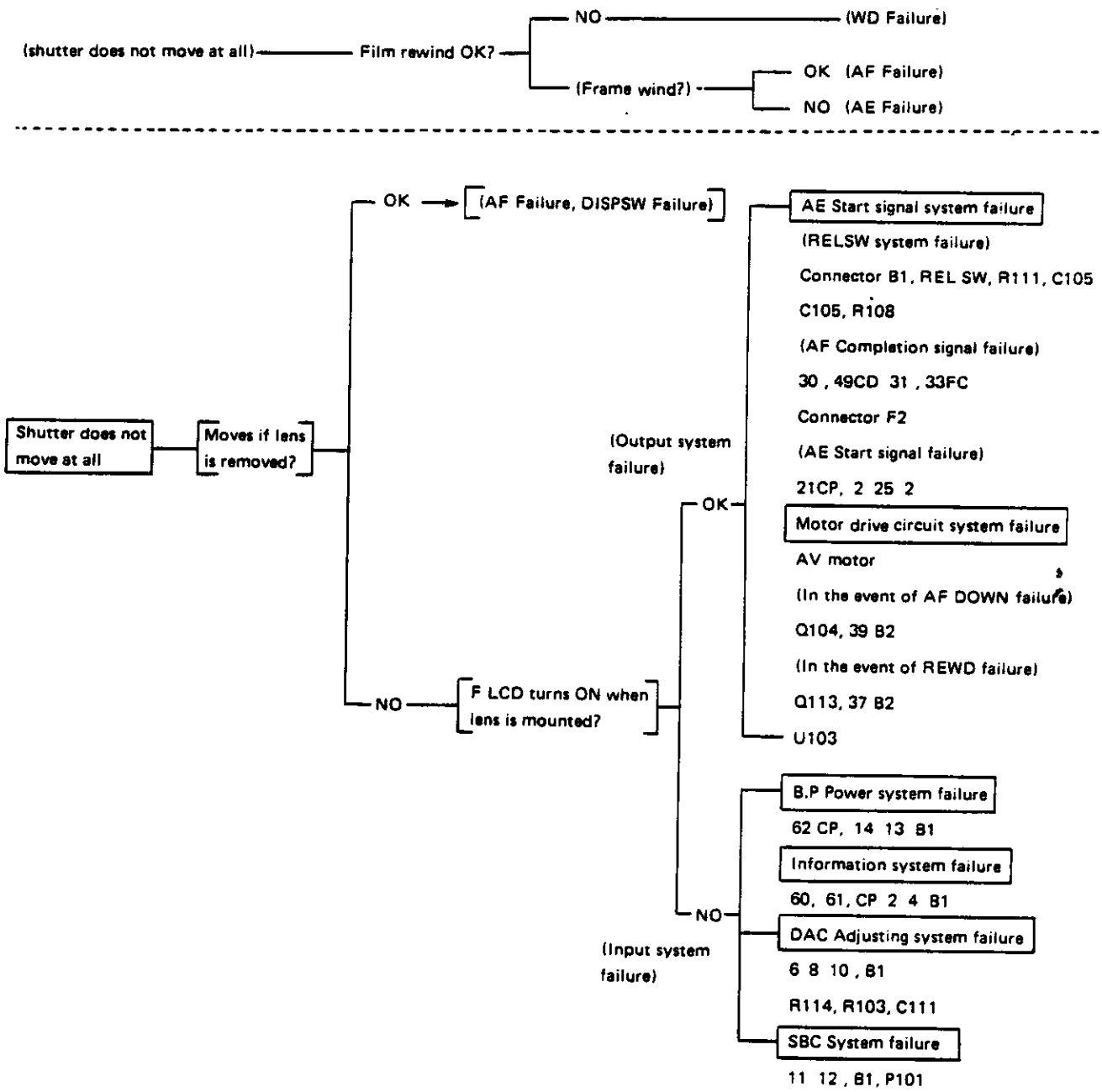

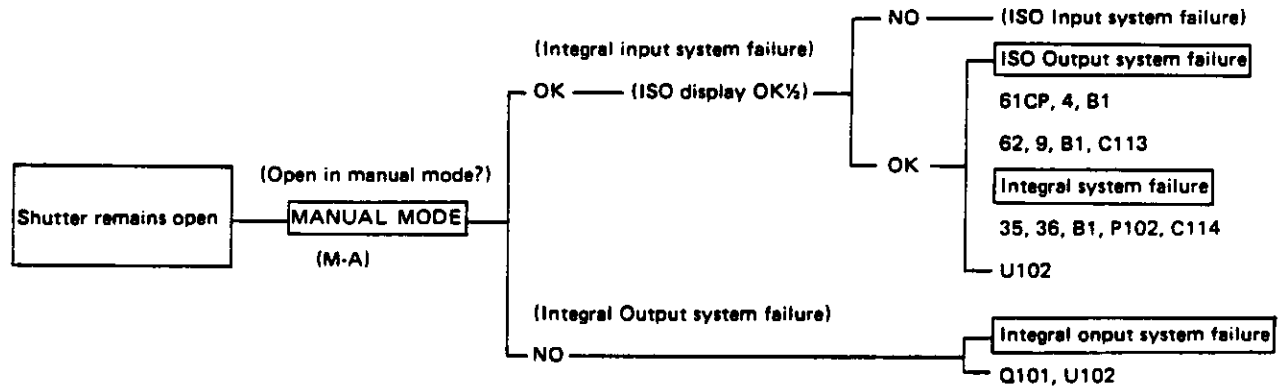
Shutter remains open
(Open in manual mode?)
MANUAL MODE
(M-A)
(Integral input system failure)
OK
(ISO display OK½)
NO
(ISO Input system failure)
ISO Output system failure
61CP, 4, B1
62, 9, B1, C113
OK
Integral system failure
35, 36, B1, P102, C114
U102
(Integral Output system failure)
NO
Integral onput system failure
Q101, U102

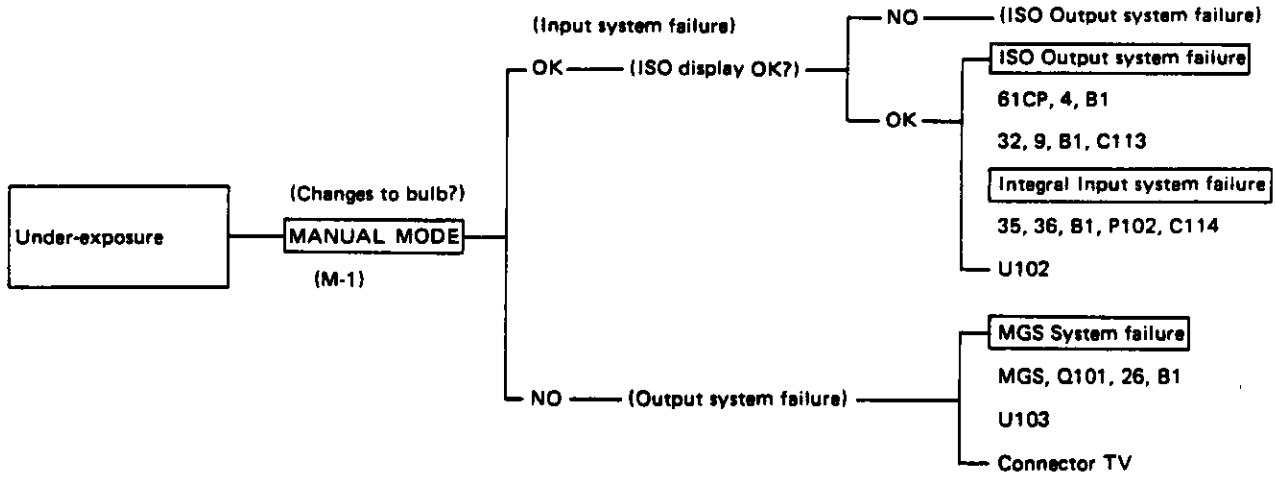
Under-exposure
(Changes to bulb?)
MANUAL MODE
(M-1)
(Input system failure)
OK
(ISO display OK?)
NO
(ISO Output system failure)
ISO Output system failure
61CP, 4, B1
32, 9, B1, C113
OK
Integral Input system failure
35, 36, B1, P102, C114
U102
NO
(Output system failure)
MGS System failure
MGS, Q101, 26, B1
U103
Connector TV

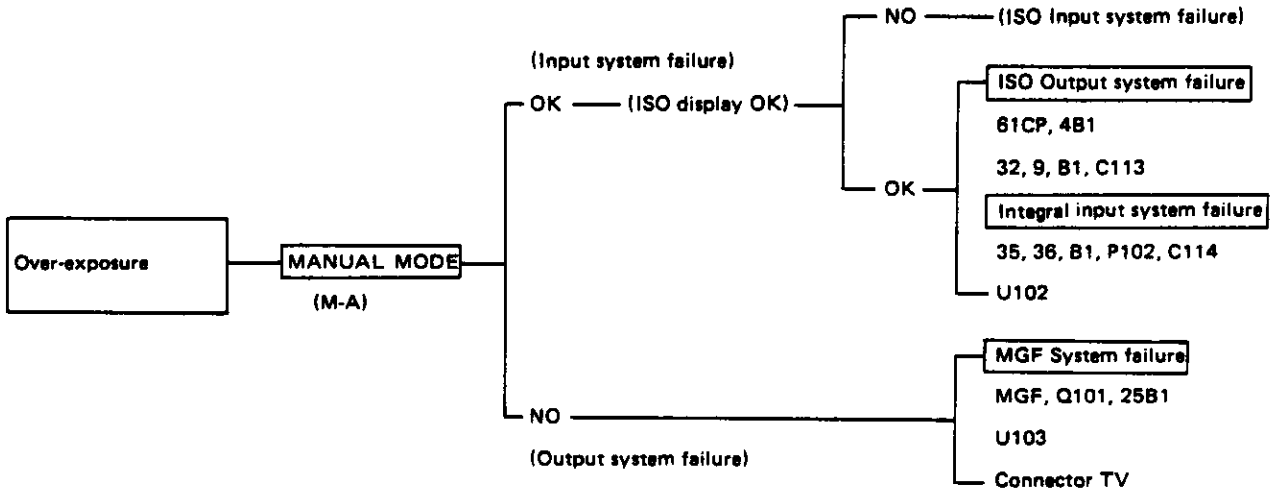
Over-exposure
MANUAL MODE
(M-A)
(Input system failure)
OK
(ISO display OK)
NO
(ISO Input system failure)
ISO Output system failure
61CP, 4B1
32, 9, B1, C113
OK
Integral input system failure
35, 36, B1, P102, C114
U102
NO
(Output system failure)
MGF System failure
MGF, Q101, 25B1
U103
Connector TV

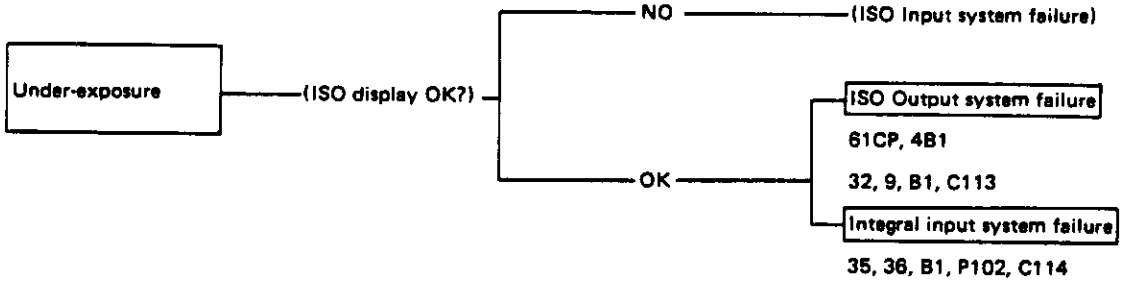
Under-exposure
(ISO display OK?)
NO
(ISO Input system failure)
OK
ISO Output system failure
61CP, 4B1
32, 9, B1, C113
Integral input system failure
35, 36, B1, P102, C114

6. Mirror Operation Failure

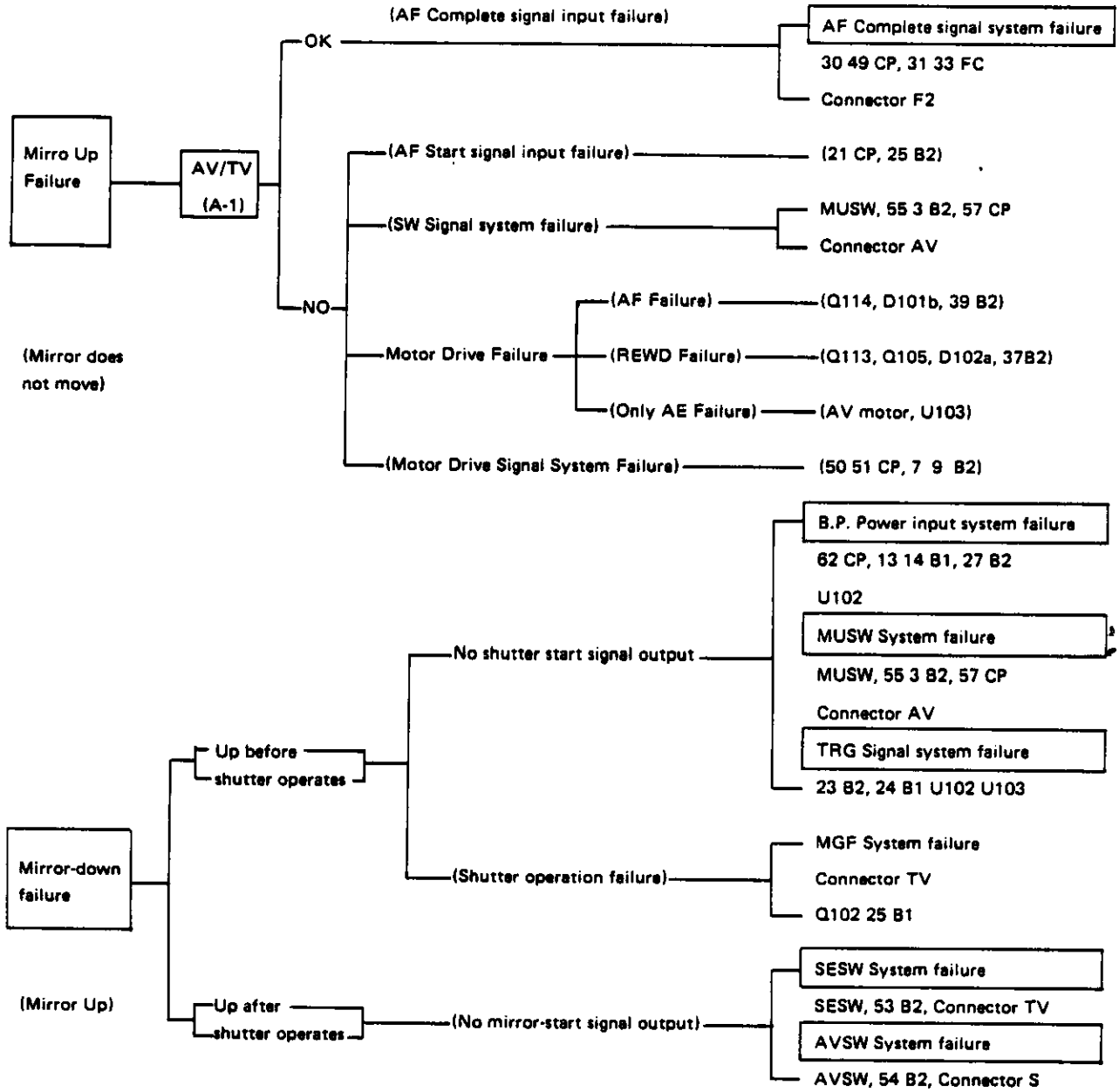

7. Film Wind and Film Rewind Failure

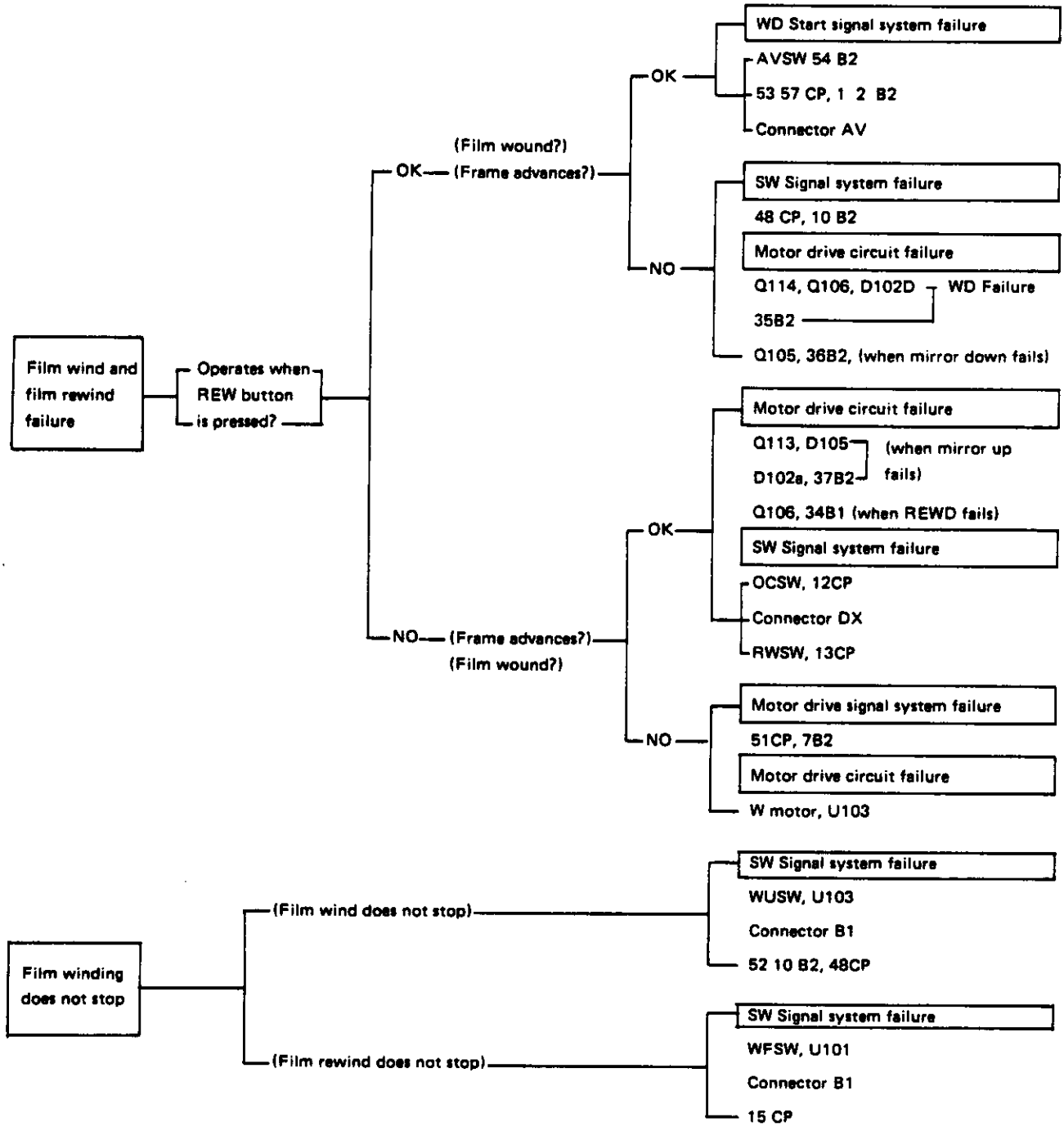

8. Aperture Operation Failure

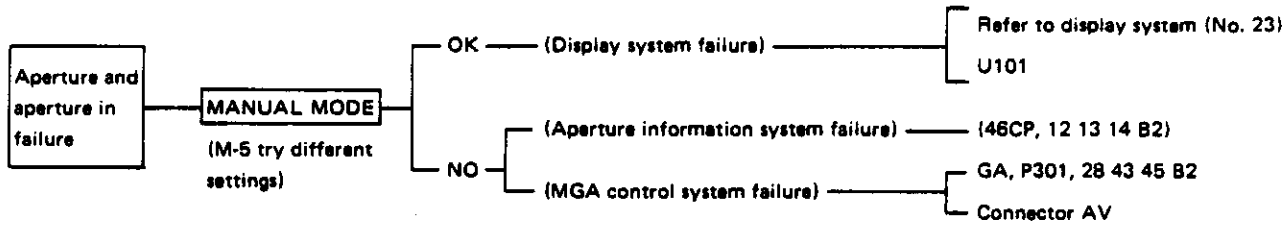

9. AE Lock Operation Failure

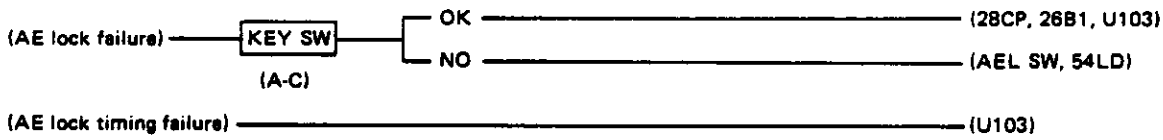

10. Self Operation Failure

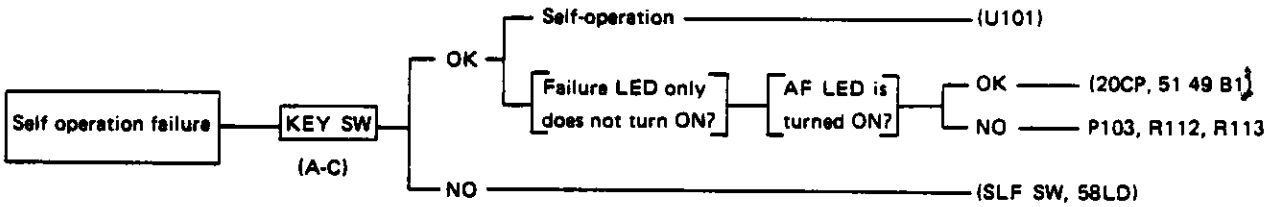

11. Flash Operation Failure

◇ T-Series Flash Operation Failure

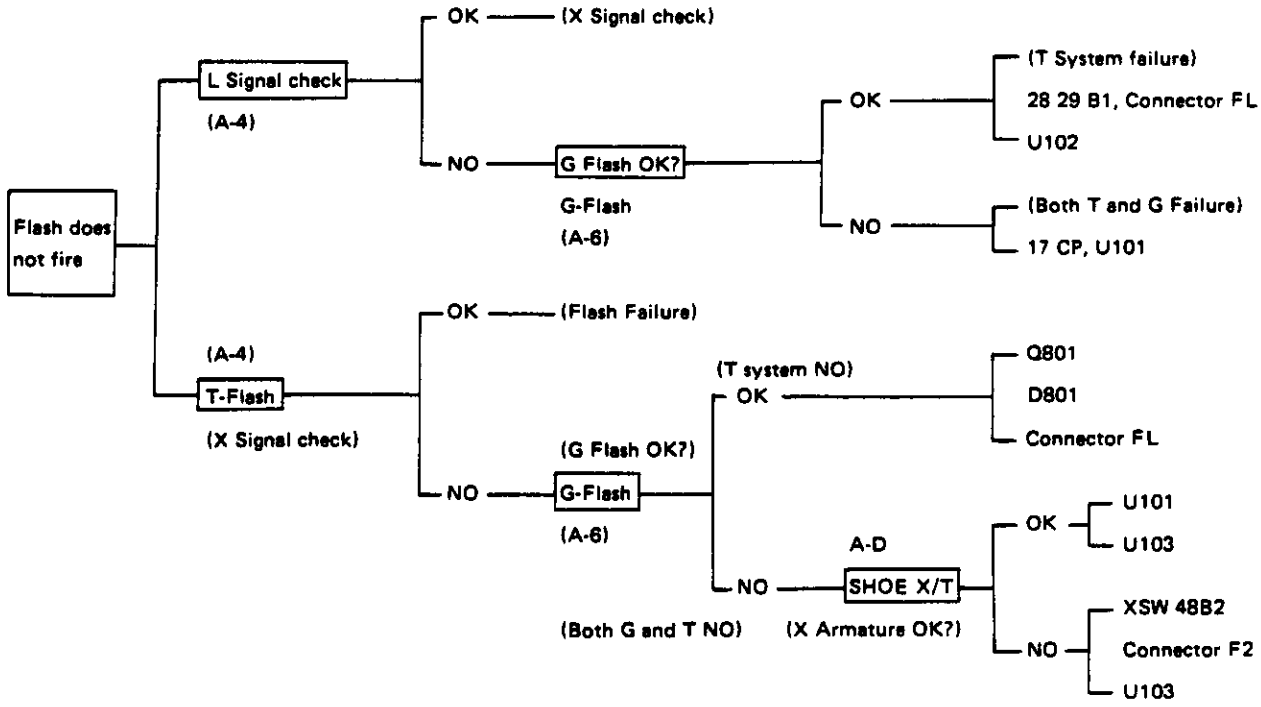

◇ G Flash Operation Failure

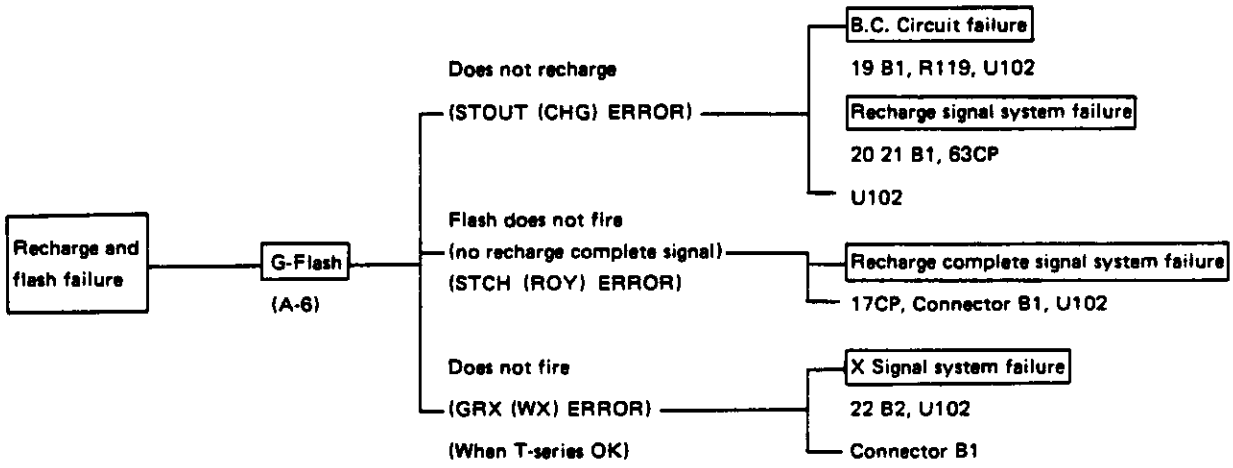

◇ F280 Flash Operation Failure

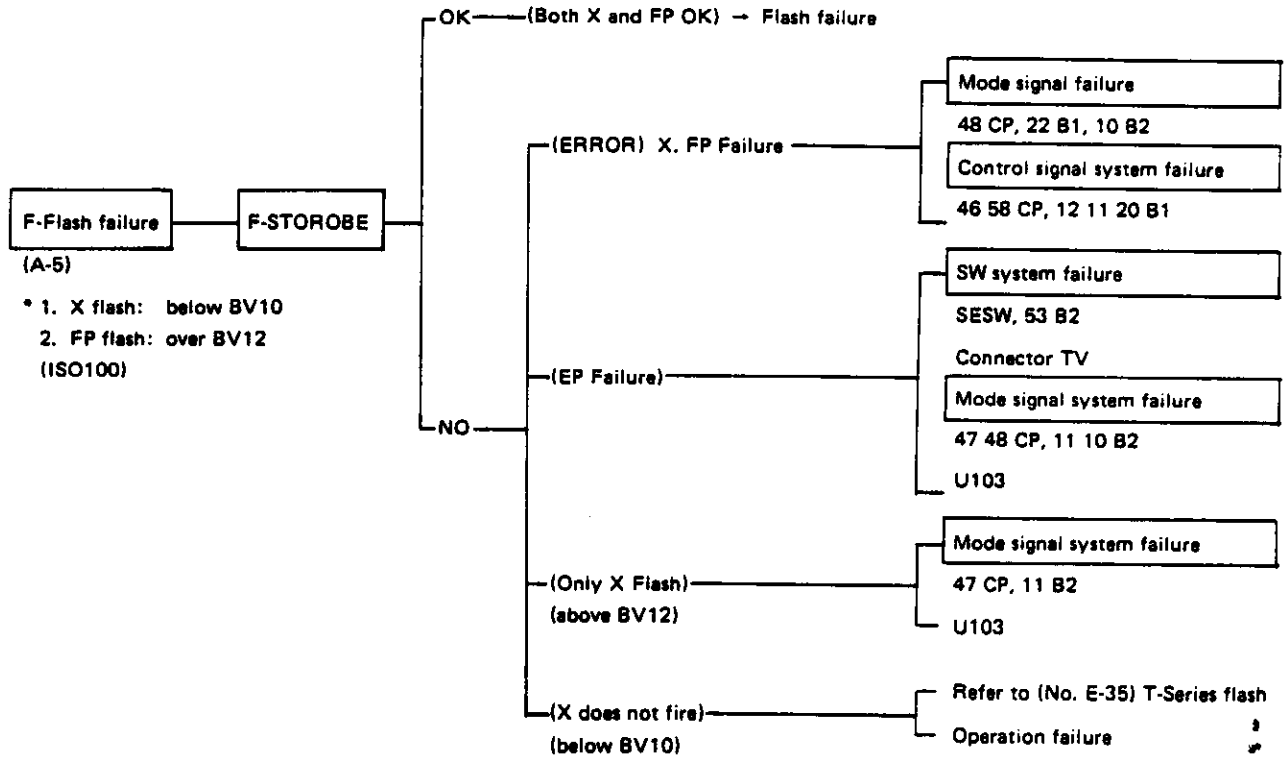

12. AF Illumination Failure

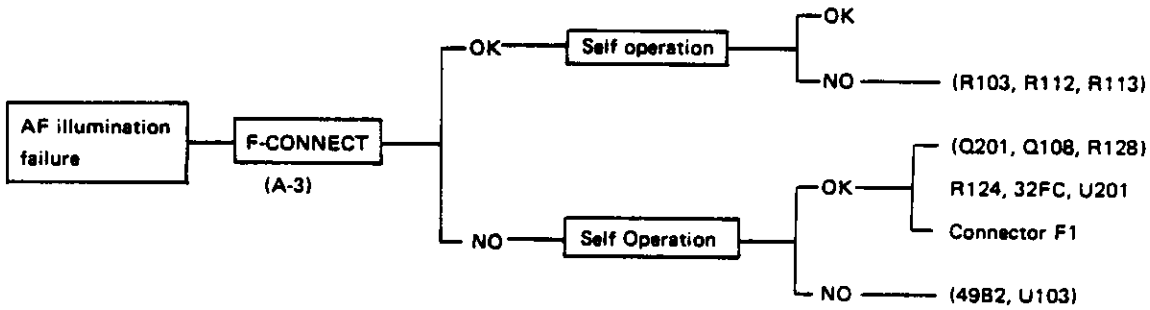

I

DESCRIPTION OF MECHANISM

I. DESCRIPTION OF MECHANISM

CONTENTS

1. PRODUCT DESCRIPTION

ADS 1 is a fully-automatic single-lens reflex camera which incorporates an auto-focus mechanism (TTL-PS zero-in type), programmed exposure, and a power flash grip, etc. In addition, when used together with a Flash 280, flash synchronization is possible with any shutter speed up to 1/2000 sec. The flash is designed to fire automatically at any brightness for shutter speeds below 1/100 sec.. While a Super FP flash is automatically selected for shutter speeds of over 1/100 sec..

The ADS 1 boasts the following features:

1. Completely automated picture taking is possible thanks to auto-focus, auto-loading, auto-film winding and auto-film rewinding.
2. The Super FP flash allows full-speed synchronization. The use of high-level automation makes day time synchronization simple.
3. Thanks to the grip flash, built-in flash capability is now achieved in a single lens reflex camera. The flash is always ready for use.
4. The AF mode is switchable to Single/Continuous.
5. A programmed exposure function makes problem-free photography a reality for everyone. In addition, it is possible to program any combination of aperture and shutter speed using the camera's program shift function.
6. With the help of built-in illumination, AF is now possible even in darkness.
7. In manual focusing situations, a built-in motor provides power-assisted focusing for the camera.
8. Frame counter, ISO and mode are displayed on a large, easy-to-read LCD panel which provides a multi-display function such as an interactive operation display.
9. Interchangeability is a key feature of the OM system. Exchange lens can be used in the aperture-preferred mode. TTL is available for flashes in the T series.
10. The camera's sophisticated electronic functions are controlled by two micro-computers.
11. Three entirely separate micro-motors are used for AF use, film winding and rewinding and aperture and mittor control.
12. With the help of static memory, exposure data is retained even after the batteries have been removed. From now on, the ADS1 will become the backbone of the new OLYMPUS AF single lensreflex system.

OUTLINE OF ELECTRICAL CIRCUIT

1. Block Diagram

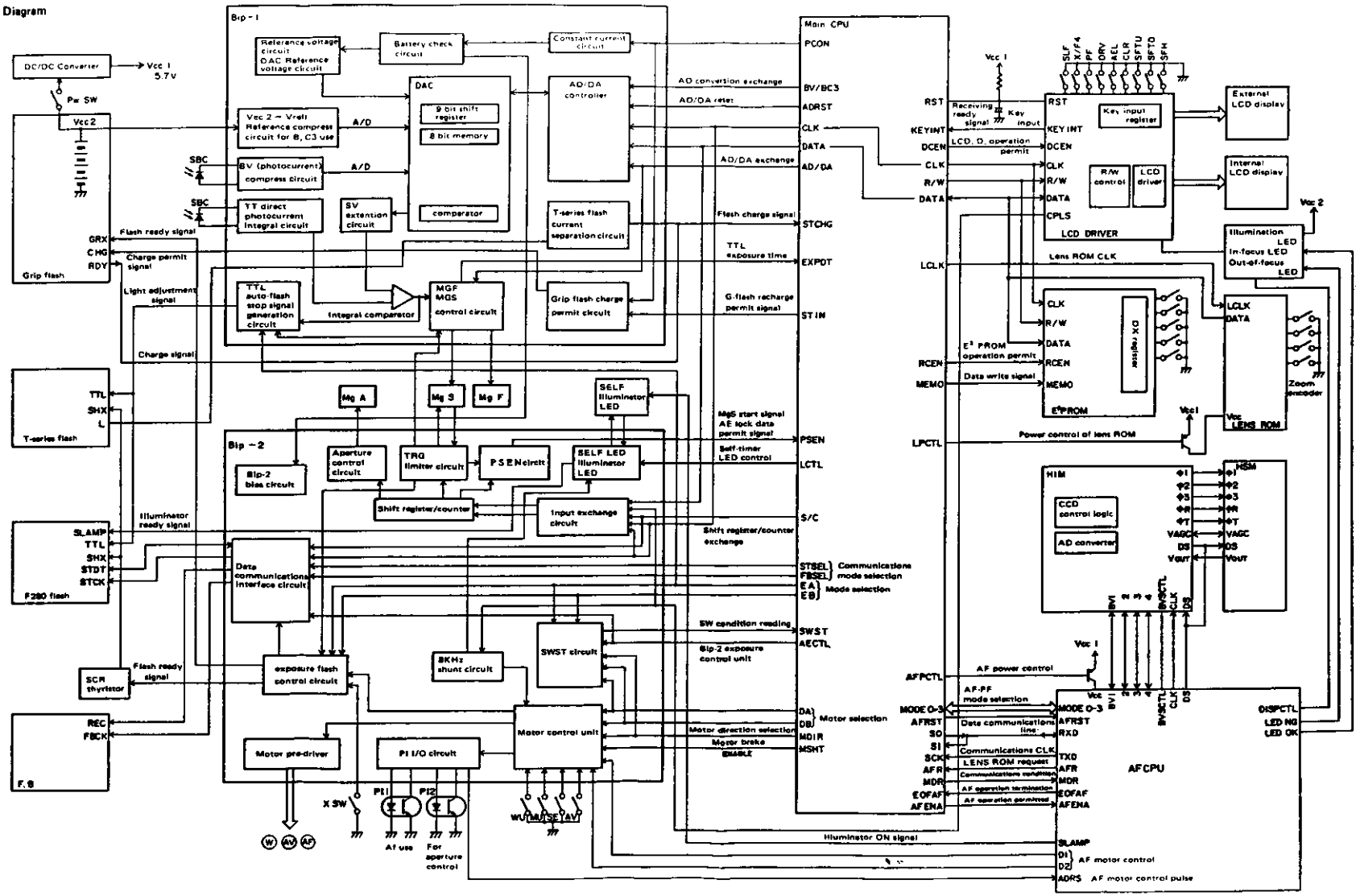

2. Description of electronic parts

Designation	Function	Description
Bip-1	• Photocurrent compress A/D • Direct integral • D/A Determination voltage rebuild • Power voltage check • Flash interface	• B.C. 1 ..... Carry out B, C of V_{CC1}, all bias off when $V_{CC1} < 5.0V$ • B.C. 3 ..... Used for display. Compress voltage of V_{CC2}. • Flash BC ..... Used for power flash grip. Prohibit flash recharging when $V_{CC2} < 2.6V$ • PCON ..... Power control signal from MCPU. Control Bip 1 and power flash grip.
Bip-2	• Motor control • Magnet control • Sequence control (counter + SW input) • P.I. interface	• DA. DB ..... Motor selection • MDIR ..... Specifies rotating direction of AV, WIND motor. • MSHT ..... Brake of AV, WIND motor • EA. EB ..... Control of exposure mode • S/C ..... Exchange signal of shift register/counter MCPU ↔ Flash communications direction exchange • PSEN ..... AE lock data pemit signal • SWST ..... Outputs the condition of M, U, SW, SESW, WUSW, and AVOSW.
E^2 PROM	• Adjustment data • Frame counter data • DX input	• RCEN ..... Operation permitted signal for E^2 PROM • R/W ..... Exchange signal of read and write for E^2 PROM • MEMO ..... Write signal for data
Display I.C	• LCD driver • Key input	• DCEN ..... LCD. D. operation permitted signal
Lens ROM	• Focal distance • F number	
Main CPU	• Main sequence control	
AF CPU	• AF control	• MODEO 0 ~ 3 ..... AF. PF mode selection signal • TXD Communications CLK signal • EOFAF AF operation termination signal • AFENA AF operation permitted signal • AFR LEWS ROM request signal

O Switches

1) PW SW	Power switch	Power on by OFF → ON
2) REL SW	Release sequence start	Start by OFF → ON
3) DISP SW	Display starts	Displays by OFF → ON
4) BM SW	New series lens detection	OFF when new lens is mounted or when no lens is mounted ON when conventional lens is mounted or when lens lock button is depressed.
5) OC SW	Rear cover open/closed	ON → OFF when rear cover is closed
6) WF SW	Film advance display	OFF · ON is displayed 3 times for each frame
7) WU SW	W motor rotation terminates	OFF → ON when film winding completes ON → OFF while mirror is being raised
8) AV SW	AV motor reverse terminates W motor rotations starts	ON → OFF when aperture is fully-opened
9) MU SW	AV motor rotation terminates Shutter's front curtain starts Flat flash starts	ON → OFF after mirror up is completed
10) SE SW	AV motor reverse starts Flat flash terminates	ON → OFF when rear curtain movement is completed
11) RW SW	Rewind starts	ON while rewinding ON → Off when rear cover is open
12) DX SW	Reads DX film code	ON when no film cartridge is inserted

3. Flow chart

1. Overall operation

Single AF · AF lens · Programmed AE

Power switch ON → DC/DC Conv main CPU starts

AFCPU starts → Lens is set to ∞ by AF motor drive

→ Light-measurement · display starts

G flash control communications

→ Release button half depressed → Distance measurement starts → AF motor rotates

In focus

Release ON →

Aperture control → AV motor rotates

↓

Aperture magnet (MGA) ON ← Aperture positional pulse

→ Aperture lever stops

↓

Mirror-up

↓

Mirror-bound time delay ← MUSW OFF

↓

AV motor brake

Front curtain MG control → Front curtain starts

Photocurrent integration starts

integration completes

Rear curtain MG control → Rear curtain starts

AV motor reverses ← ↓

SESW OFF

→ (Rear curtain ends)

Mirror-down

↓

Aperture fully-opened

Light measurement · display starts

↓

AV motor stops ← AV SW OFF

W motor rotates → Winding shutter charge

↓

W motor stops ← WUSW ON

↓ (30s)

Release button half depressed → Light measurement · display OFF

2. Overall flow chart

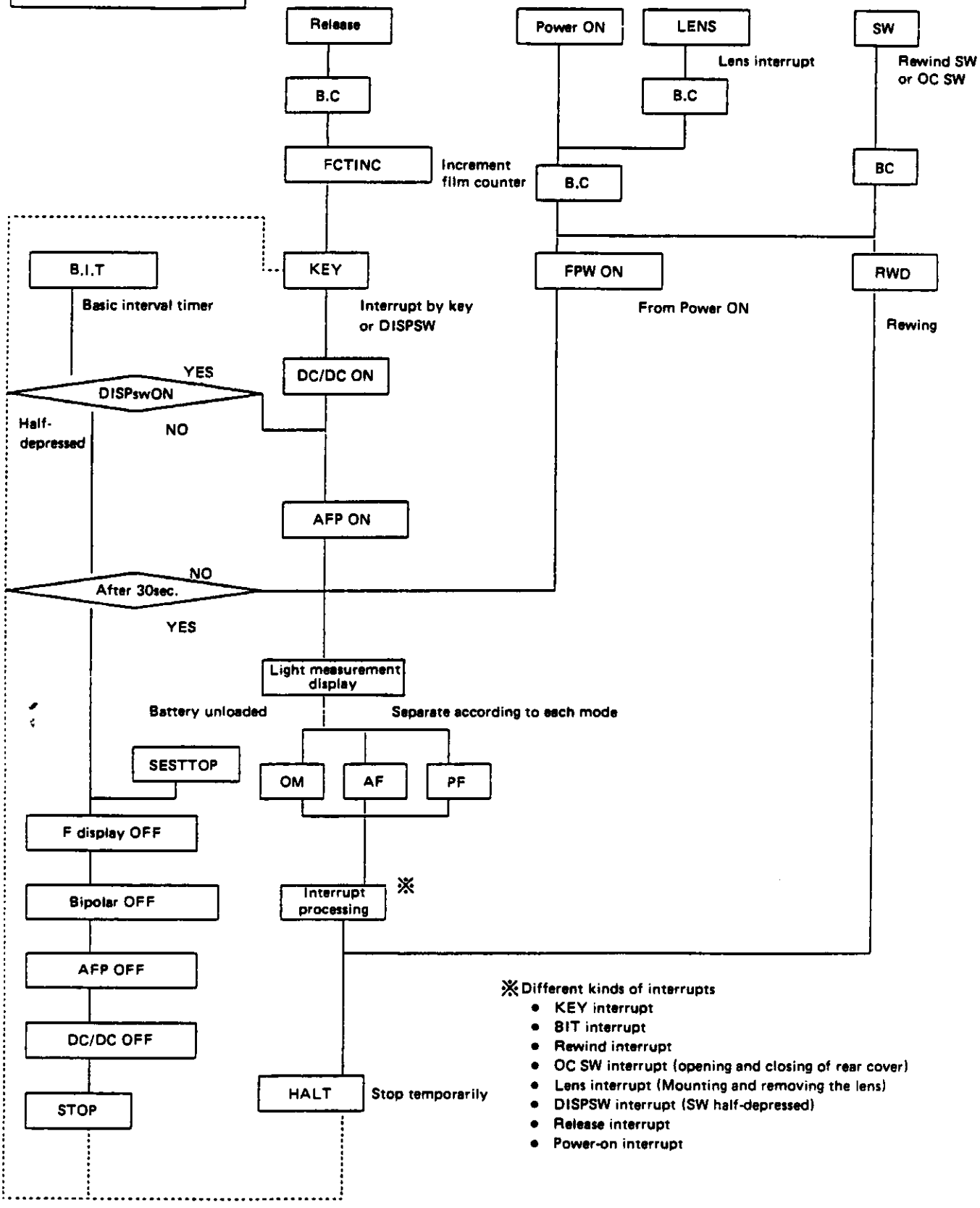

※Different kinds of interrupts

- KEY interrupt
- BIT interrupt
- Rewind interrupt
- OC SW interrupt (opening and closing of rear cover)
- Lens interrupt (Mounting and removing the lens)
- DISPSW interrupt (SW half-depressed)
- Release interrupt
- Power-on interrupt

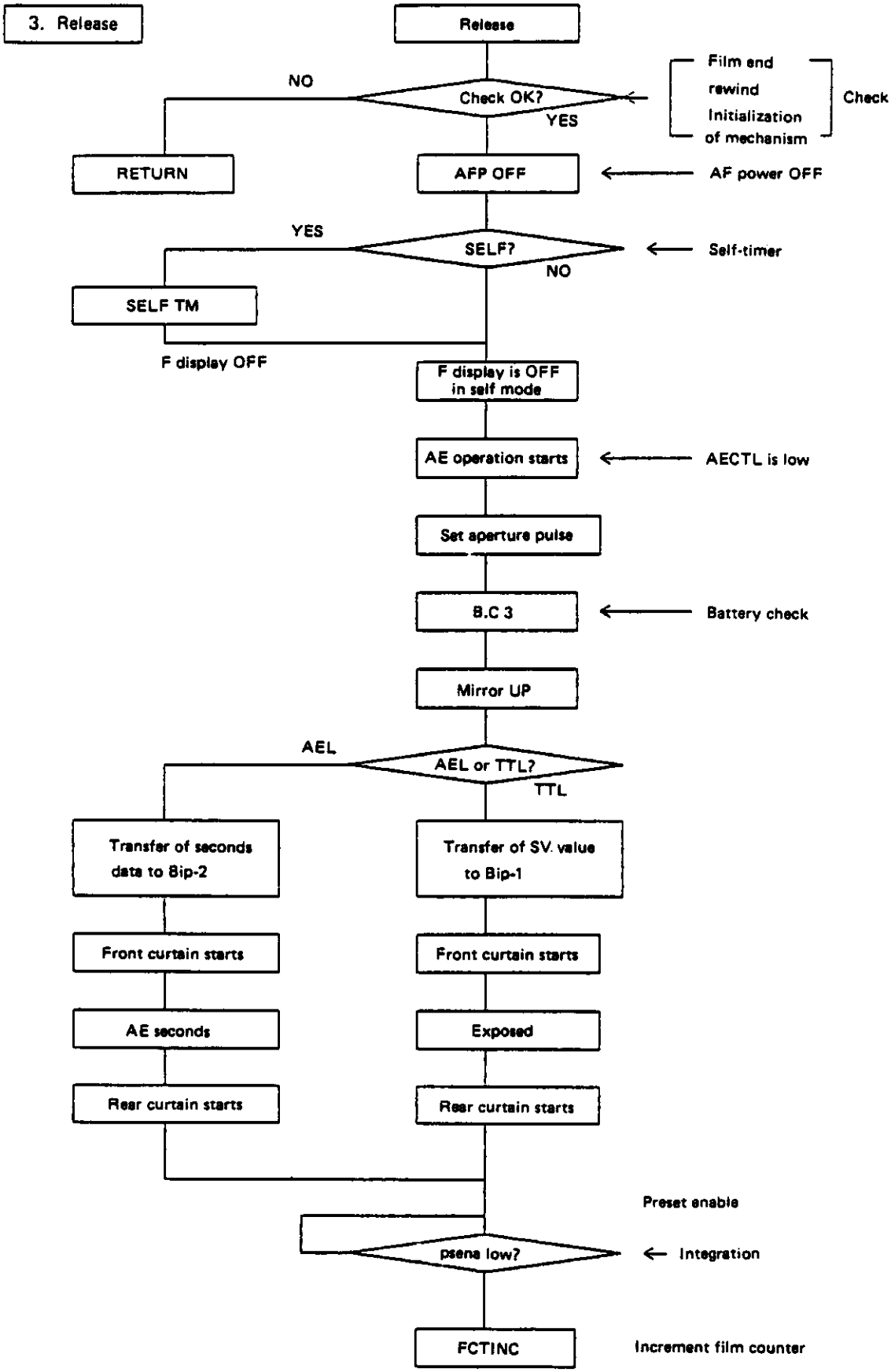
3. Release
Release
NO
Check OK?
YES
Film end
rewind
Initialization
of mechanism
Check
RETURN
AFP OFF
AF power OFF
YES
SELF?
NO
Self-timer
SELF TM
F display OFF
F display is OFF
in self mode
AE operation starts
AECTL is low
Set aperture pulse
B.C 3
Battery check
Mirror UP
AEL
AEL or TTL?
TTL
Transfer of seconds
data to Bip-2
Transfer of SV. value
to Bip-1
Front curtain starts
Front curtain starts
AE seconds
Exposed
Rear curtain starts
Rear curtain starts
Preset enable
psena low?
Integration
FCTINC
Increment film counter

4. Increment film counter

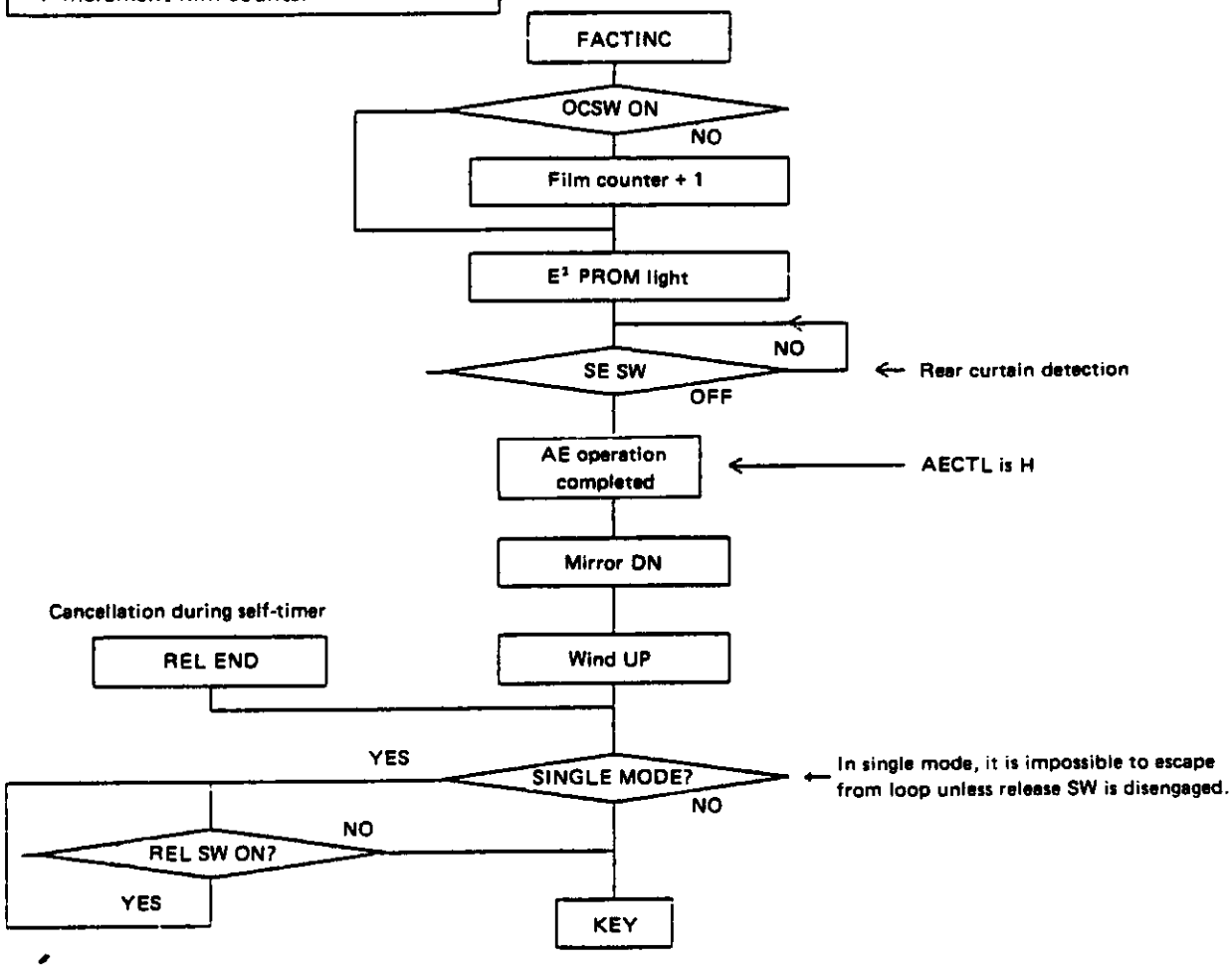

5. Mechanism initialization

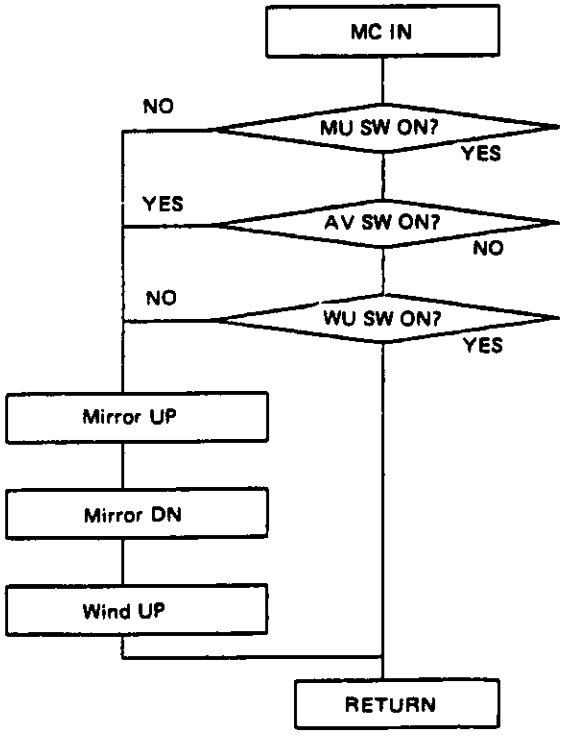

6. Power ON

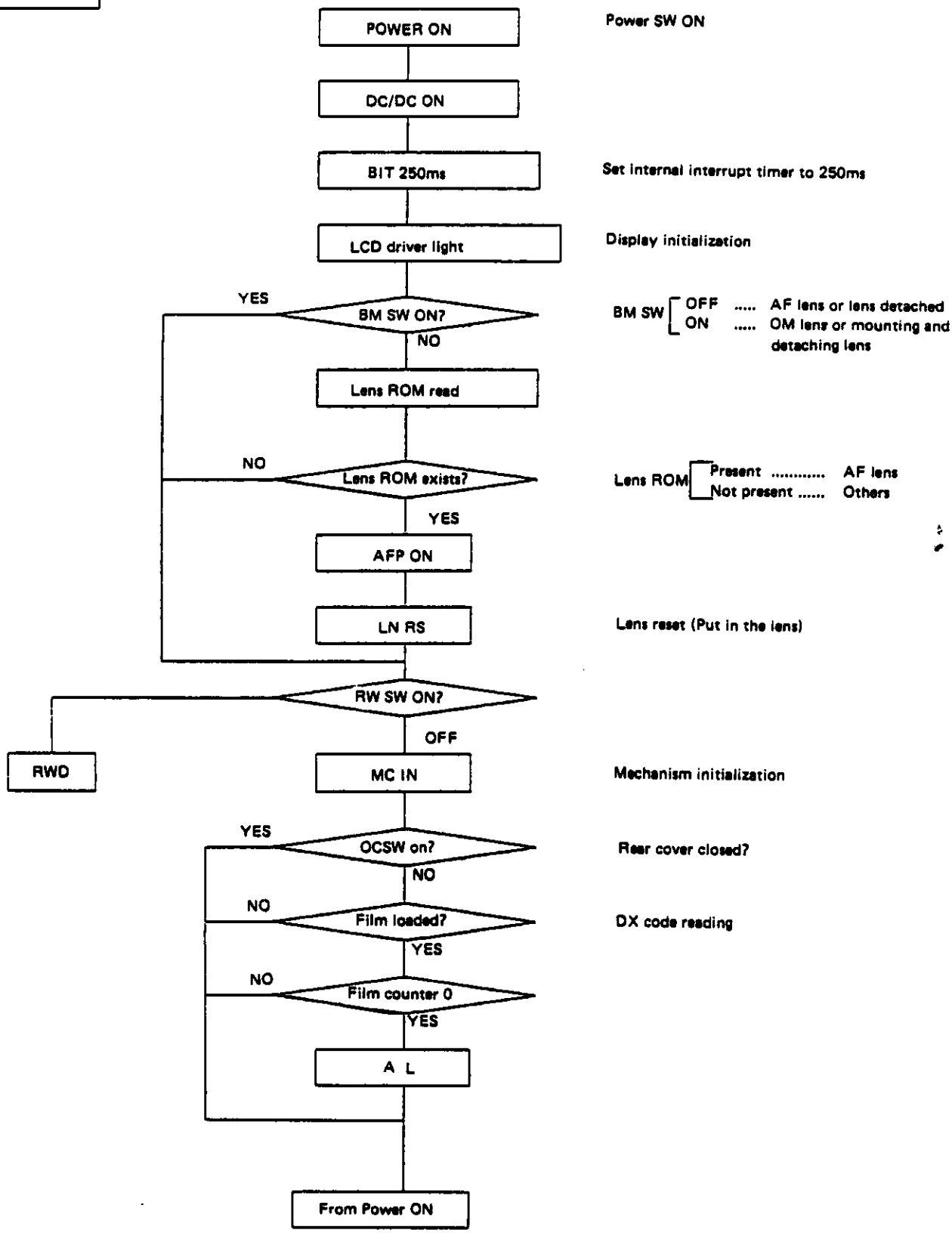
POWER ON
Power SW ON
DC/DC ON
BIT 250ms
Set internal interrupt timer to 250ms
LCD driver light
Display initialization
YES
BM SW ON?
NO
BM SW
OFF ..... AF lens or lens detached
ON ..... OM lens or mounting and detaching lens
Lens ROM read
NO
Lens ROM exists?
Lens ROM
Present ..... AF lens
Not present ..... Others
YES
AFP ON
LN RS
Lens reset (Put in the lens)
RW SW ON?
OFF
RWD
MC IN
Mechanism initialization
YES
OCSW on?
Rear cover closed?
NO
NO
Film loaded?
DX code reading
YES
NO
Film counter 0
YES
A L
From Power ON

7. Film rewind, rear cover SW interrupt

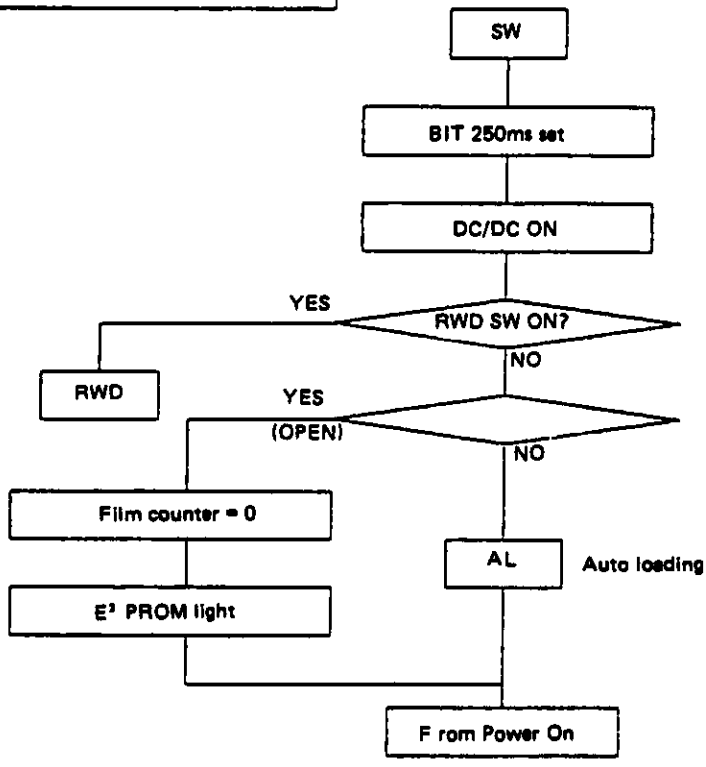

8. Rewind

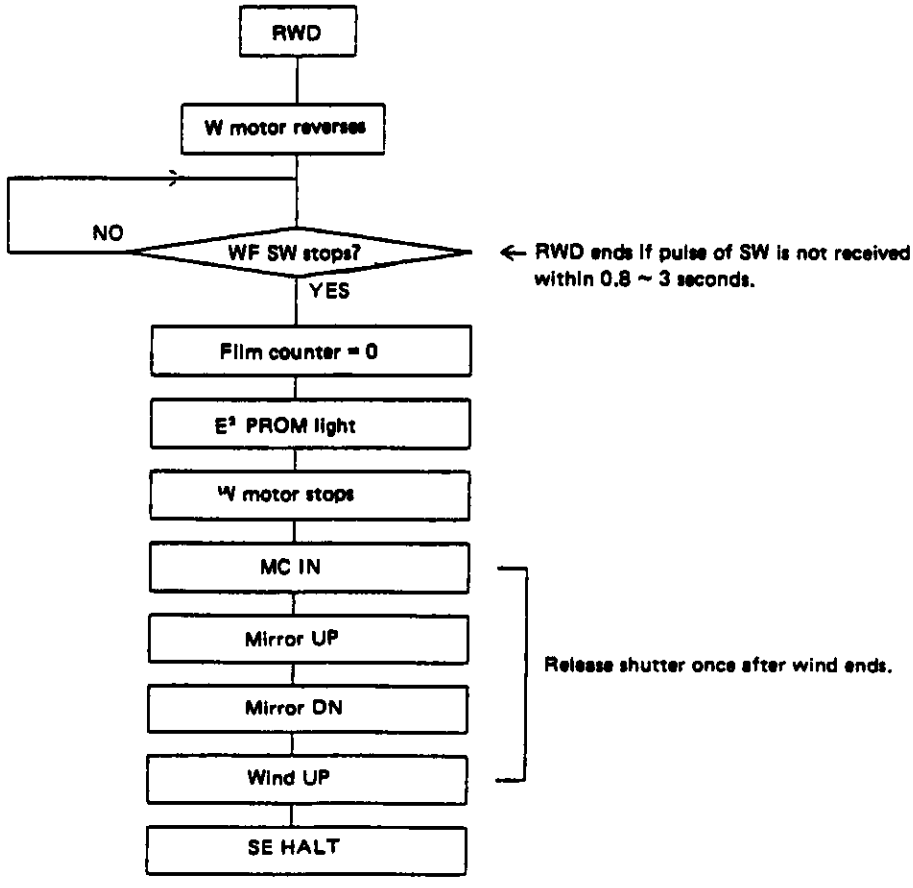

9. Auto Focus

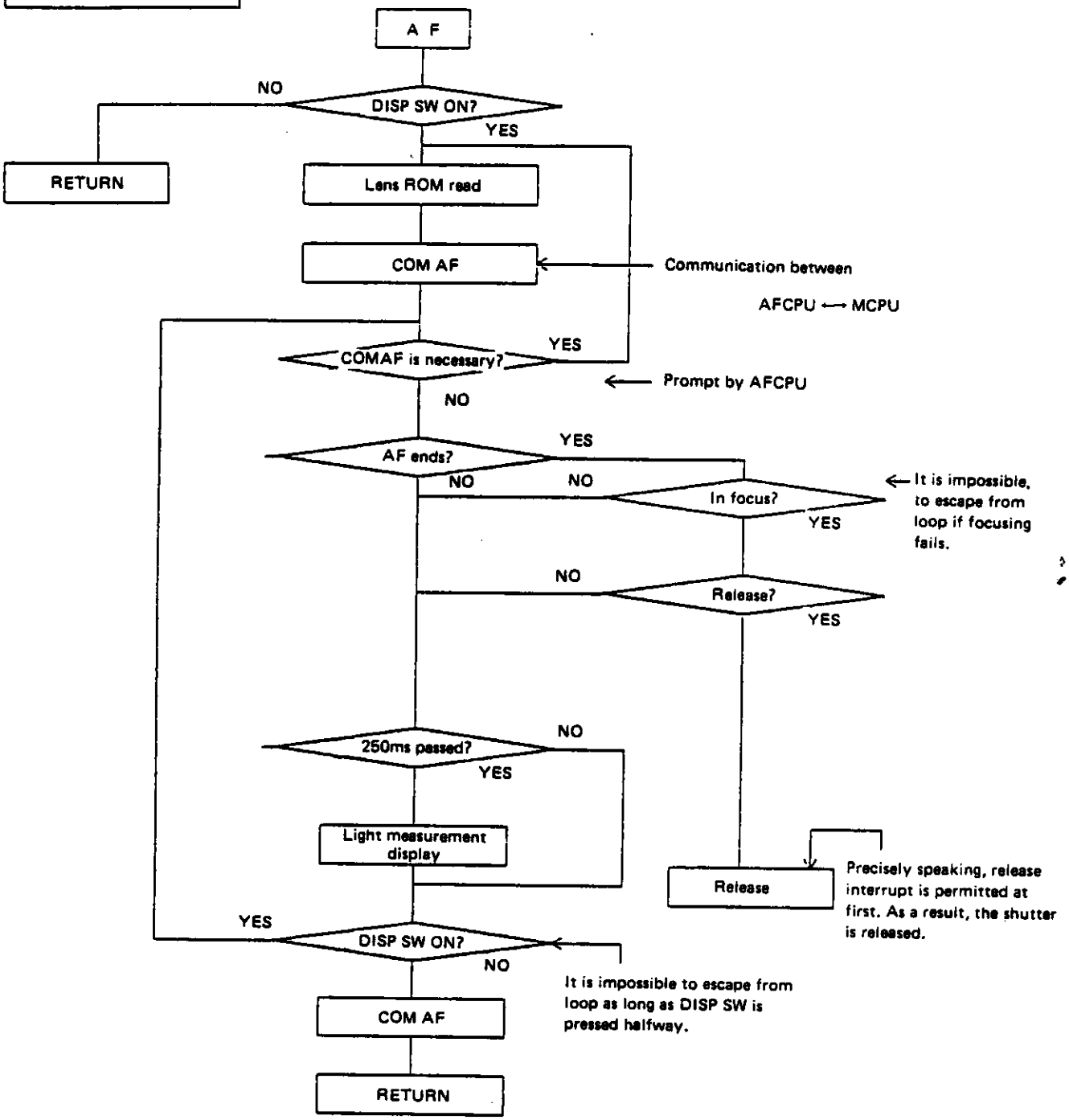
A F
DISP SW ON?
NO
YES
RETURN
Lens ROM read
COM AF
Communication between
AFCPU ⟷ MCPU
COMAF is necessary?
YES
Prompt by AFCPU
NO
AF ends?
YES
NO
NO
In focus?
It is impossible, to escape from loop if focusing fails.
YES
NO
Release?
YES
250ms passed?
NO
YES
Light measurement display
Release
Precisely speaking, release interrupt is permitted at first. As a result, the shutter is released.
YES
DISP SW ON?
NO
It is impossible to escape from loop as long as DISP SW is pressed halfway.
COM AF
RETURN

10. Power Focus

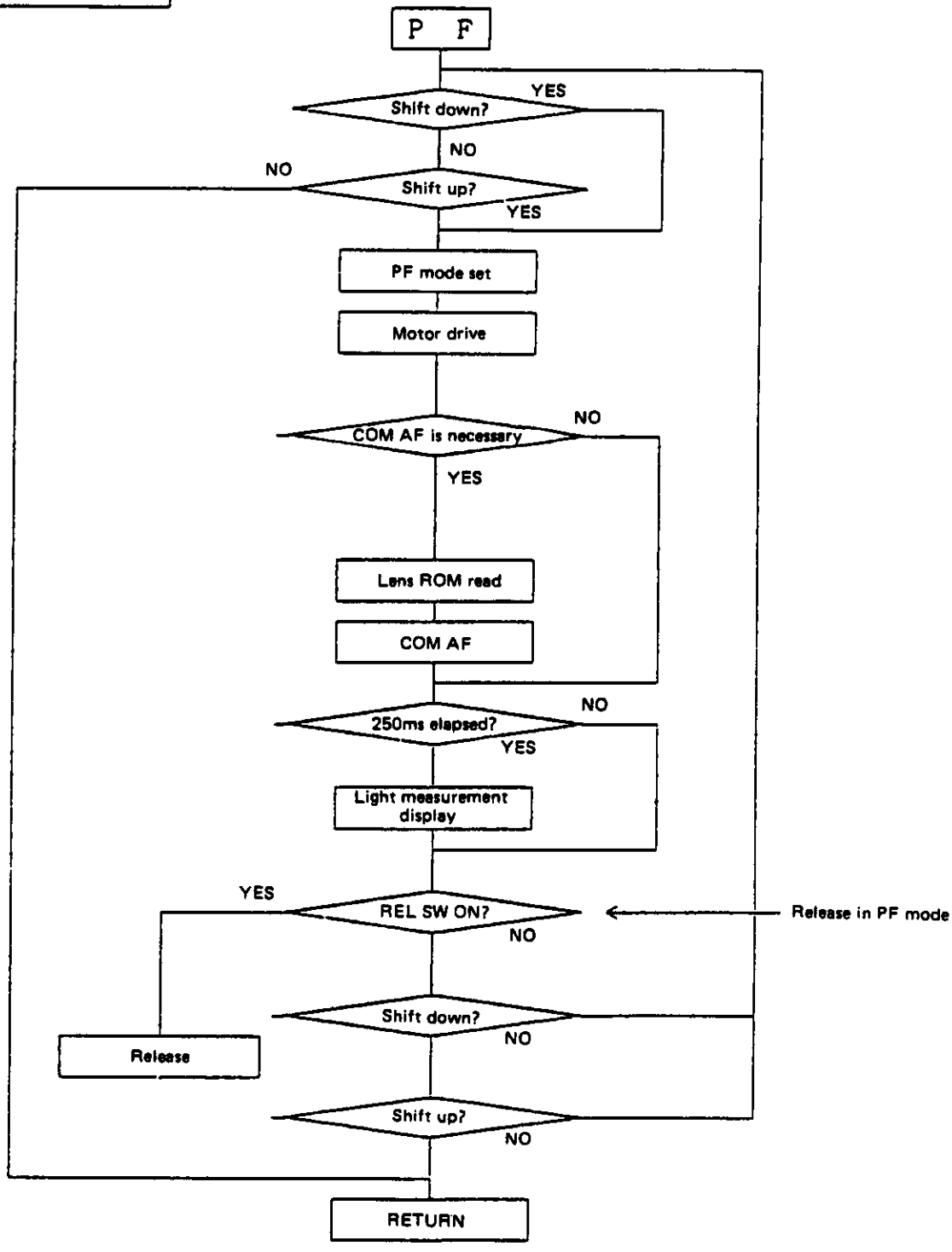

11. Auto loading

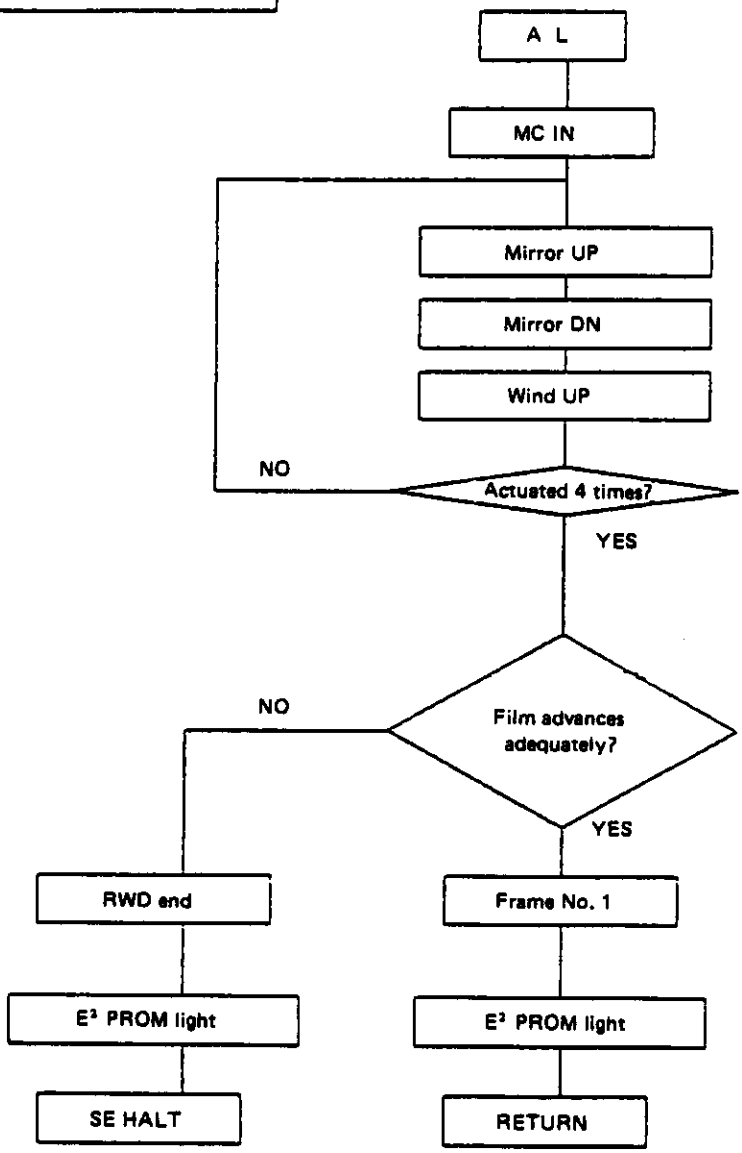

Pulses are counted by film transport SW (Pulse No. more than 10)

12. Mirror up

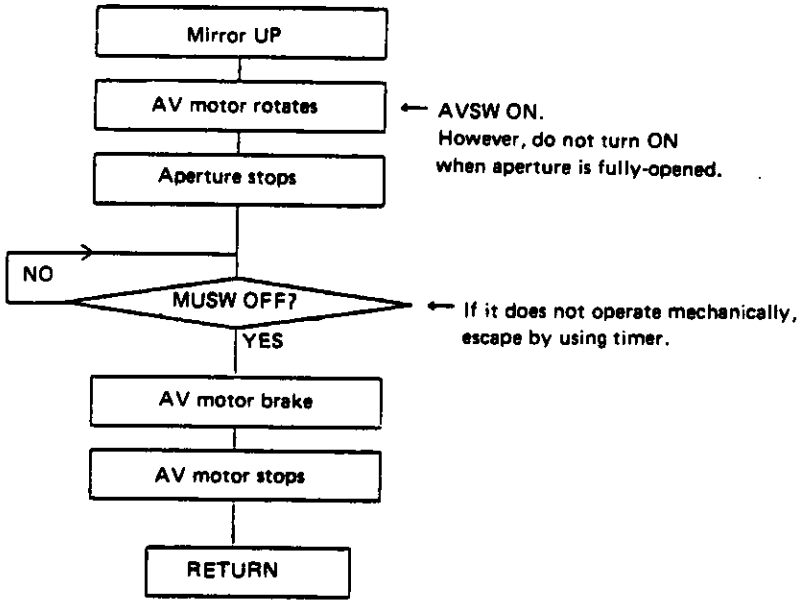

13. Mirror down

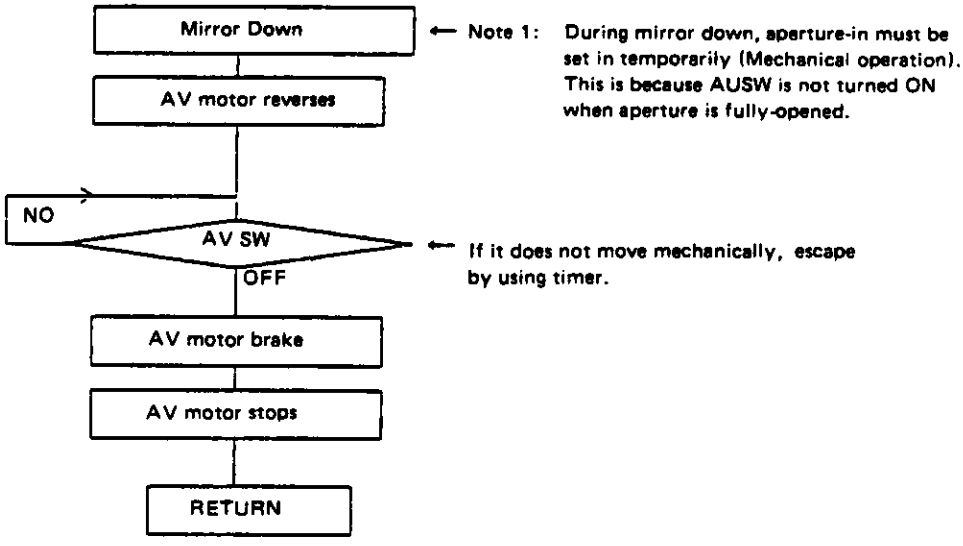

14. Wind up

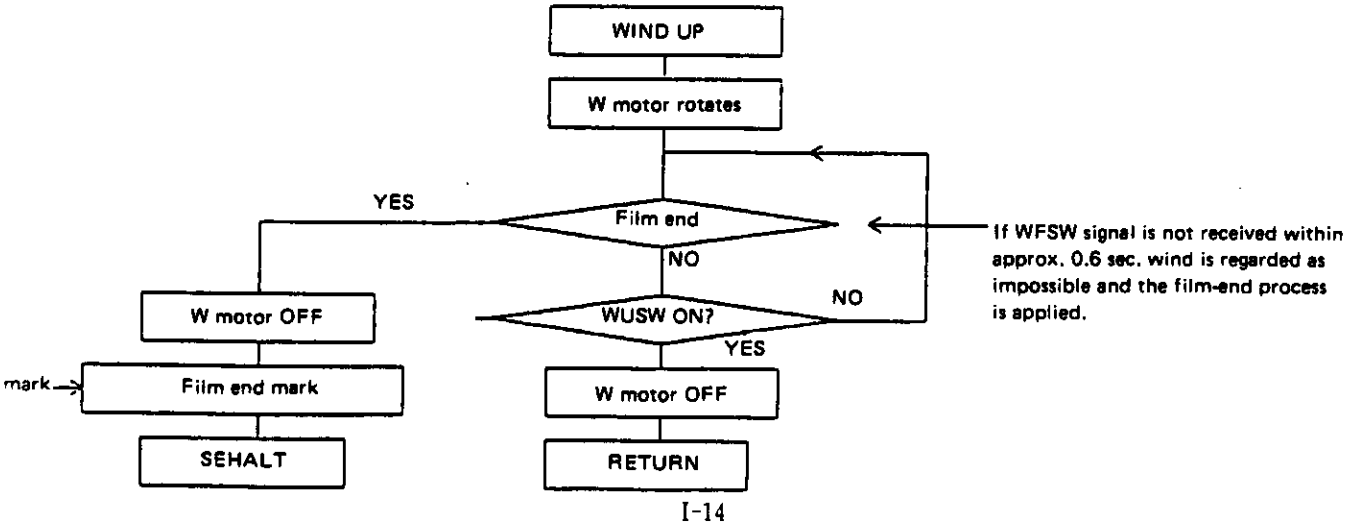

4. Power distribution

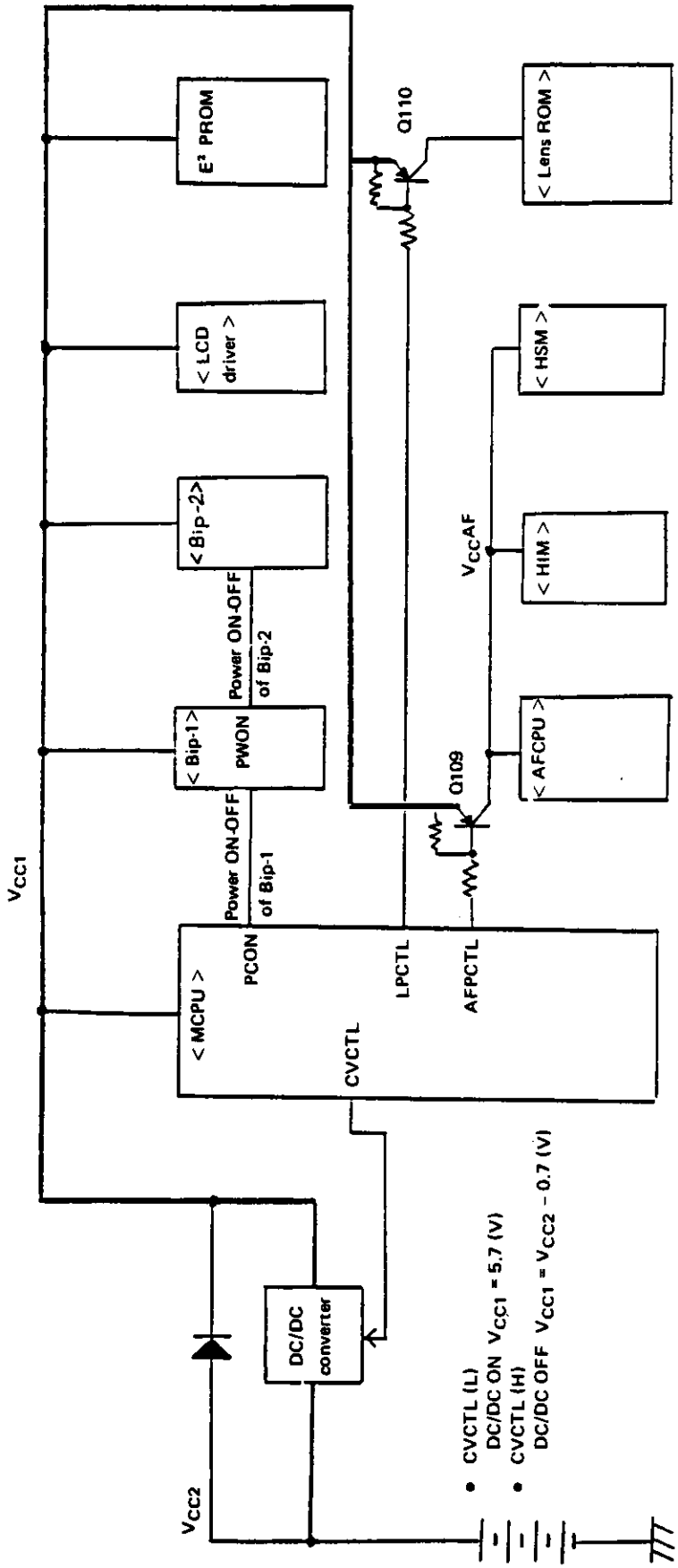

5. Serial communications

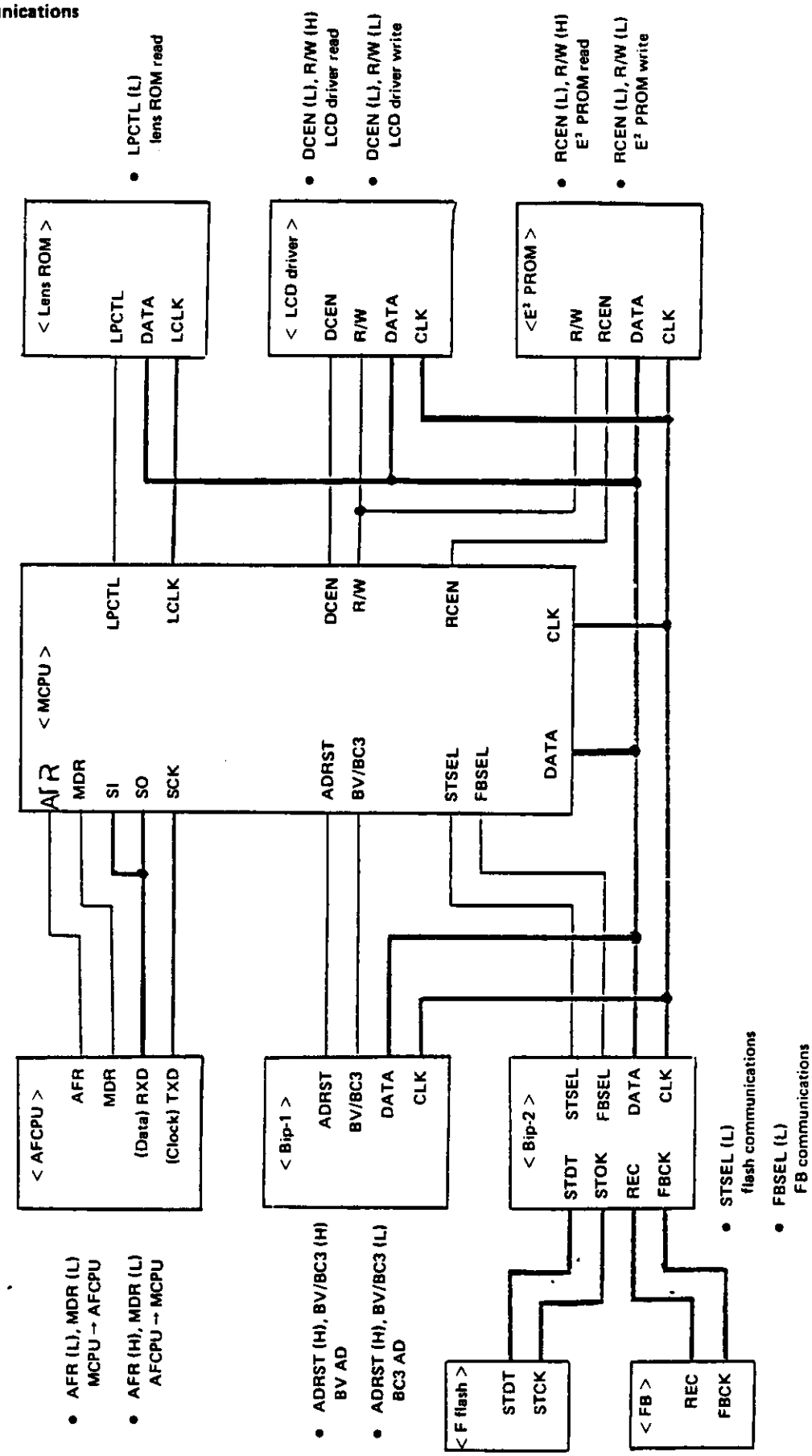

6. Time chart

1 During display

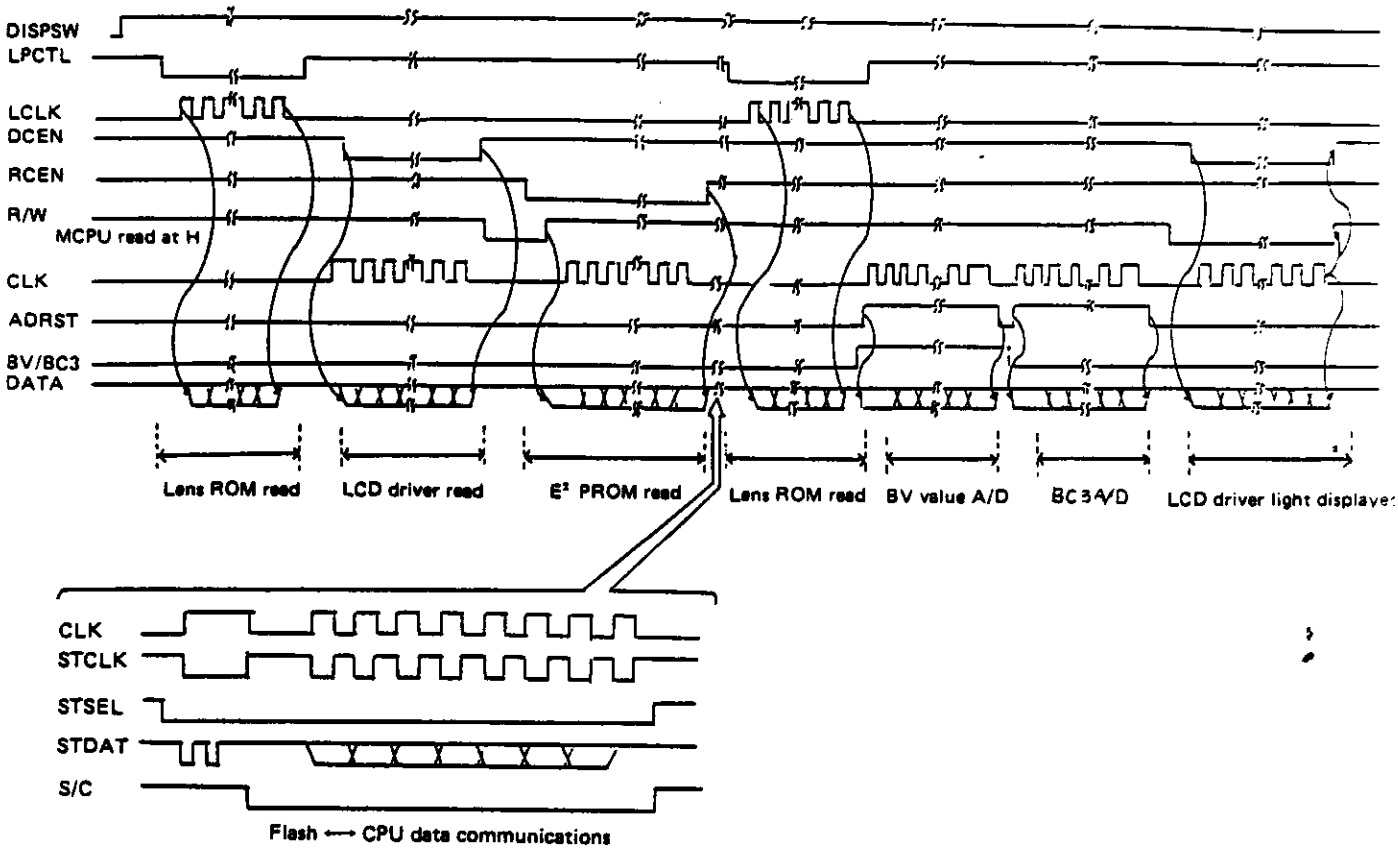

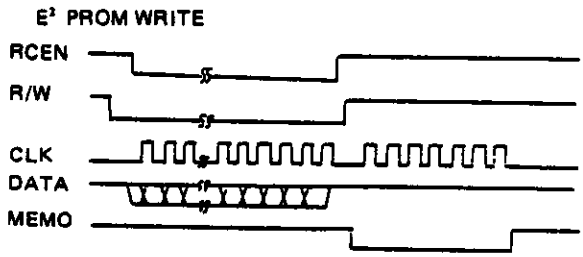

2. AF single mode

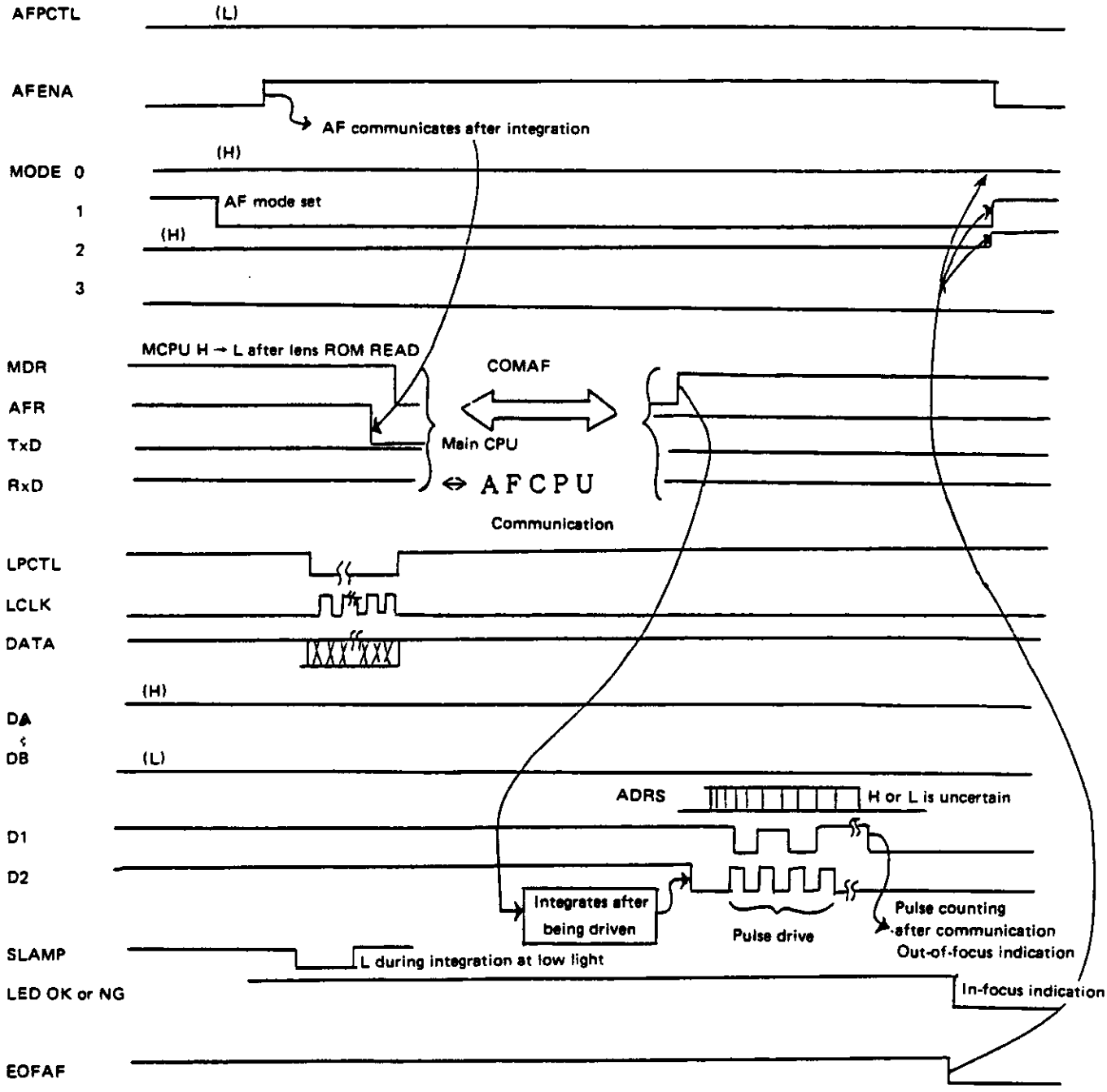

3. TTL direct light measurement → Film winding complete

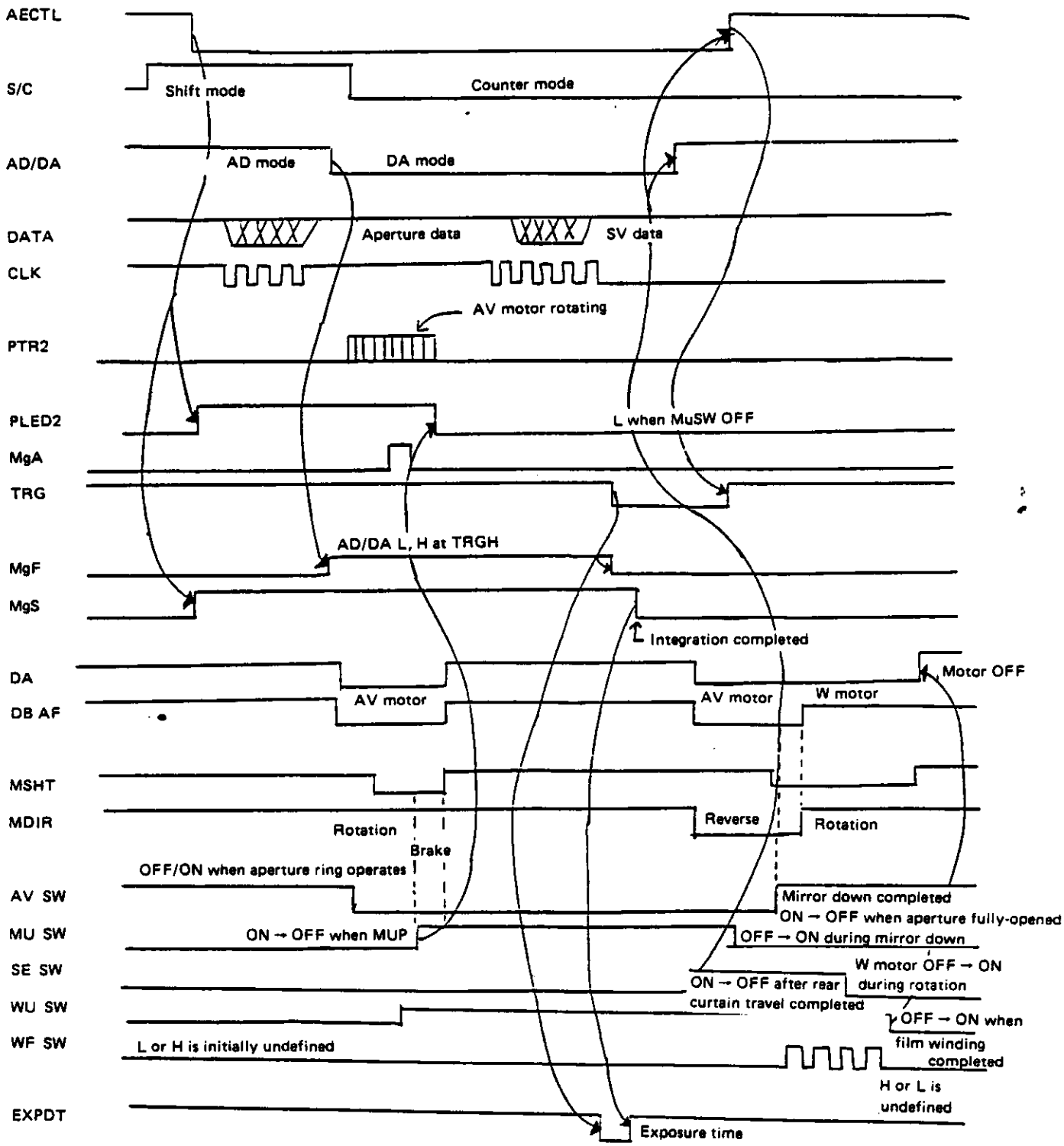

3. DESCRIPTION OF MECHANICAL OPERATION

1. Operation of W motor

Functions of W motor: 1. Shutter charging 2. Film winding 3. Film rewinding

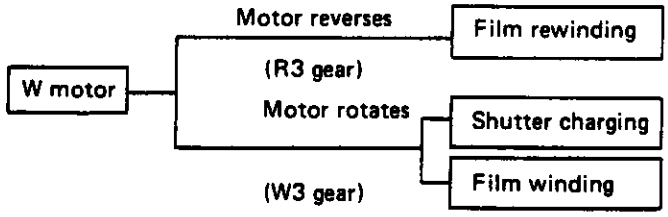

1. Shutter charging and film winding

W motor rotates → 2 gear → W3 gear → 4 cam gear →
W3 gear is shifted by the rotation of the motor and engaged with the 4 cam gear.

Film wind
→ Sprocket gear → 52 gear → 6 gear → Spool gear
Sprocket rotates Spool rotates
→ Shutter charge ····· Refer to the following items

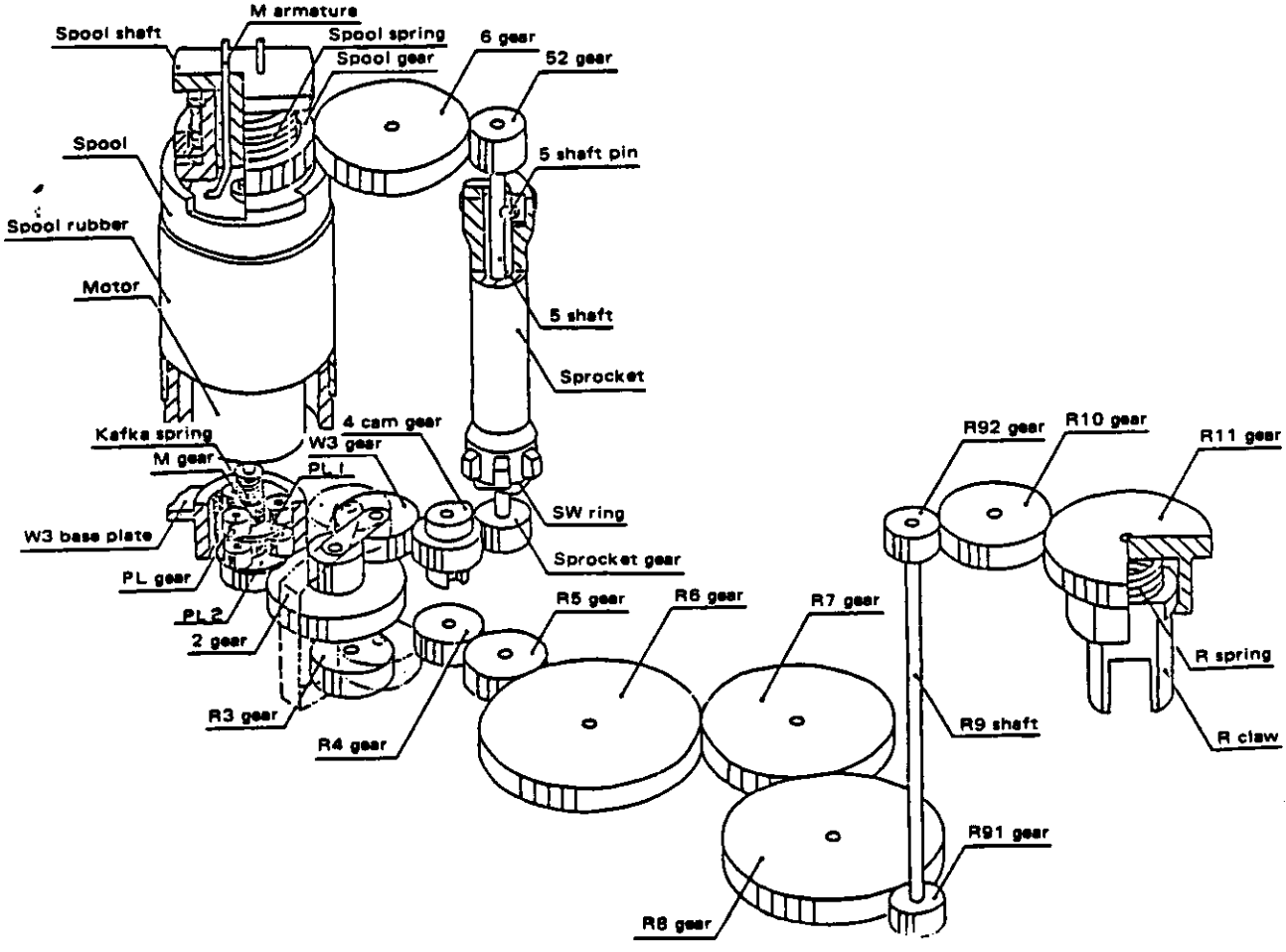

Shutter chr

Shutter charge

4 cam gear ⟶ HS lever → SC base plate → Shutter set (Charge lever)
ZJ703500 ZC610900

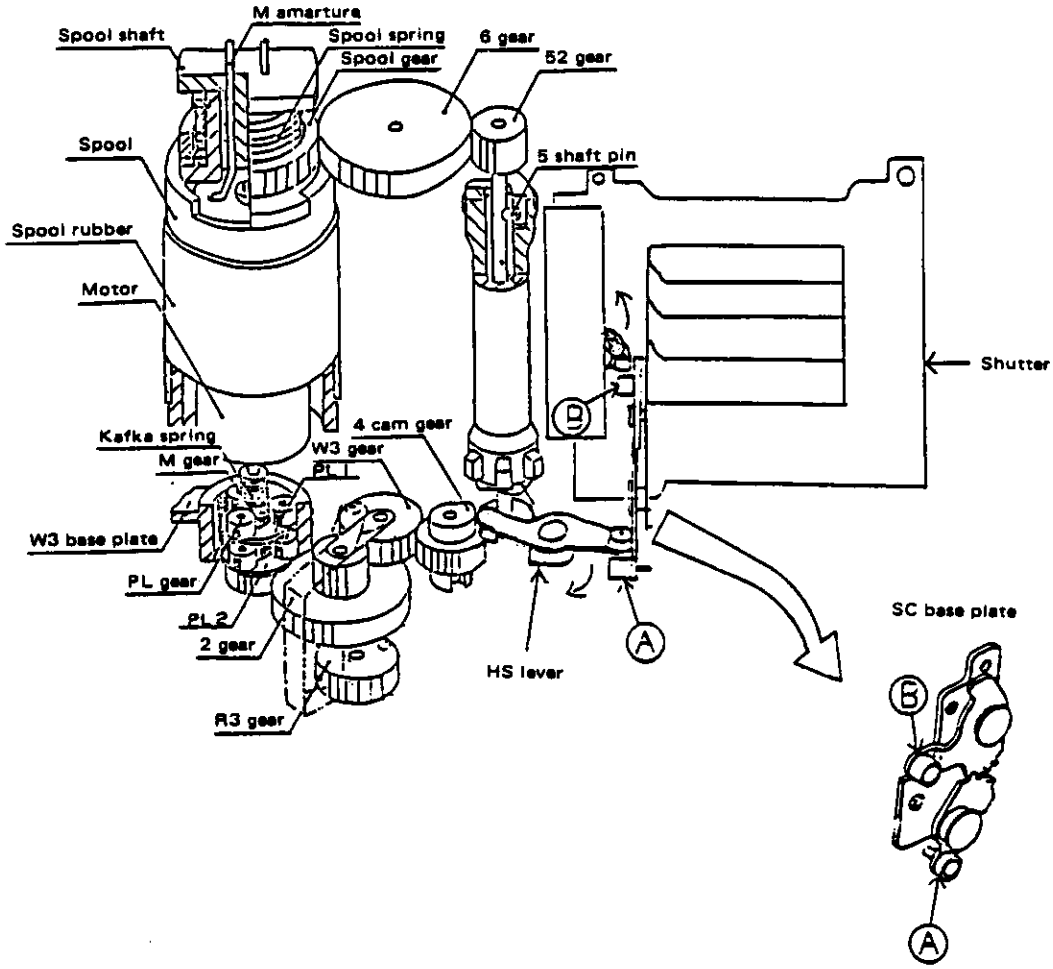

2. Rewind

R3 base plate ZC611900

W motor reverses → 2 gear → R3 gear → R4 gear ~ R8 gear →
R3 gear engages the R4 gear when the W motor reverses
(W3 gear does not normally engage the R4 gear)
→ R91 gear → R92 gear → R10 gear → R11 gear (R claw rotates and film rewinds)

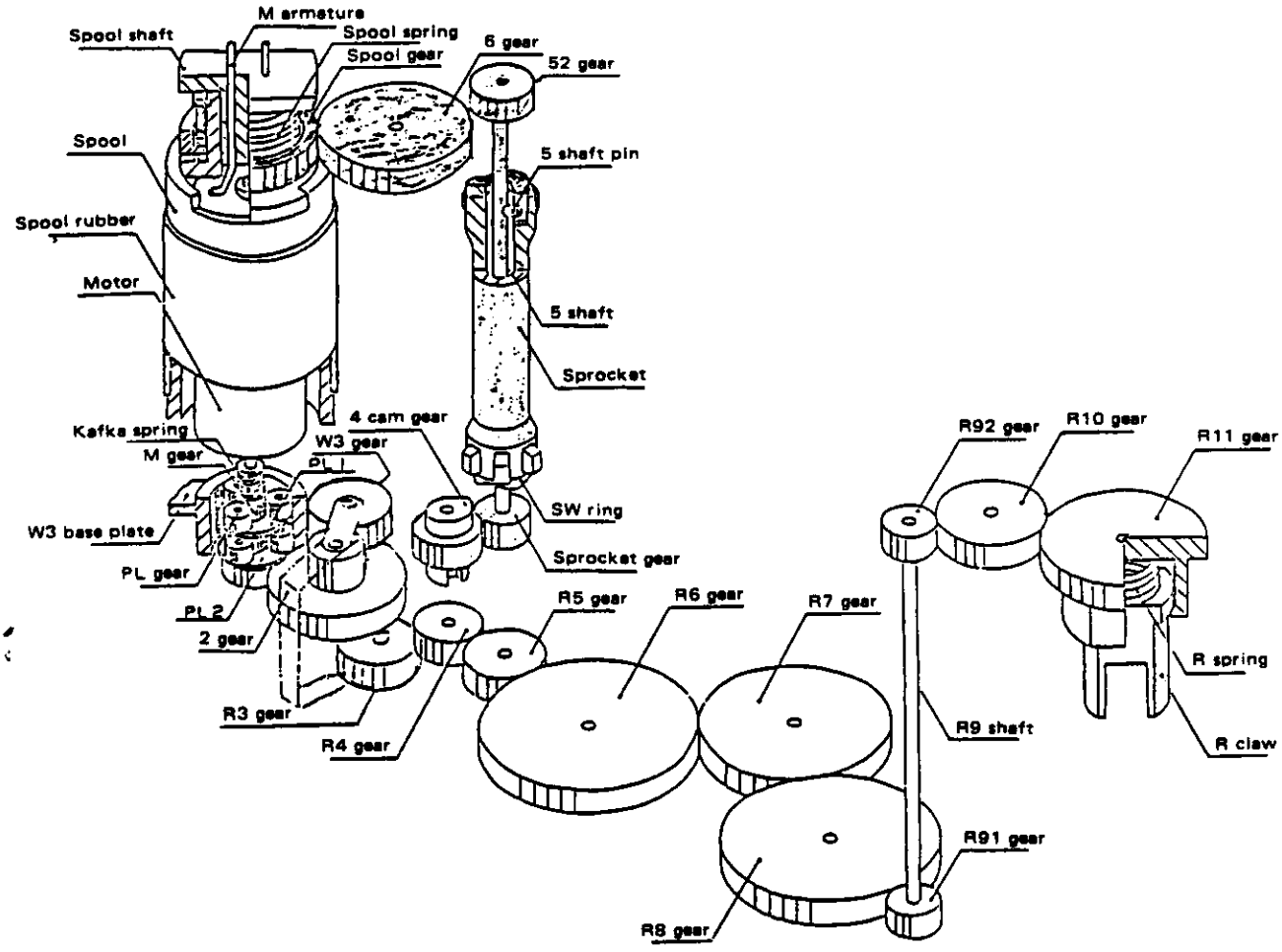

2. Operation of AV motor

Functions of AV motor: 1. Mirror drive 3. Aperture control

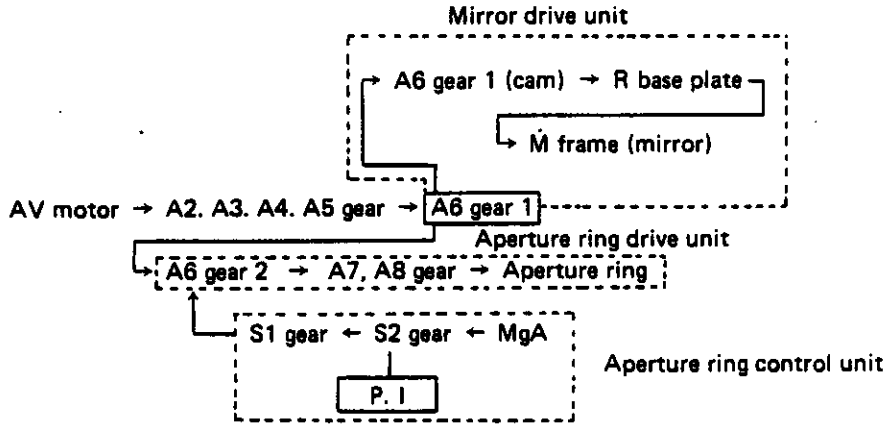

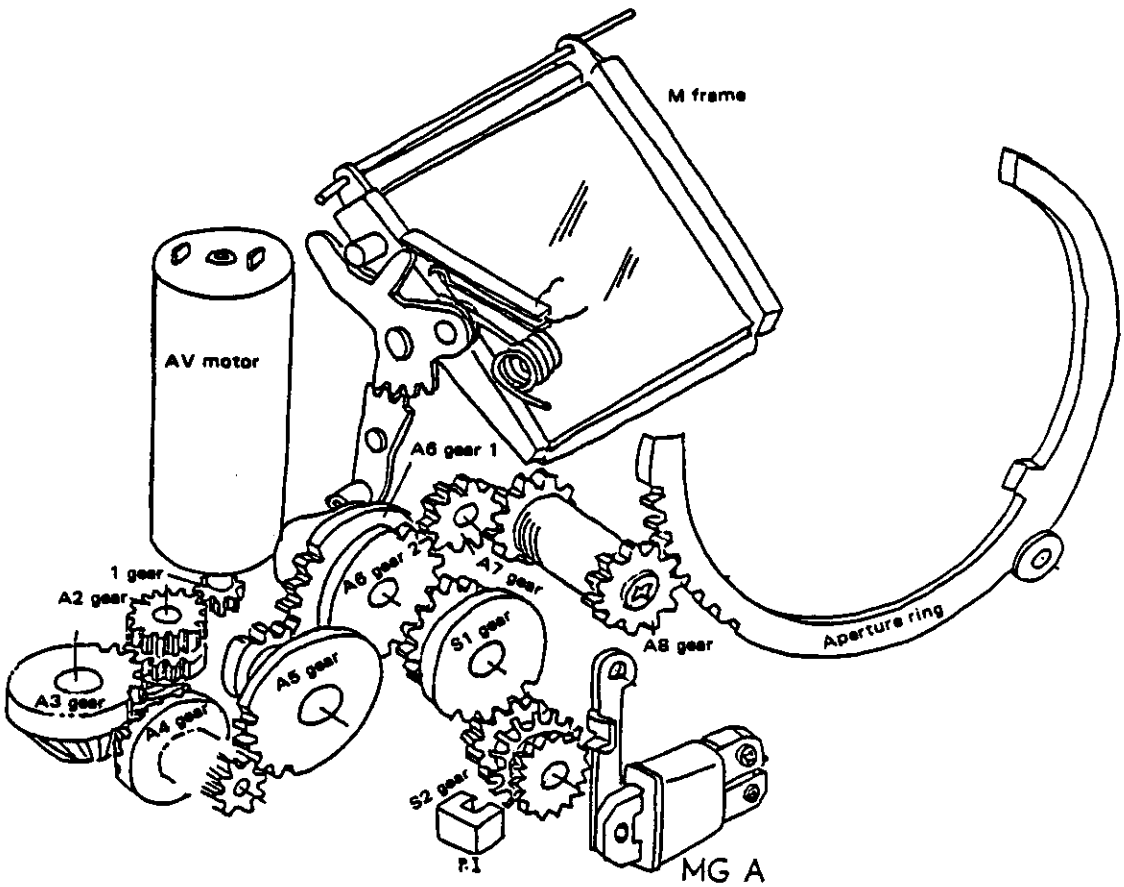

1. Mirror drive
   - Mirror up
     The A6 gear 1 rotates counter clockwise due to the clockwise rotation of the AV motor. As a result, the MU gear 1 attached to the cam unit is activated. This is linked to the cam and raises the mirror.

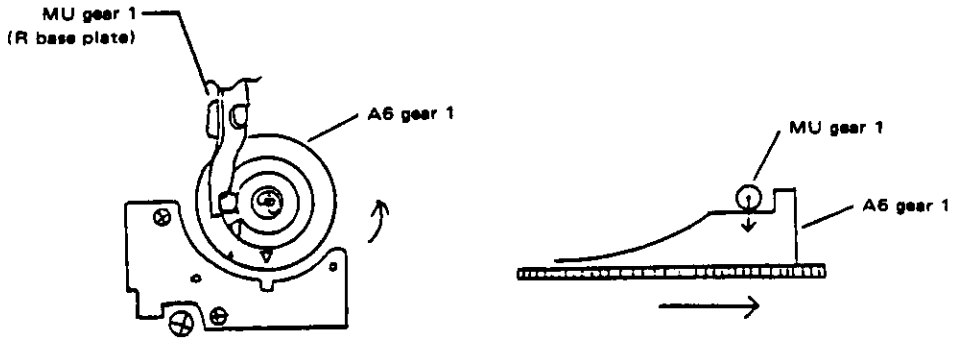

   - Mirror down
     The AV motor reverses, the A6 gear 1 rotates clockwise, the MU gear 1 is pushed up by the cam and mirror is lowered.

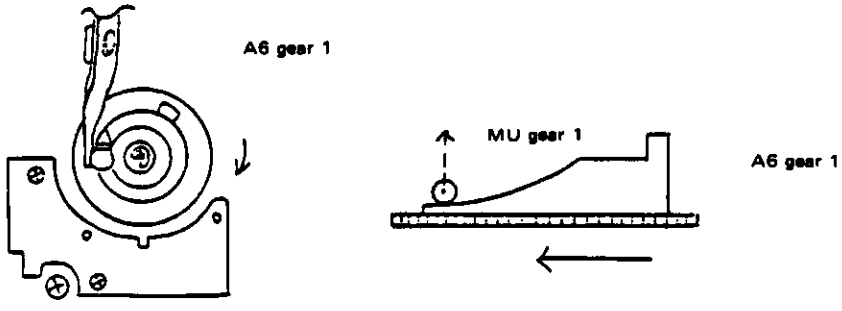

2. Aperture control

- Put in the lens

  A6 gear 1 rotates counter clockwise with the rotation of the AV motor. Then, the A6 gear 2 beneath A6 gear 1 begins to rotate in combination with A6 gear 1 due to the torque of the aperture spring attached to the A8 gear.

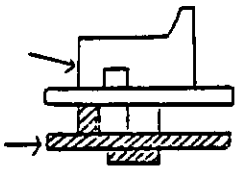

A6 gear 2 → A7. A8 gear → Put in the lens

The rotation of the A6 gear 2 generates a pulse through the slit and P.I in the S2 gear. The aperture value is determined by M CPU, and when the number of pulses has reached some predetermined value, an OFF signal is sent from Bip 2 to MgA to turn MgA OFF.

When MgA is turned OFF, a claw catches the ratchet and stops rotation of the S2 gear. This causes the S1 gear, A6 gear 2, A7 gear, A8 gear and aperture ring to stop. (Set to aperture value decided by M CPU.) ····· (A6 gear 1 continues to rotate until mirror-up is completed.)

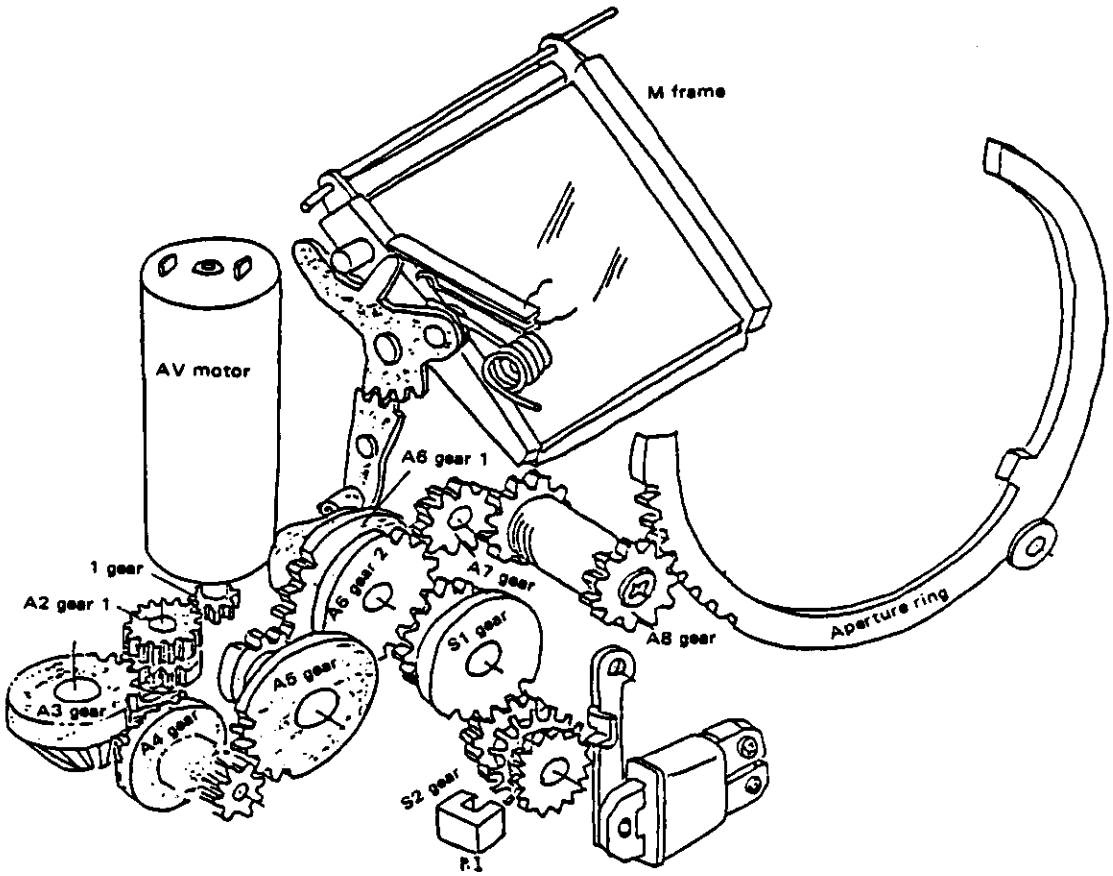

- Aperture set

  To prevent AV SW from turning ON at fully-open aperture, the aperture ring is first reduced to the smallest lens opening before AV SW is turned ON.

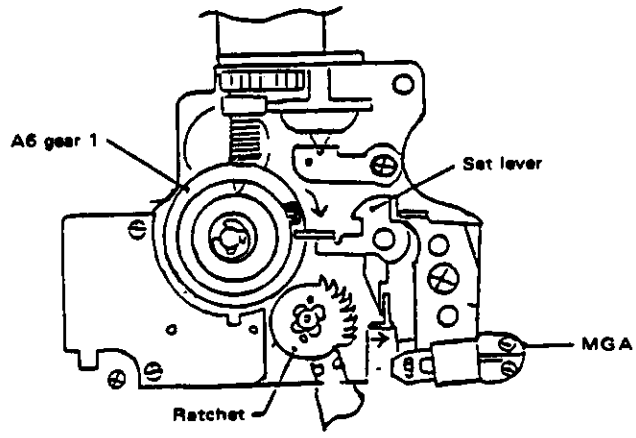

When the AV motor reverses, the convex part of the A6 gear 1 pushes the set lever of MgA and removes the claw which holds the ratchet. The ratchet rotates due to the torque of the aperture spring and the aperture is thus reduced to the smallest lens opening.

Then, the A6 gear 2 is pushed back by the A6 gear 1 and the aperture is set fully-opened.

J. OTHERS

CONTENTS

1. BASIC OPERATION

	Operations	Movements	LCD Panel Information	Viewfinder Information
POWER INPUT	Power switch is OFF			
	Power ON	1. Power is turned ON 2. Battery check (lights for 1.5 sec., For details, refer to 「RESET」) 3. Reset lens to ∞ 4. ISO is displayed Rear cover opens	PROGRAM 100 AF SINGLE 1.5 sec. ISO mark displayed only for	2000 5.6
Film loading	Slide the rear cover O/C knob	Slide the rear cover	PROGRAM 0 AF SINGLE	
	Load film and close the rear cover	Auto-load and advances 4 frames (Frames advancing) (Complete)	PROGRAM 0 AF SINGLE PROGRAM 0 AF SINGLE PROGRAM 1 AF SINGLE	

	Operations	Movements	LCD Panel Information	Viewfinder Information
Film loading		In the event of failure during auto-loading	PROGRAM 0 AF SINGLE mark blinks (Turns ON after 30 sec.)	
		In the event of advancing while film is unloaded (Auto loading)	PROGRAM 0 AF SINGLE	
		(Complete)	PROGRAM 0 AF SINGLE	
		(After 30 sec. has elapsed while display persists)	PROGRAM 0 AF SINGLE	

	Operations	Movements	LCD Panel Information	Viewfinder Information
Filming	Press release button half way	Auto-focusing		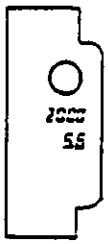 ○ In focus : green ○ Out-of-focus : red
		Exposure display		(Correct) 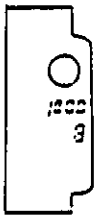 Shutter speed and aperture value turn ON (Over-exposure)  Only 2000 blinks (Under-exposure) 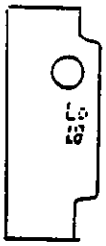 Lo blinks

	Operations	Movements	LCD Panel Information	Viewfinder Information
Filming	Press release button	Shutter released and film is wound automatically	PROGRAM 1 AF SINGLE PROGRAM 1 AF SINGLE PROGRAM 2 AF SINGLE PROGRAM R 36 AF SINGLE R mark blinks	250 KB Display disppears during mirror up
Rewind	Press R button	Rewinds automatically	PROGRAM 36 AF SINGLE PROGRAM 36 AF SINGLE	

	Operations	Movements	LCD Panel Information	Viewfinder Information
Rewind	Press R button 1	Rewinds automatically Complete	PROGRAM 0 AF SINGLE blinks (On after 30 sec.) Turns ON.	
	Slide the rear cover O/C knob	Rear cover is open		
Power focus	Press power focus button	Changes to power focus mode	PROGRAM PF 1 SINGLE PF mark blinks!	250 40 PF
	Operate shift knob	Power focus		200 40 PF blinks Blinks without relation to focusing
Continous mode	Press mode exchange button	Changes to continuous mode	PROGRAM 1 AF CONT	
AE Lock	Watch the view-finder and press AE lock button	Exposure value is locked		500 40
	Point the camera in a different direction	Locked value does not change		500 40

	Operations	Movements	LCD Panel Information	Viewfinder Information
P shift	Operate shift knob	Program diagram is shifted	PROGRAM AF SINGLE PROGRAM blinks	125 80
x F4 mode	Press x (F-4) made button	Shutter is set to 1/100 and aperture to F4	1/2 AF SINGLE F4 mark flashes	100 40 100 4.0 blinks
Reset	Press reset button	(When button is pressed) 1. Mode returns to normal 2. Lens is reset to ∞ (While button is held pressed) 1. ISO is displayed 2. battery is checked	PROGRAM ISO 100 AF SINGLE PROGRAM ISO 100 AF SINGLE mark blinks PROGRAM ISO 100 AF SINGLE mark ON low battery battery exhausted	
OM Lens mounting	Mount OM lens:	aperture-preferred is possible	SINGLE CONT. possible	All information other than about the flash disappears from the viewfinder

	Operations	Movements	LCD Panel Information	Viewfinder Information
Auto battery check	Release shutter	Battery is checked automatically each time (battery full) (battery weak) (battery empty)	PROGRAM AF SINGLE PROGRAM blinks AF SINGLE PROGRAM ON AF SINGLE	
Selftimer	Press self-timer button	Changes to self-timer mode	PROGRAM AF SINGLE	
	Press release button	1. AF is activated 2. 12 sec. 3. Release	PROGRAM AF SINGLE mark blinks	F display disappears
Flat lighting flash	Switch on the flash	Recharge completed		
		Enter flat lighting range		

	Operations	Movements	LCD Panel Information	Viewfinder Information
Flat lighting flash	Shoot film	Flash fires		Blinks for 2 sec.
Grip flash	Flash pops-up	Charge completed		
	Shoot film	Aperture is controlled by distance information Shutter is released and flash fires		Blinks : correct OFF : under exposure ON : flash does not fire
T-series flash	Switch on the flash	Charge completes		
	Shoot film	Shutter is released and flash fires		Blinks : correct OFF : under exposure ON : flash does not fire

2. PROGRAM LINE DIAGRAM

1. Normal Program Diagram

(1) Changes depending on F No. at fully-open aperture.

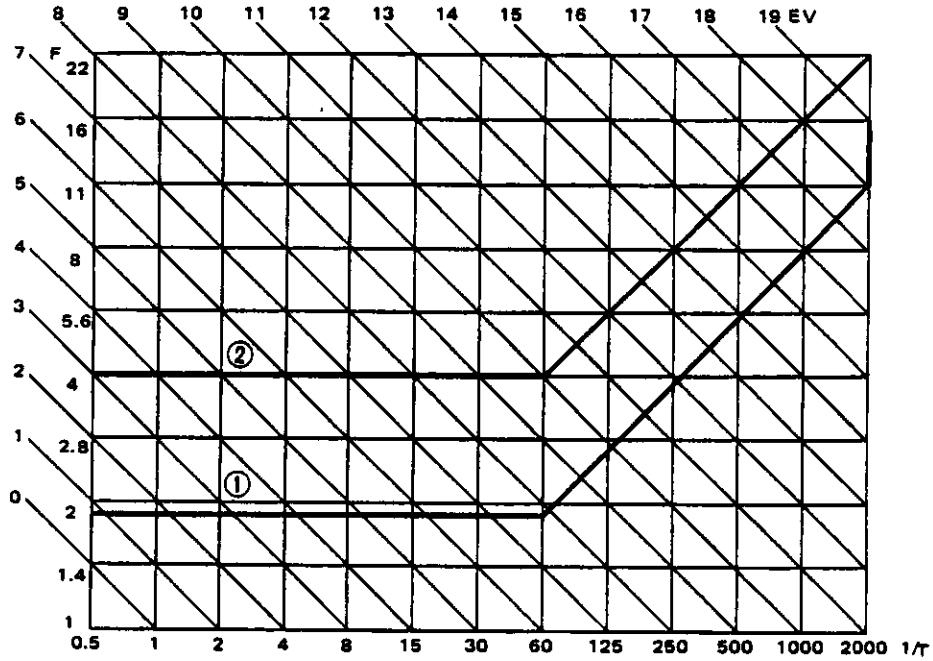

Example
1. 50 mm F1.8
2. 35 to 70 mm F4

Positions of the horizontal lines change depending on F No. The turning point does not change.

(2) Changes depending on focal length.

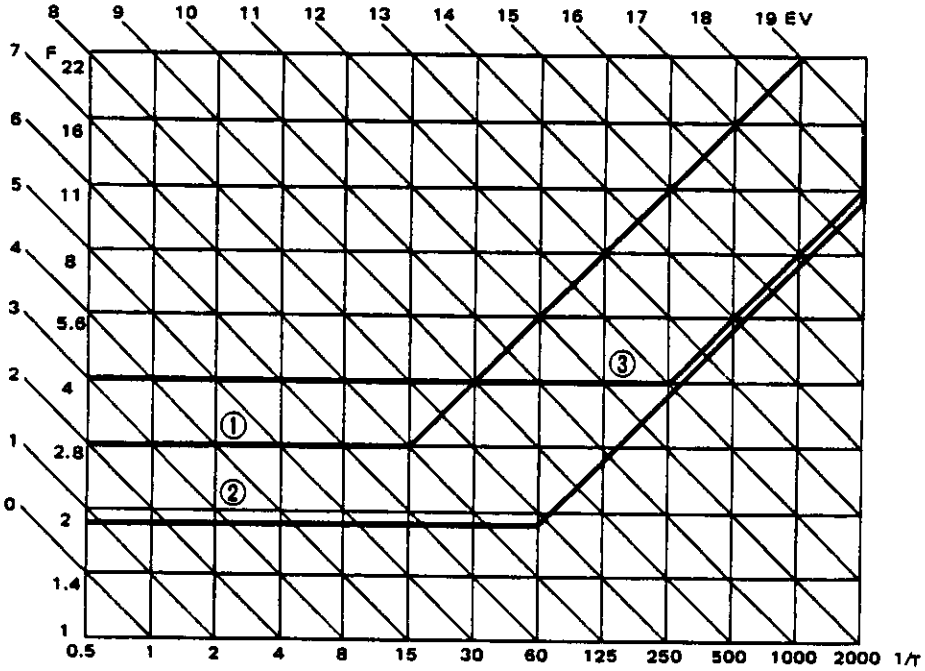

Example
1. 28 mm F2.8
2. 50 mm F1.8
3. 70 to 210 mm
   210 mm at F4

Distinction	Focal length	Break point
W	Under 34 mm	1/15
S	Over 34 mm Under 90 mm	1/60
T	Over 90 mm	1/250

Break point changes depending on the focal length

2. Program Shift Diagram

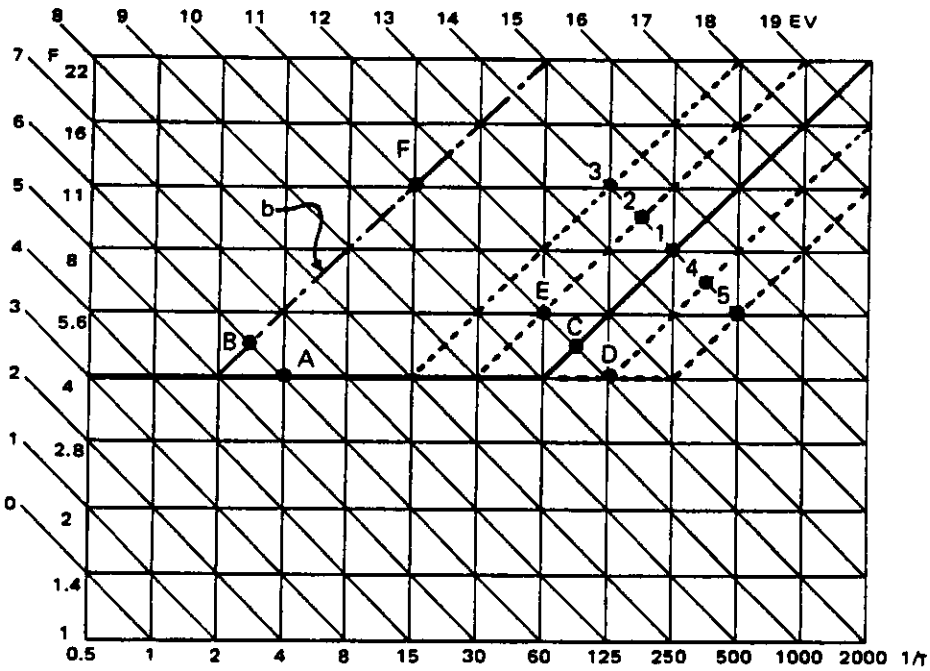

Example
35 to 70 mm F4

(1) At point 1, when shifting to the (+) side, the turning point changes from 1 → 2 → 3.
Then, when shifting to the (−) side, the turning point changes from 3 → 2 → 1 → 4 → 5.

(2) At point A, when shifting to the (+) side, the turning point changes from A → B. The following changes in brightness follow line b.

(3) At point A, when shifting to the (−) side, no change occurs.

(4) At point C, when shifting to the (−) side, the turning point changes from C → D. Here, when shifting towards the dark side, the turning point changes from D → A. Moreover, when shifting to the bright side, the turning point changes from A → D.

(5) In 3., at point A, when shifting to the (+) side, the turning point changes from A → B.
However, if the shift is to the bright side, the turning point changes from B → F. (rather than returning to D).

3. Grip Flash Program Diagram

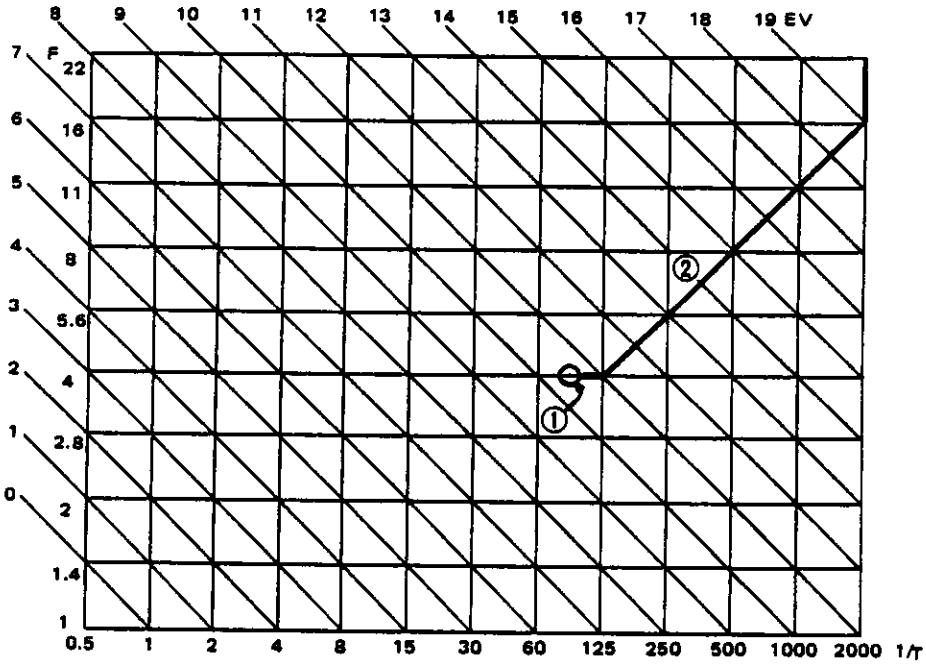

Example
35 to 70 mm F4

(1) This shows the lighting range. When it is below 1/100, under natural sunlight, the shutter speed is set to 1/100 and the aperture is determined by the distance. (Flashmatic)

$$\text{Aperture} = \frac{\text{G No.}}{\text{Distance}}$$

(2) This shows the no-lighting range.

4. T-Series Flash Program Diagram

The program is the same as for the grip flash. However, in lighting range 1., the shutter speed is set to 1/100 and the aperture is controlled by the smaller value between F4 and the F value at fully-open aperture.
Example: 50 mm F1.8 is F4, 35 to 70 mm F4.5 is F4.5

5. Flat Lighting Flash Program Diagram

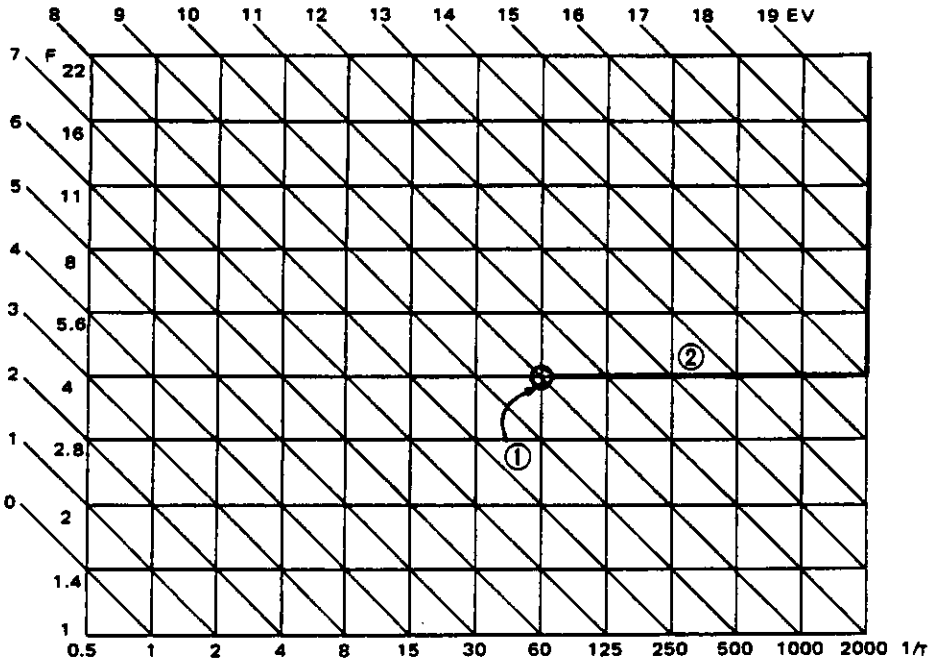

(1) This shows the lighting range. When it is below 1/60 under natural sunlight, the shutter speed is set to 1/60, and the aperture is controlled by the smaller value between F4 and the F value at full-open aperture.

(2) This shows the flat lighting range. When it is above 1/60 under natural sunlight, the shutter speed is determined by natural sunlight. The aperture is controlled by the smaller value between F4 and the F value at fully-open aperture. If it reaches 1/2000, the smallest lens opening is reached.

*When the viewfinder information shows a shutter speed of 100, both light and super FP can be used.

3. COMBINATION TABLE OF OM 707 AND FLASH

MODE	AGP12	F280	T20 T32	Shutter speed determined by flash program	Shutter speed conditions	Exposure control			Flash control					Aperture		Shutter	
									X contact								
						EA	EB		Grip X	Shoe X		Front curtain operation starts	Rear curtain operation is completed	Control	Indication	Control	Indication
A						H	H	TTL direct 2 to 1/2000	OFF	Full speed ON	Flash by other makers full speed flashes		O	Program line	→	→	→
B	O			1/100	Faster than 1/100	H	L	TTL direct 1/100 to 1/2000	OFF	OFF	AGP12 does not flash			Program line	→	→	→
					Slower than 1/100	H	L	1/100 limiter	ON	ON	AGP12 flashes		O	G No. / dostamce	→	1/100	1/100
C		O		1/60	Faster than 1/60	L	L	TTL direct 1/60 to 1/2000	OFF	OFF	F280 flashes (Super FP flashes)	O		Program line	→	→	→
					Slower than 1/60	H	L	1/100 limiter	ON	ON	F280 flashes (Lighting flash)		O	Values at aperture full-open or F4	→	1/100	1/100
D			O	1/100	Faster than 1/100	H	L	TTL direct 1/100 to 1/2000	OFF	OFF	T-flash does not fire			Program line	→	→	→
					Slower than 1/100	H	L	1/100 limiter	ON	ON	T-flash fire		O	Values at aperture full-open or F4	→	1/100	1/100
E	O	O		1/60	Faster than 1/60	L	L	TTL direct 1/125 to 1/2000	OFF	OFF	F280 flashes (Super FP flashes)	O		Program line	→	→	→
					Slower than 1/60	H	L	1/100 limiter	ON	ON	AGP12, F280 flashes (Lighting flash)		O	G No. / distance	→	1/100	1/100
F (same as B)	O		O	1/100	Faster than 1/100	H	L	TTL direct 1/100 to 1/2000	OFF	OFF	AGP12, T-flash does not fire			Program line	→	→	→
					Slower than 1/100	H	L	1/100 limiter	ON	ON	AGP12, T-flash fires		O	G No. / distance	→	1/100	1/100
G(A and X/F4 mode)						L	H	AE lock 1/100	OFF	ON	Flash by other makers flashes at 1/100		O	Values at aperture full-open or F4	→	1/100	1/100

*T-series flash cannot be used for multi-flash filming.

POWER FLASH GRIP300

INDEX

A

PRODUCT OUTLINE

A. PRODUCT OUTLINE

1. Product Outline

Model name	OLYMPUS POWER FLASH GRIP 300
House code	AGP12

2. Main Specifications

Type	Separable power-source grip (built-in flash)
System application	OM 707 (or OM 77 AF)
Shutter release	Electromagnetic shutter
Battery life	Sufficient for 8 rolls or more (using flash for 50% of exposures, alkaline batteries, normal temperature, 24EX film)
Camera mount	Special mount
Electrical connection with camera	Cordless, direct-contact
Guide number	12 (ISO 100 · m)
Flash mode	Full-speed synchro. (Flashmatic)
Coverage angle	Equivalent to view angle of 35mm lens.
Recycling time	4 sec. with sum-4 alkaline batteries.
Operation display	Lamp indication on the back of FLASH (Charge completion) LCD display in viewfinder of OM 707 or OM 77 AF (Charge completion, correct exposure)
Flash duration	1/3000 sec.
Flash power-source switch	ON : pop-up lever (turns ON only when connected with camera) OFF : flash reflector pushed in
Power source	sum-4 alkaline battery x 4
Facing	Elastic pad
Dimensions	49 (W) x 64 (H) x 67 (D) mm
Weight	80g (without batteries)

B

INSPECTION STANDARDS

B. INSPECTION STANDARD

Major Check Point	Standard	Items to be checked and procedure
1. Insulation resistance	over 30M Use 500V insulation resistor	Measure the insulating resistance between the battery armature and the external metal case of the Body.
2. Lighting tendency	The flash covers a film angle subtended by a 35mm lens	The angle between the center of the beam through the point where the intensity is reduced by 1 EV must be greater than: 38° (up-to-down) 54° (left-to-right)
3. Guide number	G. No. 12 (ISO 100)	Compared with G. No. 12, the flash intensity 30 sec. after the charge lamp turns ON is within ± 0.75 EV Compared with G. No. 12, the flash intensity immediately after charge lamp turns ON is within – 1.2 EV
4. Lighting cycles	Over 120 flashes with sum-4 alkaline battery x 4	Flash repeatedly in 30 sec. intervals until flash is not recharged within 30 sec. (Film winding is in operation, but autofocusing not)
5. Recycling time	Within 5 sec. with sum-4 alkaline battery x 4	Flash 3 times immediately after flash is recharged and take the shortest interval time as data.
6. Color temperature	5800° K	

I

DESCRIPTION OF MECHANISM

I. DESCRIPTION OF MECHANISM

Prerequisite

1. Both S101 and S102 are switches linked with UP and DOWN in the Flash firing unit.
   When the flash firing unit is UP : S101 ON, S102 OFF
   When the flash firing unit is DOWN : S101 OFF, S102 ON

2. The CHG terminal voltage will fall to near GND level if a charge permit signal is output from the camera.

3. Positive voltage is applied to the GRX terminal when XSW of the camera is turned ON.

1. Voltage Buildup Circuit (DC/DC converter)

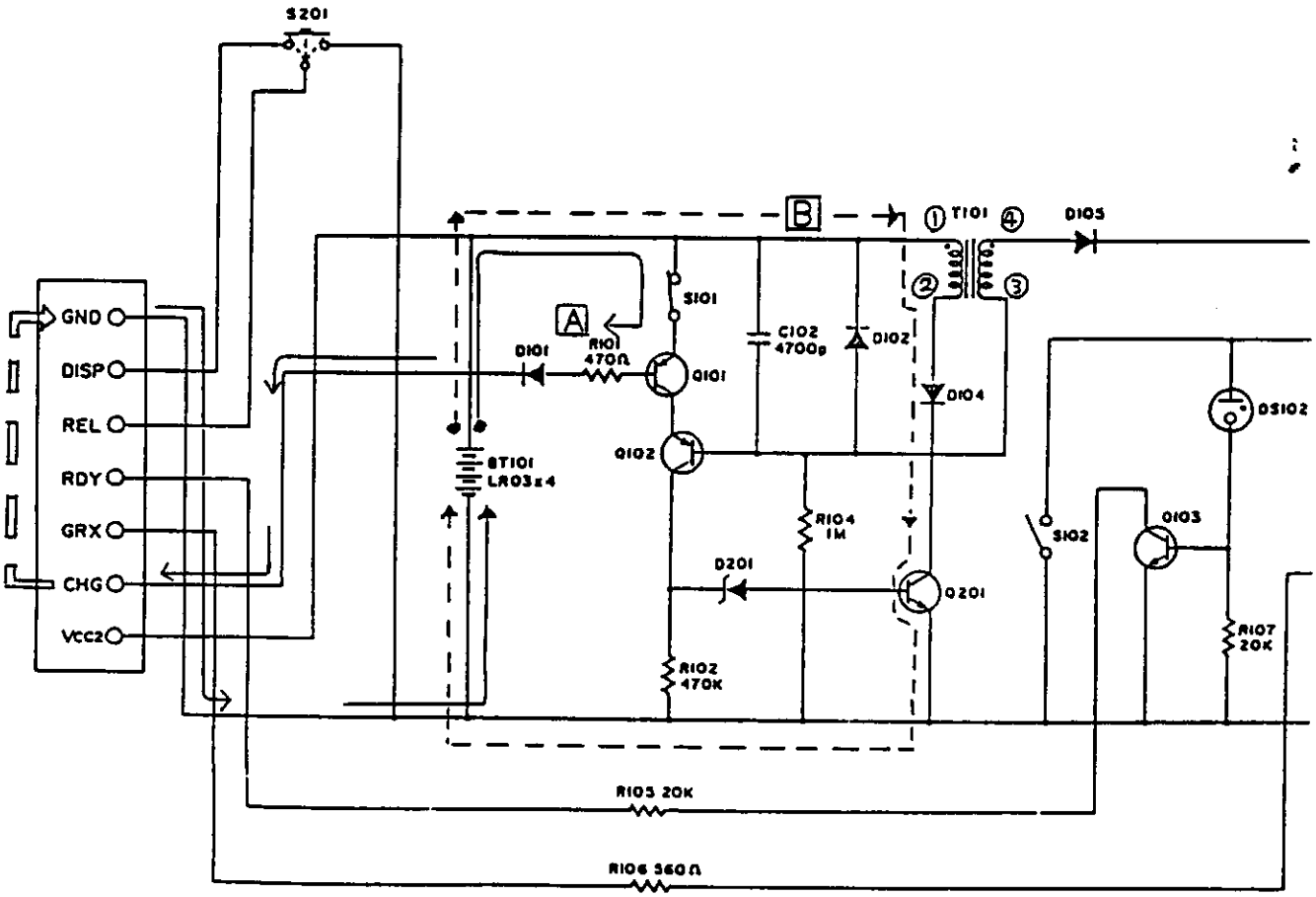

1. When the permit signal is input to the CHG terminal while S101 is ON
   BT101⊕→ S101 →⊖101E → –101B → R101 → D101 → CHG → GND → BT101⊖. . . . . A
   As a result, Q101 is turned ON..

2. If Q101 turns ON, Q102 and Q201 are also turned ON.

3. If Q201 turns ON, current flows as below:
   BT101⊕→ T101 ① → T101 ② → D104 → Q201C → Q201E → BT101⊖
   (T101 primary current)

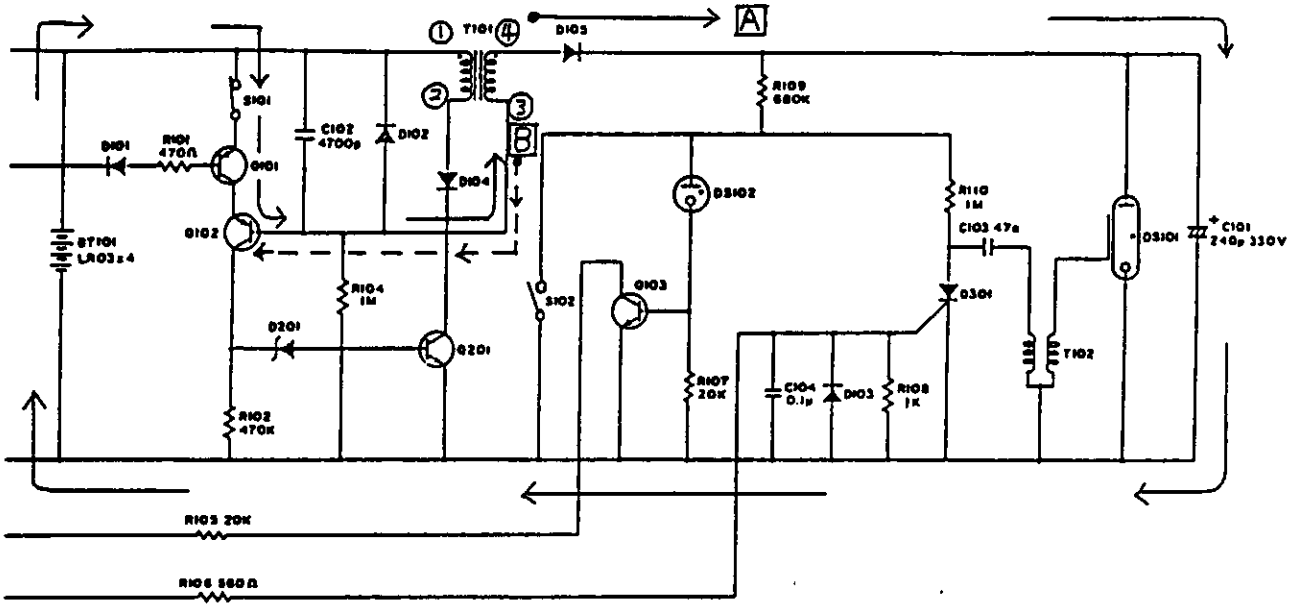

4. Secondary voltage is generated in proportion to the increment ratio of the primary current, and current flows as below:
   T101 ④ → D105 → C101 → BT101⊖→ BT101 →⊕S101 → Q101E → Q101C → Q102E → Q102B → T101 ③ ..... A
   As a result, the main capacitor C101 is charged.

5. When the current increment becomes 0 because of saturation of the primary current, the secondary current stops. Because the base current of Q102 is reduced, the primary current in T101 decreases rapidly.
   This decrease generates a reverse voltage in the secondary circuit of T101, and the reverse voltage is applied to the base of Q102 turns OFF ..... B

6. If Q102 turns OFF, Q201 also turns OFF and the primary current stops. This causes a release of the reverse voltage stored in the secondary circuit.

7. By releasing the reverse voltage, T101 primary current begins to flow and charges C101 again. C101 is thus charged by turning ON and OFF repeatedly the primary circuit of T101.

Energy-Saver-Circuit

When the battery falls voltage below the Zener voltage (approx. 2.2V) applied to D201, the base current of Q201 decreases to prevent a voltage drop to the battery by controlling DC/DC operation.

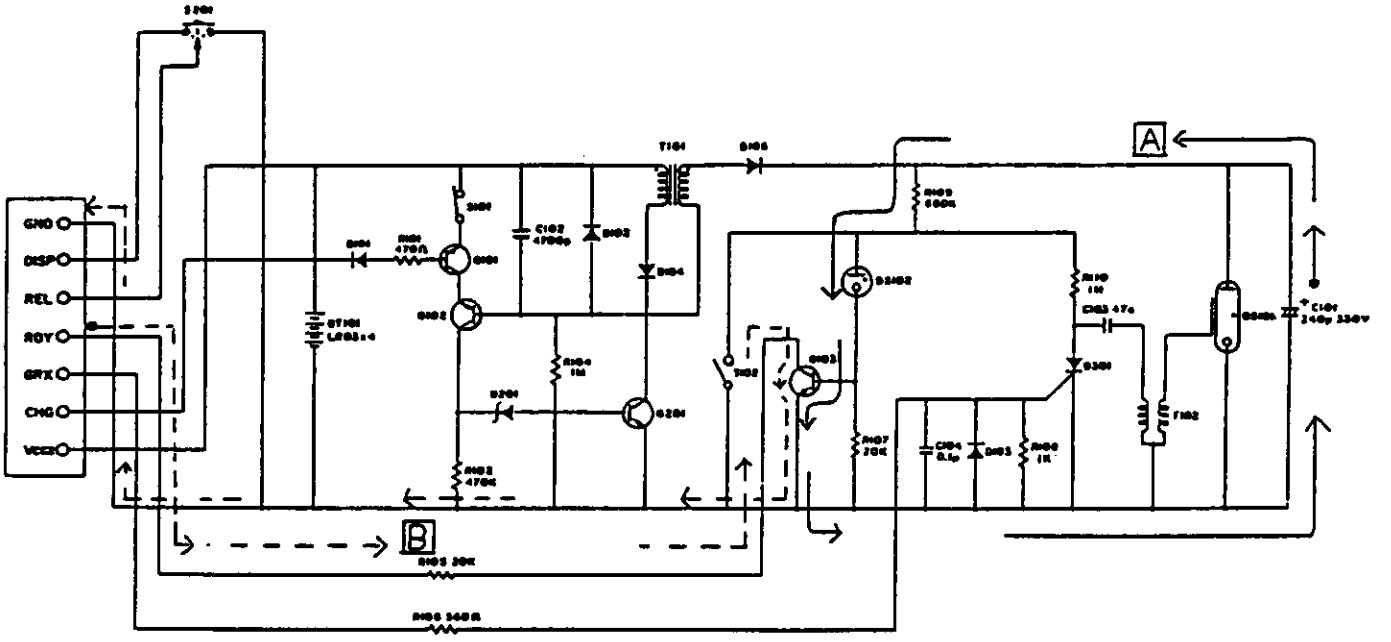

2. Charge Complete Display, Flash-Charge Information Circuit

1. DS102 lights up when the charging voltage of C101 reaches the lighting voltage of DS102.

2. After DS102 lights up, current flows as below.
   C101 → R109 → DS102 → Q103E → C101 ..... [A]
   As a result, Q103 is turned ON.

3. When Q103 is turned ON, the voltage of the RDY terminal falls to the GND level through R105 and Q103 and indicates that charging is completed.
   RDY terminal R105 → Q103C → Q103E → GND ..... [B]
   (camera) (camera)

- If the flash firing unit is pushed and held while DS102 is lighting (i.e. S101 OFF, S102 ON), (+) of DS102 is short-circuited to GND and DS102 turns OFF because S102 is ON. Consequently, A103 turns OFF and the RDY terminal becomes open. As a result, signal current does not flow to camera.

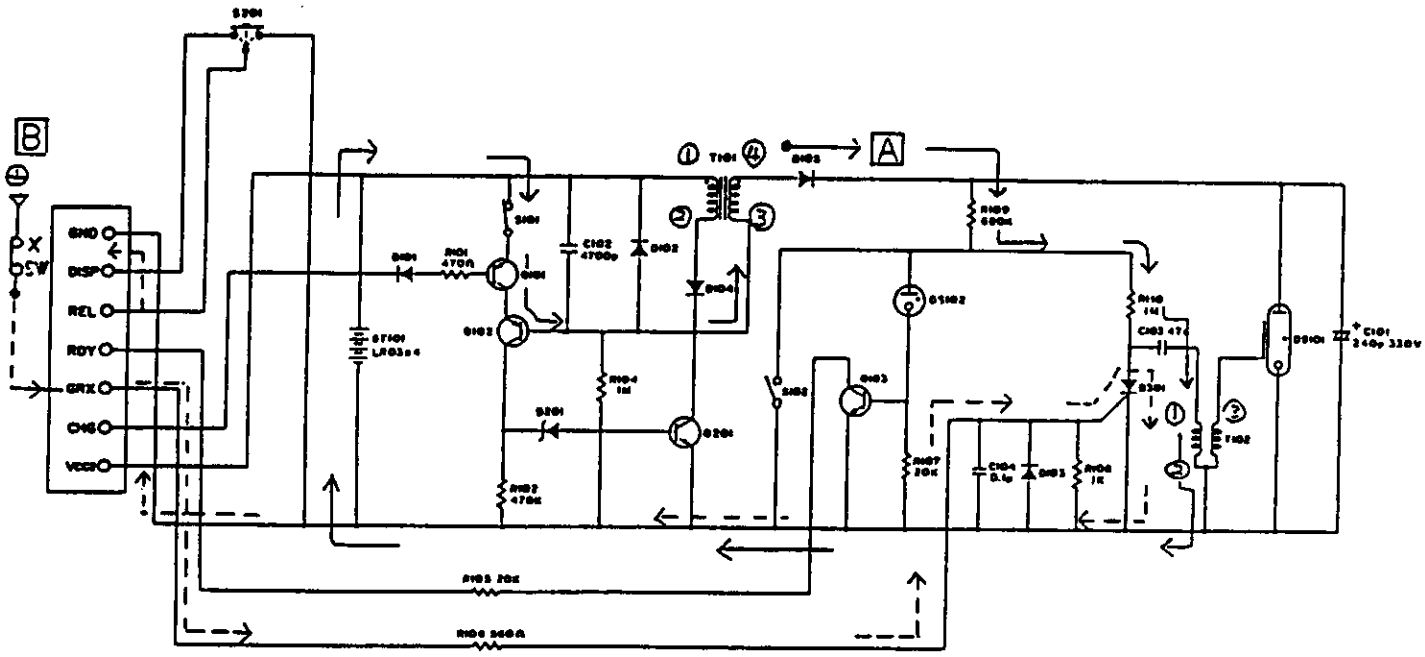

3. Flash Trigger Circuit

1. During DC/DC operation, both the main capacitor C101 and trigger capacitor C103 are charged.
   T101 ④ → R109 → R110 → C103 → T102 ① → T102 ② →BT101 → S101 →Q101 → Q102 → T101 ③ (during operation of DC/DC) ..... [A]
   or
   C101 → R109 → R110 → C103 → T102 ① → C101 (DC/DC is not in operation)

2. When XSW turns ON, voltage is applied to the GRX terminal and thyristor D301 turns ON.
   Power Source → XSW → GRX terminal → R106 → D301 gate → D301 cathode → GND → Power Source ..... [B]

- When used together with the camera, the flash does not fire if the charge complete display is not shown because the flash signal is not output.

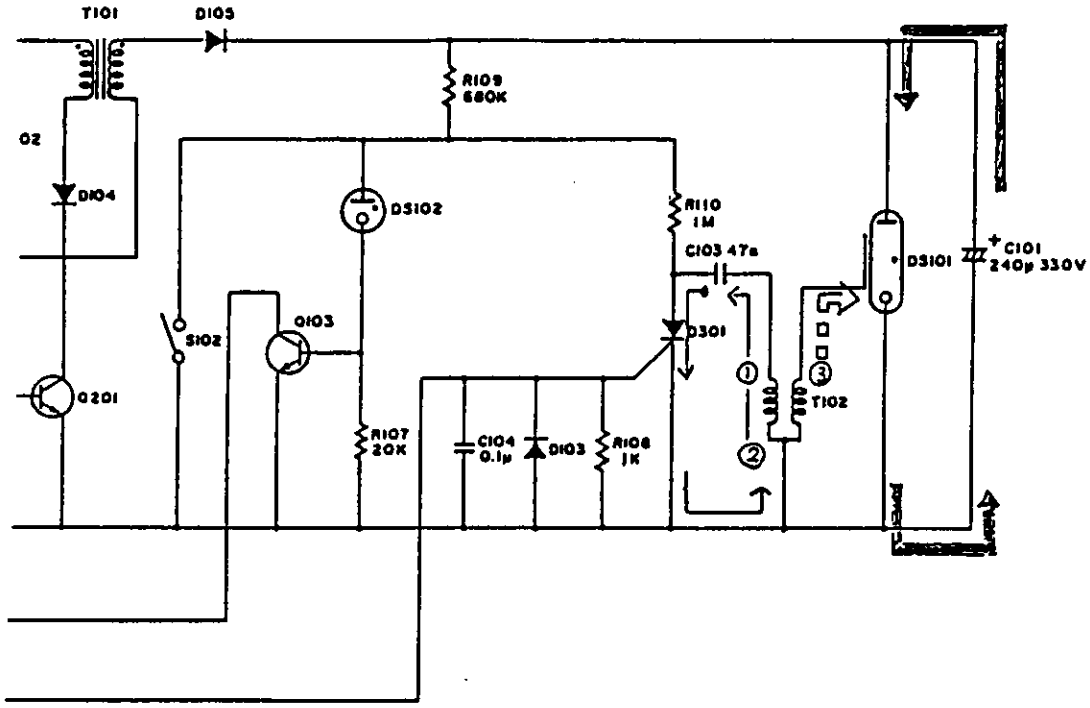

3. When D301 turns ON, current flows from C103 to the primary circuit of the trigger transformer T102 and high voltage is generated in the secondary circuit of T102. This causes the flash tube to light.
   C103 → D301 anode → D301 cathode →T102 ② → T102 ① → C103

4. Description of electrical parts

R102	Prevents Q201 from turning ON due to noise
R107	Prevents Q103 from turning ON due to noise
R108	Prevents spontaneous firing due to noise
C102	Prevents destruction of Q102
C104	Prevents spontaneous firing due to noise
D101	Protects circuits in camera body
D102	Prevents destruction of Q102
D103	Protects circuits in camera body
R201	Prevents extreme voltage drop of Vcc_2

OLYMPUS

OM707
OM77AF
TROUBLE SHOOTING

OLYMPUS OPTICAL CO., LTD.

PRINTED IN JAPAN
Oct. 1987 160. AB

NOTICE ON TROUBLE SHOOTING
BY USING THIS MANUAL

1. In this manual, measure for finding defective state and cause is described in order of operation. Practice according as the flowchart, and try to find cause at the defective state which is found on the first checking.
2. A digital multi-tester should be used for checking.
3. Beware of static electricity by setting earth etc., in operation.
4. There are 3 types of M circuit board (ZJ7090). The other parts concerning M circuit board is required to replace with new parts sometimes. In this case, refer to this manual.
5. When M circuit board (ZJ7090) or DX circuit board (ZC6122) is replaced with new one, adjustment of voltage for indication, EE and battery checking is required. Refer to this manual conerning checking method.
6. When AF circuit board (ZC6113) is replaced with new one, adjustment of AF is required. Refer to this manual conerning checking method.
7. Take care not to mistake about polarity of the tester, when voltage, current and resistance is measured.
8. Defective state described here is not all. If new defective states or cause are found in checking, write down them on this manual, and improve this.

This manual is described mainly basing on the matter which occured in the past, and T-2 checker is not used. But more adequate decision concerning troubles of switches etc. is assumed to be obtained, if T-2 checker is used.
Practice trouble shooting more speedily and adequately by not only using this manual but using T-2 checker. And not only many Mode will be able to be set by using T-2 checker, but also function check will be possible after completion of trouble shooting. Refer to operational manual of T-2 checker concerning details.

TABLE OF CONTENTS

1. FLOWCHART OF OPERATION PROCEDURE (AF SINGLE MODE)

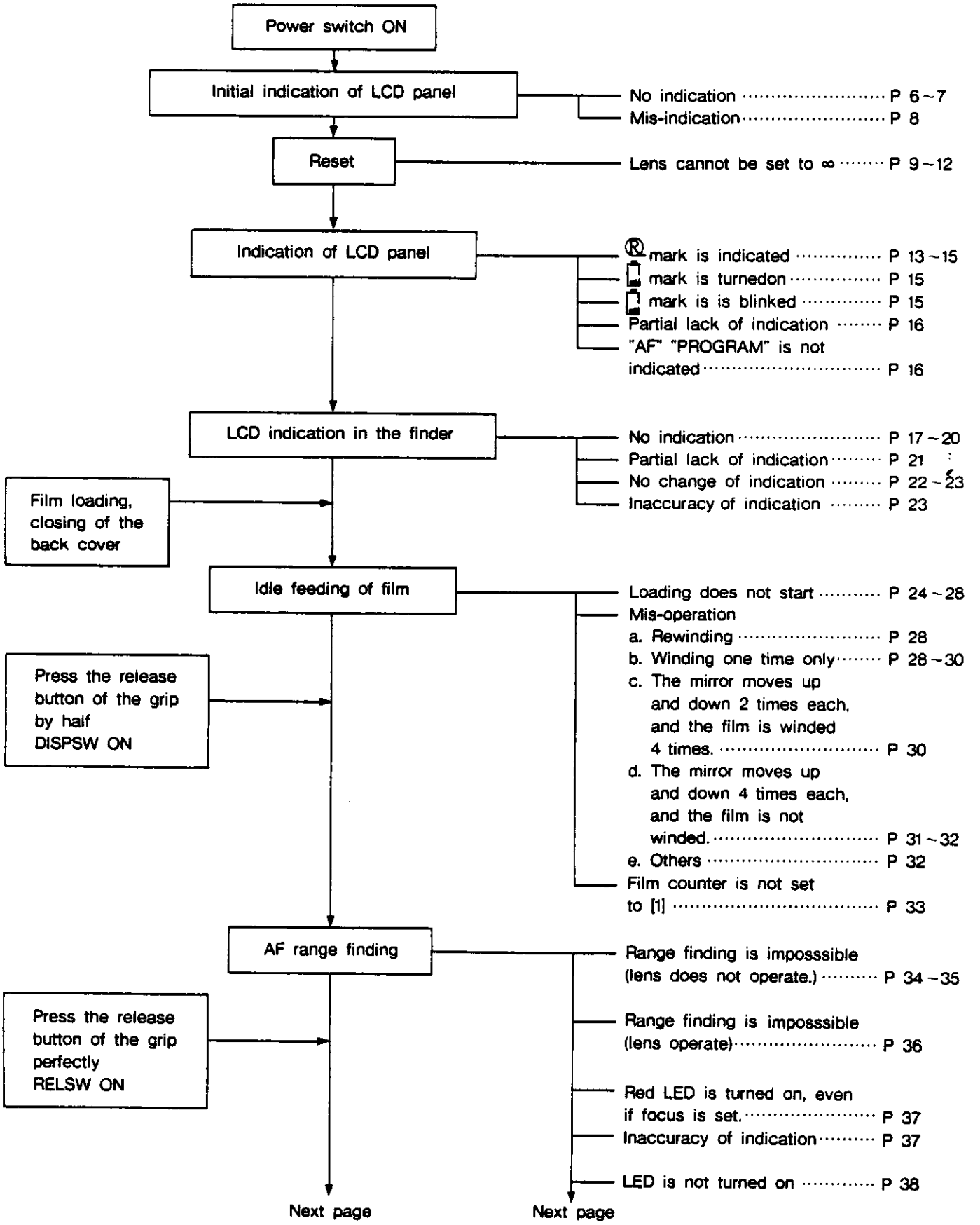

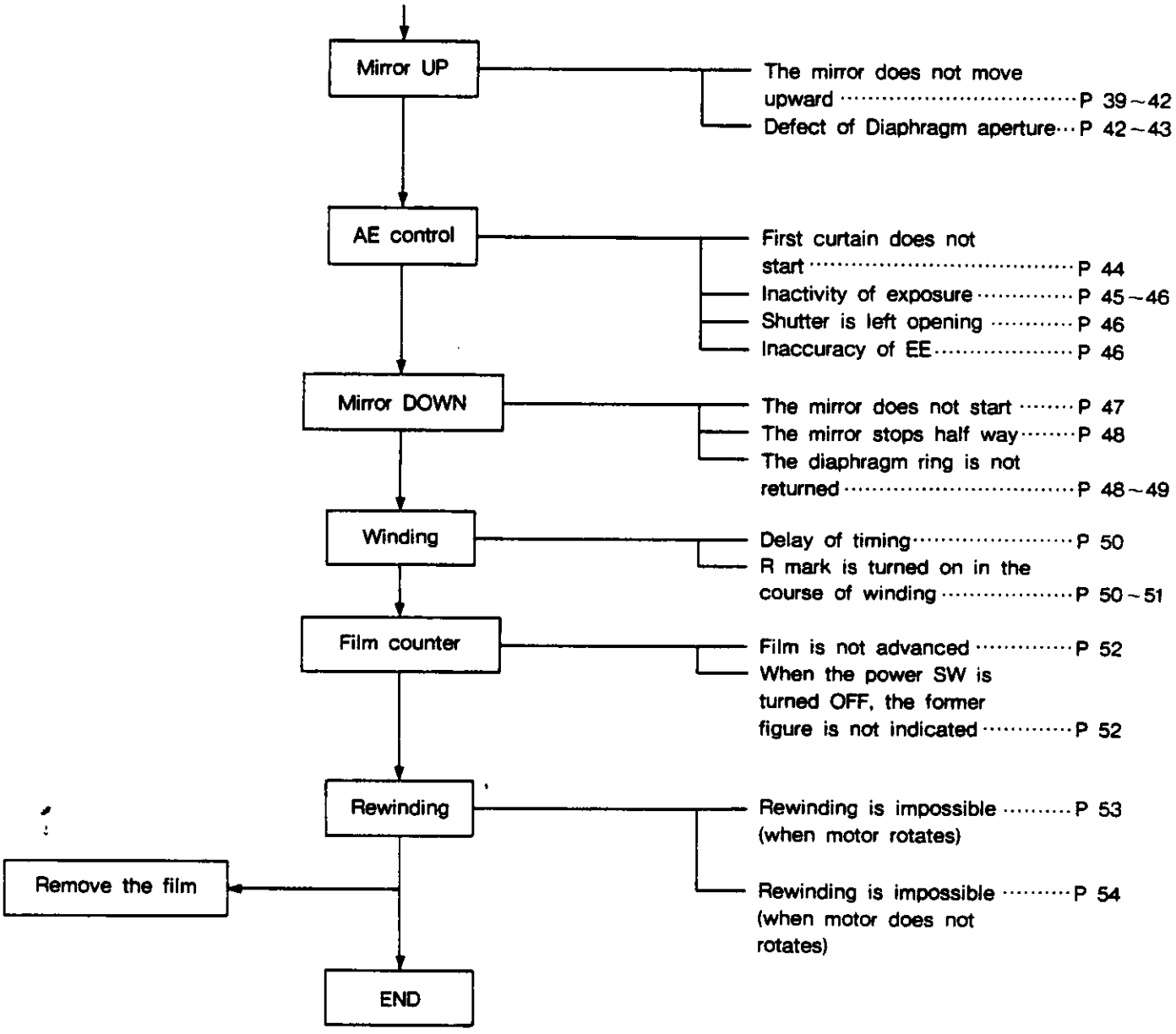

Other trouble shooting (but, normal operation at above flowchart)

2. LOCATION TABLE OF ELECTRICAL PARTS

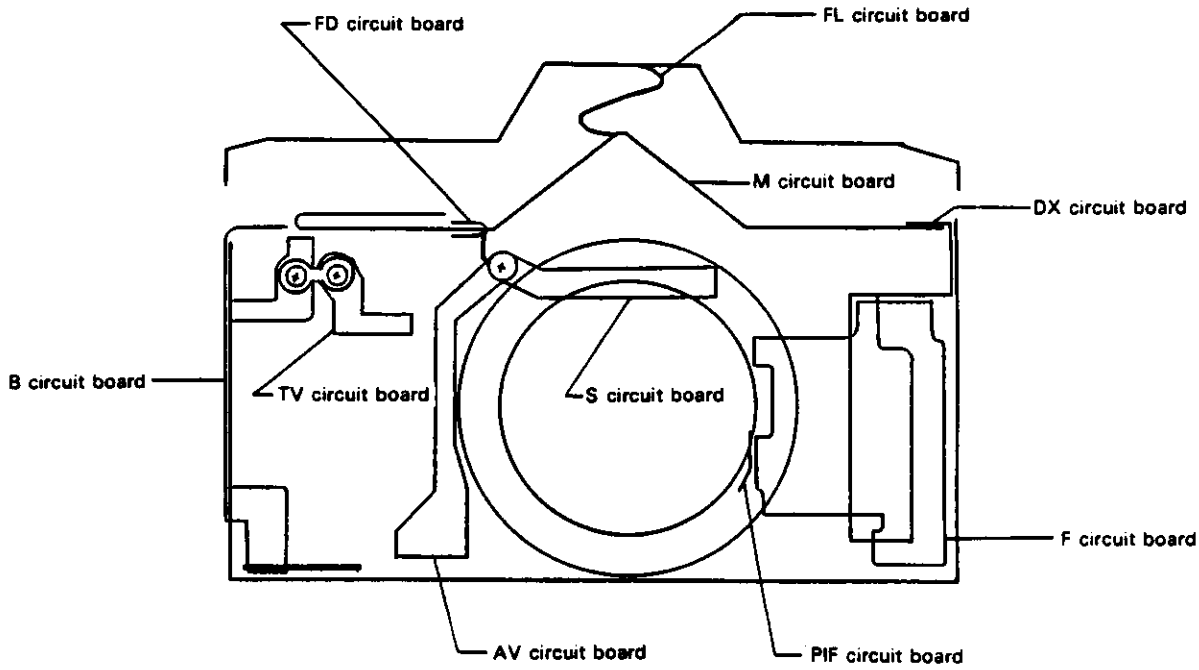

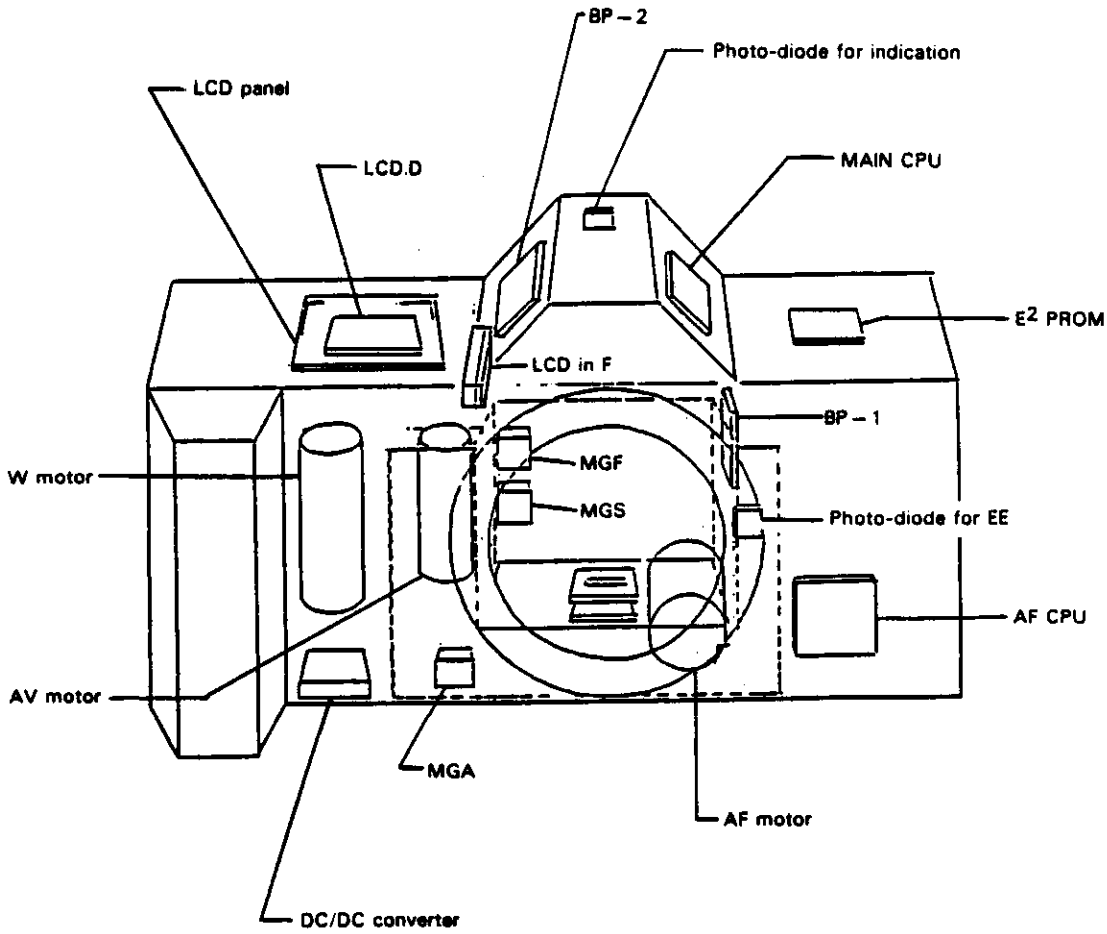

3. LOCATION TABLE OF CONNECTORS

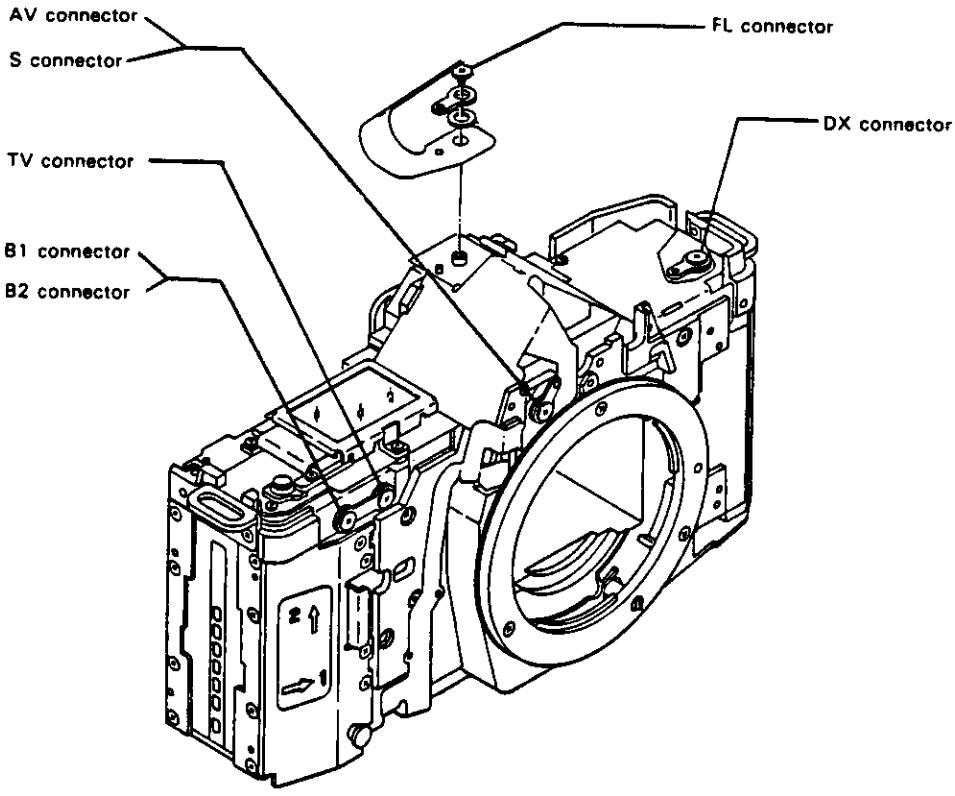

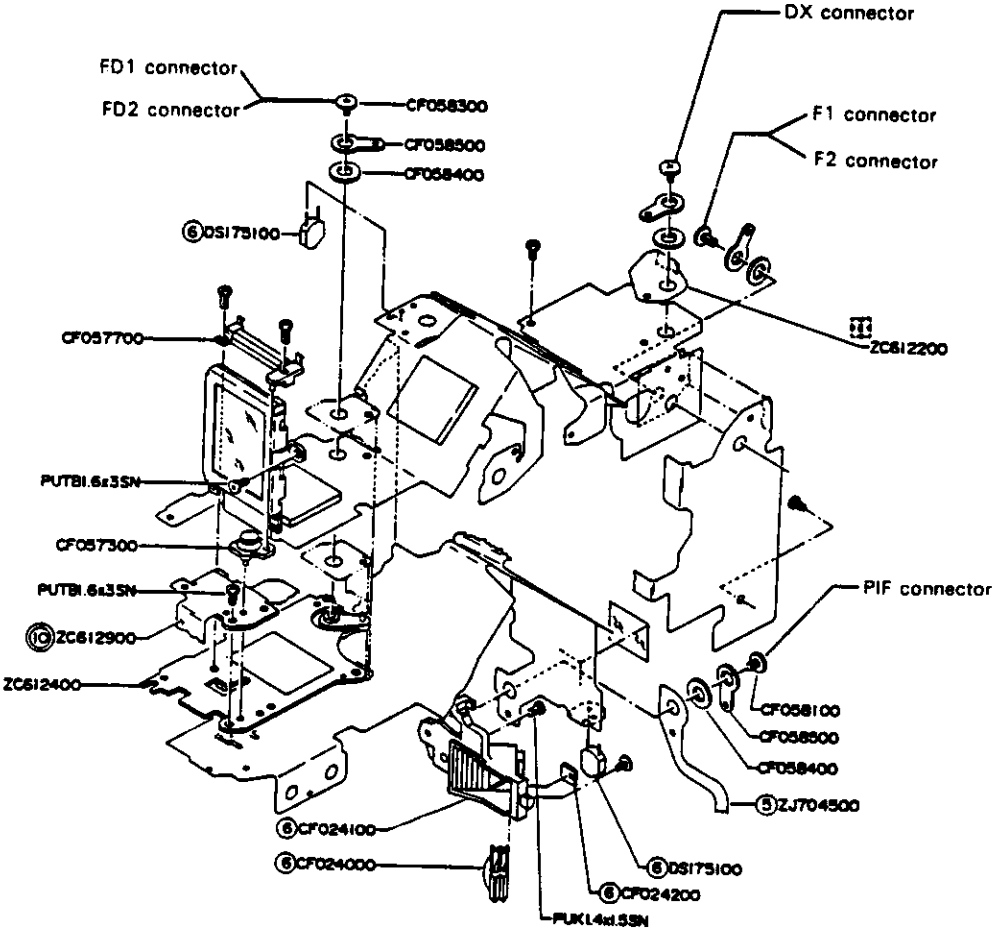

4. FUNCTION AND LOCATION OF SWITCHES

No.	Switch name	Switch condition	
		ON	OFF
①	Power SW	When slide switch is set to ON	–
②	BMSW	When old type lens is attached	When AF lens is attached
③	OCSW	When back cover is opened	When back cover is closed
④	WFSW	ON, OFF 3 times each, by advancing 1 frame of film	
⑤	WUSW	–	When film winding is completed
⑥	AVSW	–	When diaphragm ring is reset
⑦	MUSW	–	When mirror moves UPward
⑧	SESW	–	When running of the first curtain is completed
⑨	XSW	When running of the second curtain is completed	–
⑩	RWSW	When R button is pressed	–
⑪	DISPSW	When release button of the grip is pressed by half	–
⑫	RELSW	When release button of the grip is pressed perfectly	–

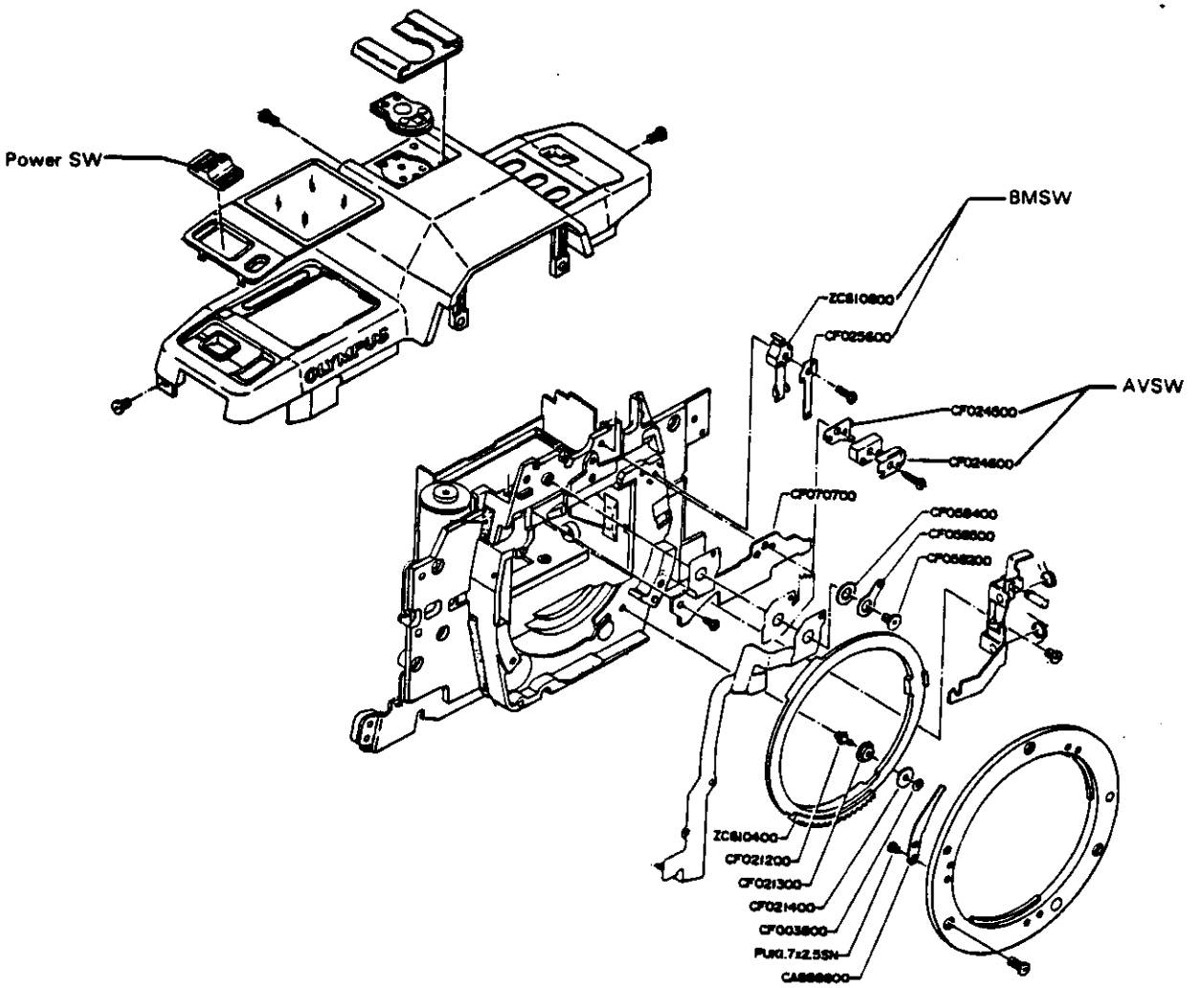

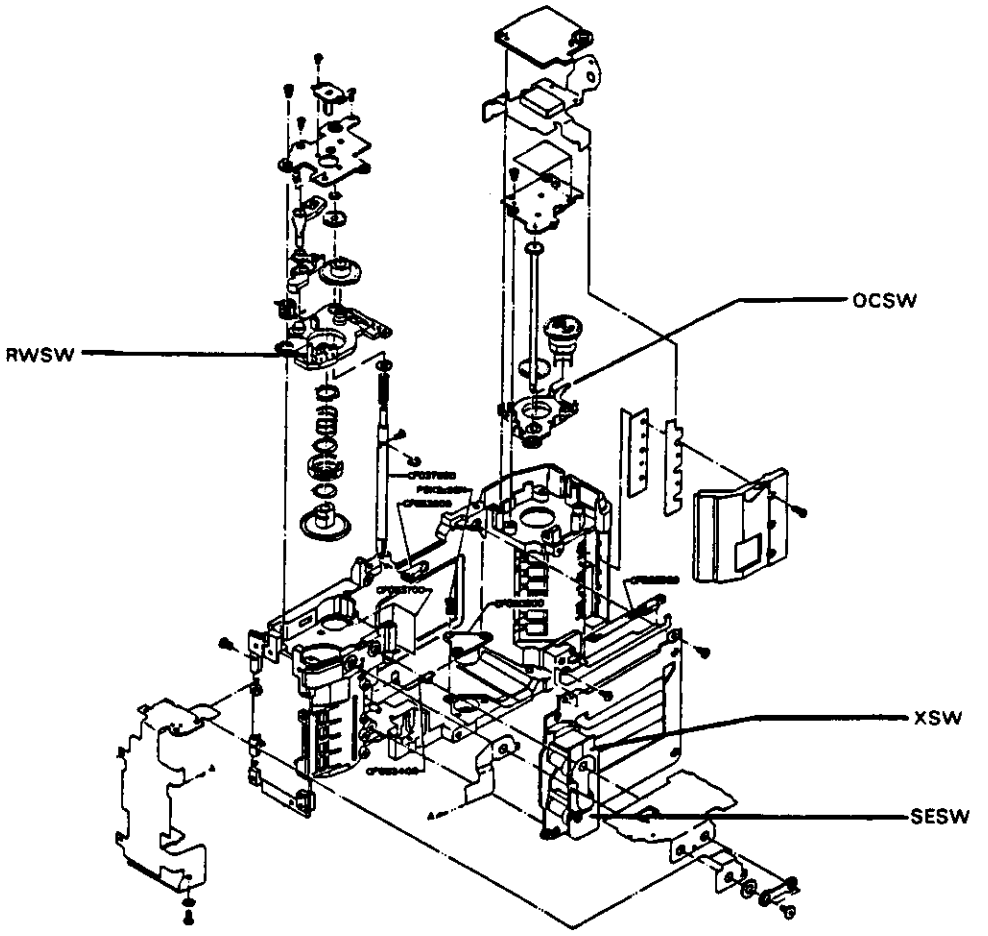
RWSW
OCSW
XSW
SESW

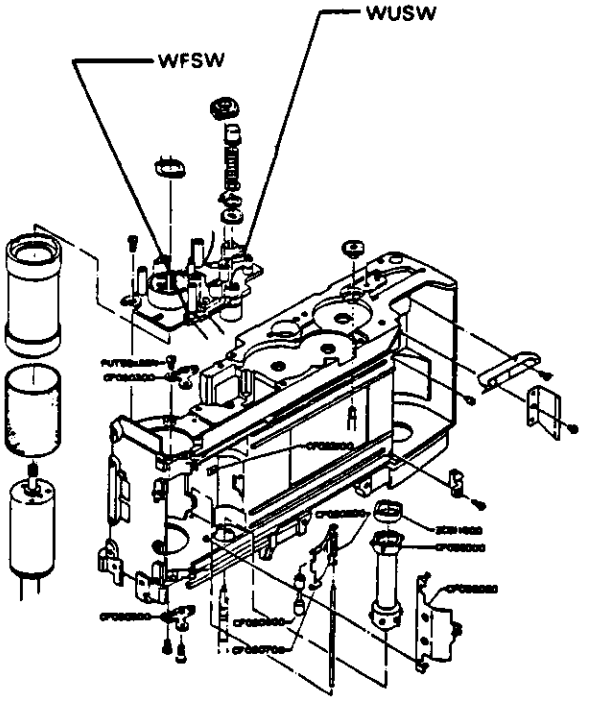
WUSW
WFSW

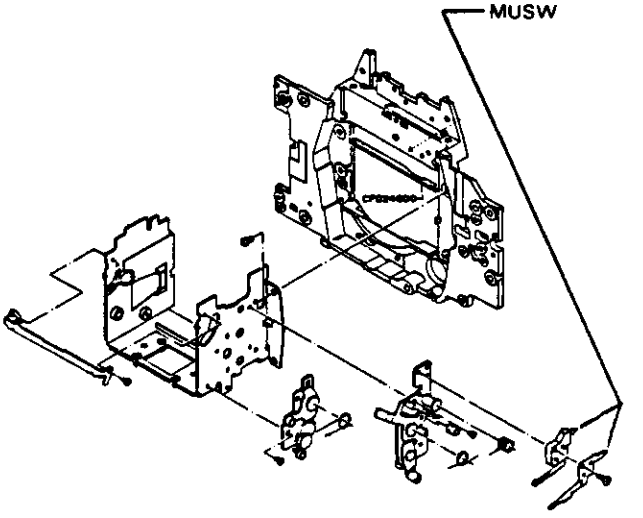
MUSW

5. TROUBLE SHOOTING CONCERNING ITEMS SHOWN IN THE FLOWCHART

5.1 Initial indication of LCD panel

· When the power switch is turned ON, indication such as shown in right figure should be indicated.
(remark): New batteris should be used.

State	Cause and checking method	Measure
No indication	(1) Power is not supplied from the grip. About 6V of the battery is enough. 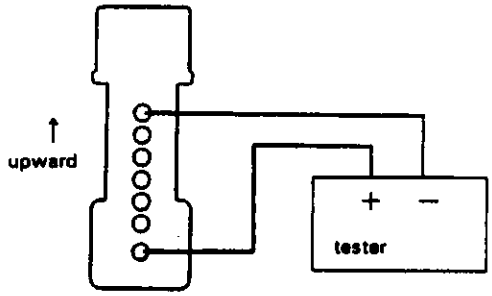 	Repair the grip
	(2) Contact of the grip and the camera body is imperfect. a. Imperfect contact due to dust and dirt. b. Imperface contact due to shortage of contact height.	Clean contact Repair the grip
	c. Imperfect contacts du to inadequate fitting between the grip and the camera body ① Replace with new G plate 2 (CF0524) ② In case of grip 300 Remove 3 screws (PUTB× 4SB), and make a opening by inserting a screw driver between inner plate (CB4004) and front cover (CB4003), insert 1 washers (CE3543) into opening upper and lower part each, and fasten 3 screws. ③ In case of grip 100 Remove body hooker to lower ise, and fasten it by 3 screws.	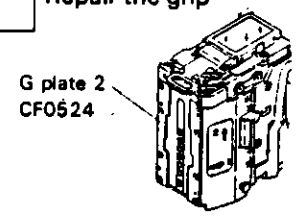 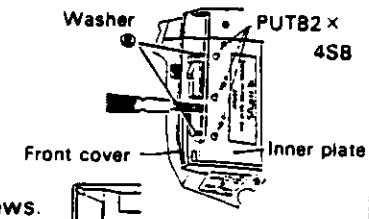 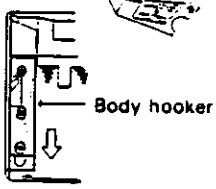

State	Cause and checking method	Measure
No indication	(3) Imperfect contact of the power SW B circuit board (ZC6129) 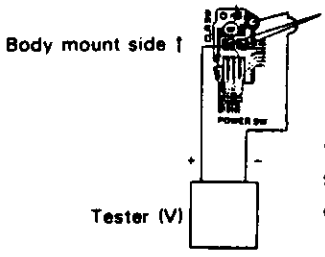 Make short this 2 point by tweezers, and if something is indicated, contact of the power SW is imperfect. Check voltage at this point, and if this is not same as the battery voltage (about 6V), check the items (1), (2) again.	Clear the power SW
	(4) Imperfect soldering of Y102 or defective of Y102 Measure voltage between pin 9 and 41 of the MAIN CPU. When the voltage reading is 5.5 ~5.7V and nothing is indicated, repair soldering or replace with new Y102. (Remark) Voltage should be measured within 30 sec. after turning on power SW. 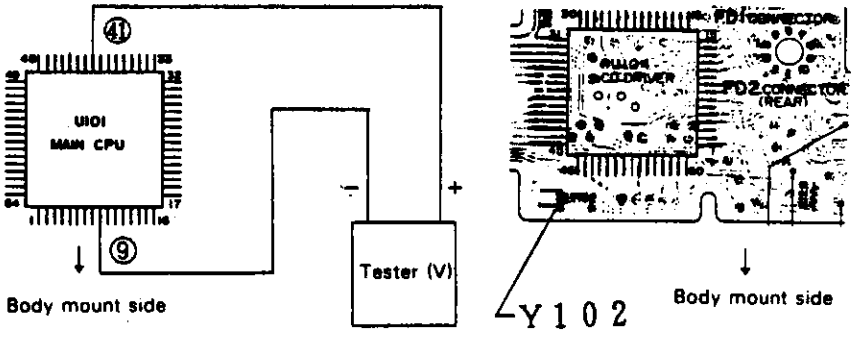 	Repair soldering or replace with new Y102. (Remark) Each parts of Y102 cannot be supplied itself.
	(5) Defect of M circuit board When the voltage reading is normal and nothing is indicated in spite of replacing with new Y102, M circuit board is defective.	Replace with new M circuit board (ZJ7090)
	(6) Imperfect contact of B2 connector When voltage reading between pin 9 and 41 of the MAIN CPU is "0" volt, check loosing and dirt of B2 connector.	Disassemble and clean B2 connector.
	(7) Defect of DC/DC convertor (B circuit board) When voltage reading between pin 9 and 41 of the MAIN CPU is "0" volt in spite of cleaning B2 connector, DC/DC convertor is defective.	Replace with new B circuit board (CF0705)

State	Cause and checking method	Measure
Mis-indication "EP" is indicated. EP	(1) Imperface contact of DX connector Check loosing and dirt of DX connector. (2) Defect of E²P-ROM When mis-indication cannot be repaired in spite of cleaning and reassembling of DX connector. Replace with new DX circuit bord. (3) Defect of M circuit board When mis-indication cannot be repaired in spite of replacing of DX circuit board, replace with new M circuit board.	Disassemble and clean DX connector. Replace with new DX circuit board (ZC6122) Replace with new M circuit board (ZJ7090)
Mis-indication Other indication except ISO "100"	(1) Imperface contact of DX contacts If Resistance between each contact and GND is less than 5 ~6Ω in conduction check, contacts are normal. (Remark) Take care of not to press contacts in measuring. 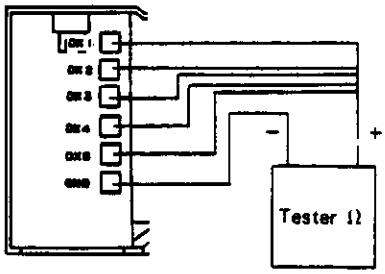	Disassemble, clean and reassemble DX contact

5.2 Reset

- Set the lens to ∞, and initialize sequence.
  (Some operation such as releasing of shutter, winding film and moving up and down of mirror are occured, when the camera is not normal condition or power is turned off during operation.)

State	Cause and checking method	Measure
Lens cannot be set to ∞.	(1) Defect of lens (lens ROM) Check with normal lens.	Repair the lens.
"AF", "PROGRAM" is not indicated on the LCD panel.	(2) Imperfect contact of S-circuit board contacts Check the lens and dirt of S-circuit board. 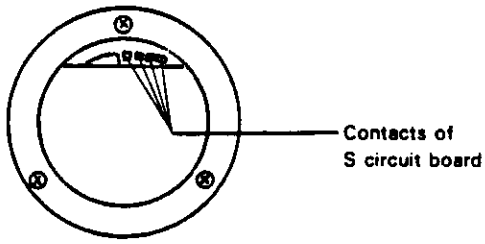 	Clean S-circuit board contacts.
	(3) Imperfect contact of S connector Check loosing and dirt of S connector. (4) Breaking of S-circuit board conduction pattern Check resistance between Ⓐ and Ⓐ, Ⓑ and Ⓑ, Ⓒ and Ⓒ. If they are less than 5 ~ 6 Ω each, S-circuit board is normal. 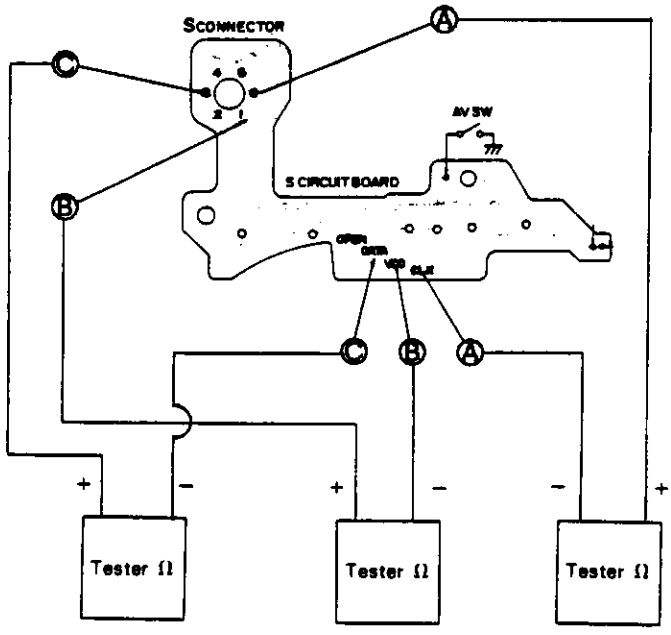 	Disassemble and clean S connector. Replace with new S-circuit board.

State	Cause and checking method	Measure
Lens cannot be set to ∞. "AF", "PROGRAM" is not indicated on the LCD panel.	(5) Short of BMSW Check resistance between MAIN CPU ⑱ and GND (body) ・If it is ∞Ω, BMSW is normal. ・If it is 0Ω, BMSW is short circuit. (Remark) The lens should be attached to the body correctly. 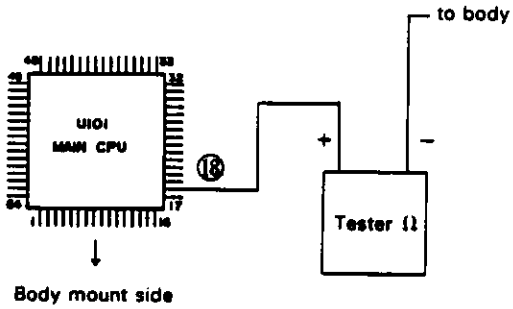	Reform or disassemble and clean BMSW (ZC6108, CF0256)
	(6) Imperfect soldering or breaking wire of R102 Make short between both end of R102 by tweezers. If the lens is set to ∞ by this operation, imperfect soldering or breaking wire of R102 is occurred. 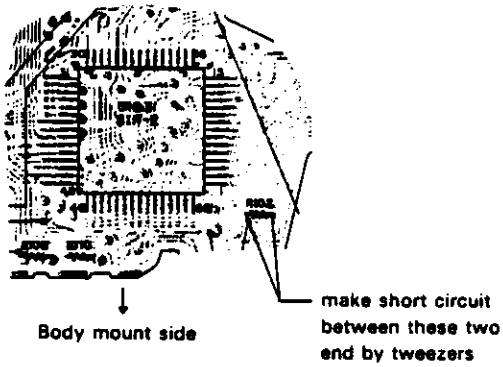	Repair soldering or replace with new circuit board (Remark) R102 is not supplied as parts itself.
	(7) Imperfact contact of F1 and F2 connector Check loosing and dirt of F1 and F2 connector. (Remark) In case of imperfact contact of F1, F2 connector, LCD in F does not indicate and shutter is not release, but shutter is release if the lens is removed and the power switch is turned ON. Next, the lens is attached again, then "AF", "PROGRAM" is indicated on the LCD panel, LCD in F indicates, but the shutter is not released.	Disassemble and clean F1 and F2 connector.

State	Cause and checking method	Measure
Lens cannot be set to ∞. "AF", "PROGRAM" is not indicated on the LCD panel.	(8) Defect of AF CPU Measure voltage between Q109 collector and GND (body). If the voltage is more than 5V and lens cannot be set to ∞, replace with new AF CPU (F circuit board 2) (Remark) The voltage should be measured within 30 sec. after turning ON of power switch. 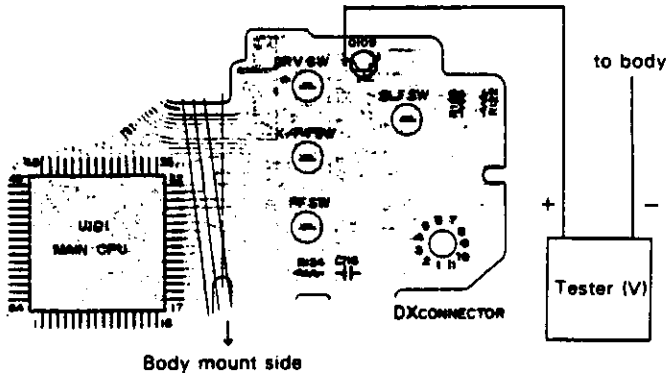 	Replace with new F circuit board 2 (ZC6113)
	(9) Defect of M circuit board Replace with new M circuit board if trouble is not repaired in spite of replacing with new F circuit board 2.	Replace with new M circuit board (ZJ7090)
lens cannot be set to ∞. "AF", "PROGRAM" is indicated on the LCD panel.	(1) Defect of lens (HELICOID) Check with a normal lens. (2) Defect of AF motor AF gear unit Connect BP-2 (42) to GND (body) and (39) to MAIN CPU (41) each. If the lens move to ∞ position from the closest position, AF motor or AF gear unit are normal. 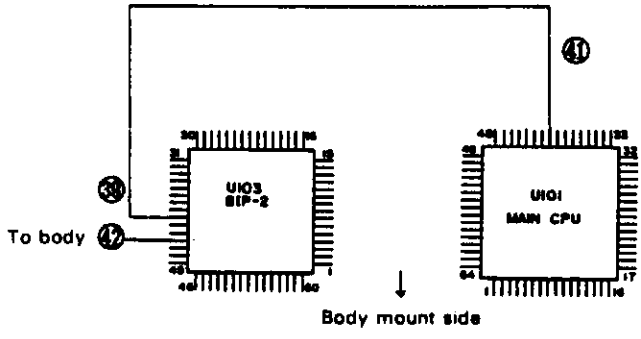 	Repair the lens Replace with new AF motor (ZC6160) or F base plate (ZC6110)

State	Cause and checking method	Measure
lens cannot be set to ∞. "AF", "PROGRAM" is indicated on the LCD panel.	(3) Defect of AF CPU Measure voltage between Q109 collector and GND (body). If the voltage is more than 5V and lens cannot be set to ∞, replace with new AF CPU (F circuit board 2). (Remark) The voltage should be measured within 30 sec. after turning ON of power switch. 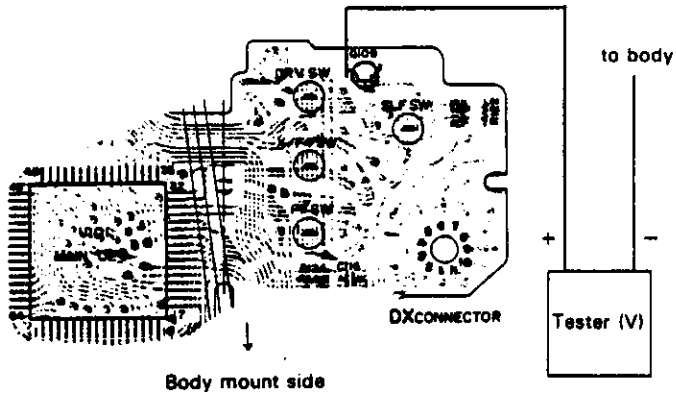 	Replace with new F circuit board 2 (ZC6113)
	(4) Defect of M circuit board Replace with new M circuit board if trouble is not repaired in spite of replacing with new F circuit board.	Replace with new M circuit board (ZJ7090)

5.3 Indication of LCD panel

· After reset, indication such as shown in right figure is indicated, patrone mark (▯) blinks.
Patrone mark disappears 30 sec. after reset, if the camera is left alone.

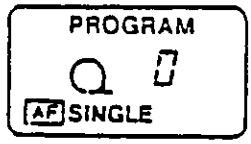

State	Cause and checking method	Measure
R mark is indicated.	(1) Imperfect contact of WUSW Measure resistance between pink lead wire and the camera body, if it is less than 5 ~6 Ω, WUSW is normal. (Remark) Film winding should be campleted in this case. If winding is not completed, complete it by turning the sprocket with fingers. 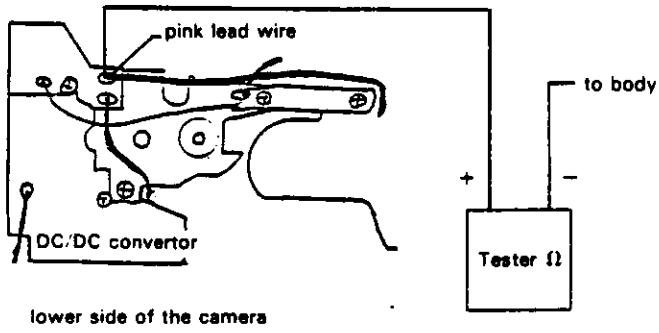 	Clean, adjust or replace WUSW (assembled in ZJ7027)
	(2) Break of W3 gear When W3 gear is broken, check mesh condition of W3 gear and 2 gear. If mesh of gears is not adequate, replace with new 2 grear. lower side of the camera 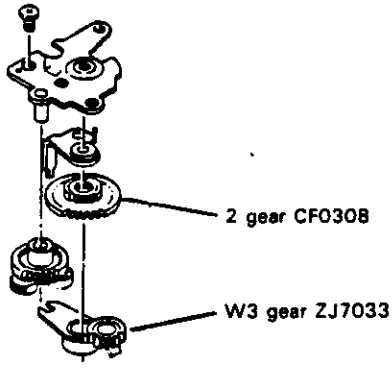 	Replace with new W3 gear (ZJ7033)

State	Cause and checking method	Measure
R mark is indicated	(3) Short circuit of W motor lead wire ⊕ and head plate (ZC6124)	Reform the lead wire and repair soldering.
	(4) Stopping of W gear etc. (due to Foreign substance, sands etc.) Remove the stopper (ZJ7032) towards the rail side and turn the sprocket with fingers. If the sprocket turns smoothly, gears are normal.	Clean W gears etc. or replace with new one.

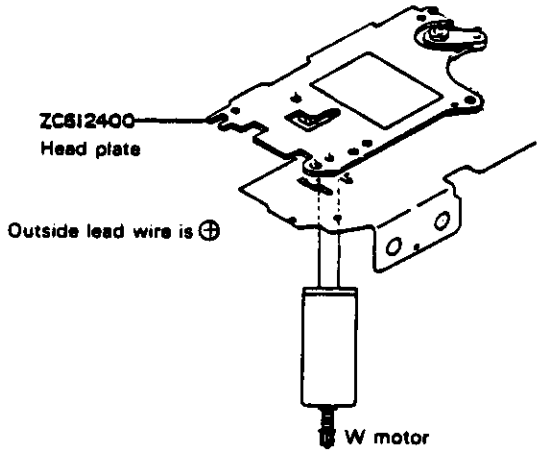

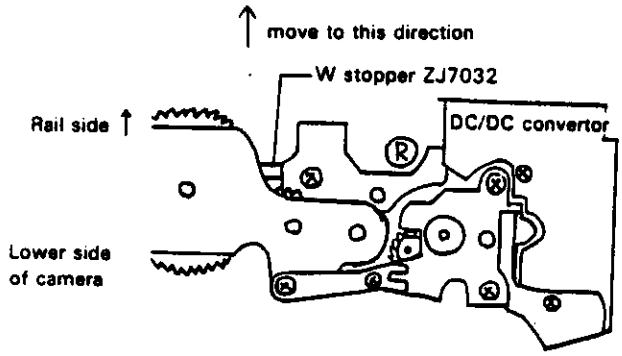

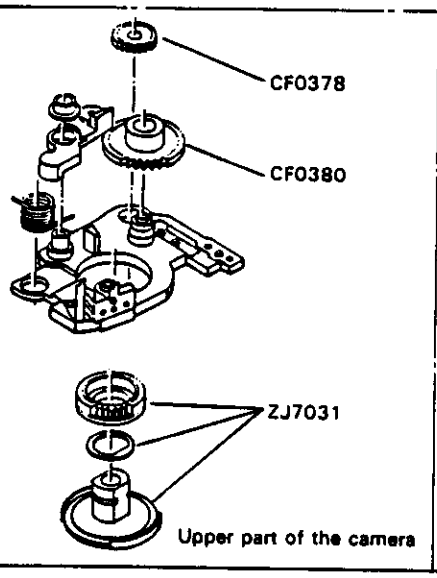

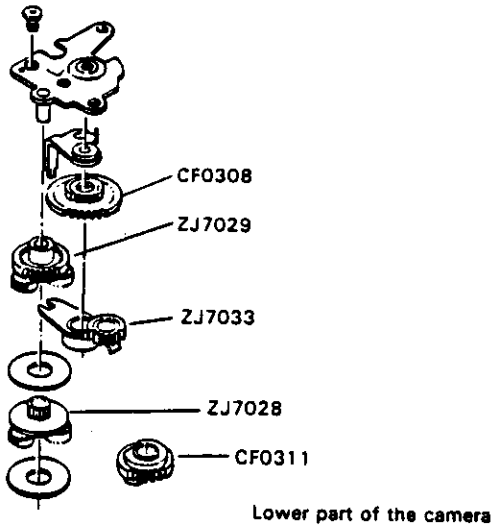

State	Cause and checking method	Measure
R mark is indicated.	(5) Defect of W motor Apply voltage (about 4V) directly as shown below figure. If the motor rotates, it is normal. (Remark) The stopper (ZJ7032) should be removed towards the film rail side, when voltage is applied. (refer to previous page) 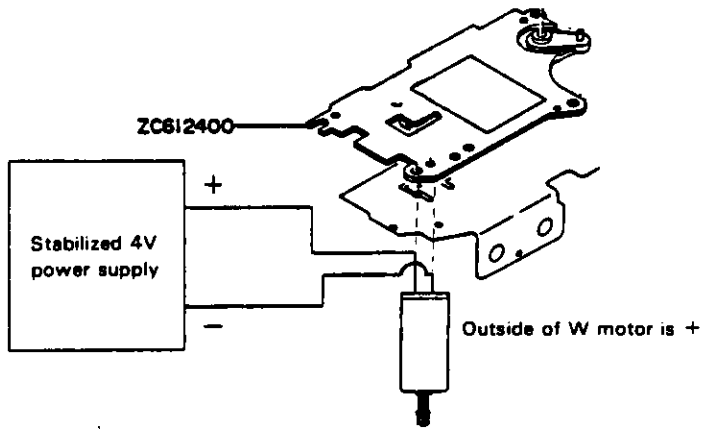 	Replace with new W motor (ZC6163)
mark is turned on (LCD in F does not indicate, shutter is not replease.)	(1) Imperfect contact of DX connector Check loosing and dirt of DX connector. (2) Imperfect contact of E²P-ROM Replace with new DX circuit board when trouble is not repaired in spite of cleaning and reassembling of DX connector. (3) Imperfect contact of M circuit board Replace with new M circuit board when trouble is not repaired in spite of replacing of DX circuit board.	Disassemble and clean DX connector. Replace with new DX circuit board (ZC6122) Replace with new M circuit board (ZJ7090)
mark blinks	(1) Imperfect adjustment of M circuit board (Remark) Battery voltage and capacity should be checked before adjustment. (2) Defect of M circuit board Replace with new M circuit board when trouble is not repaired in spite of adjusting locking voltage.	Adjust battery check voltage of M circuit board. Replace with new M circuit board (ZJ7090)

State	Cause and checking method	Measure
Indication is partially lacking.	(1) Defect of M circuit board.	Replace with new M circuit board (ZJ7090)
"AF", "PROGRAM" is not indicated on the LCD panel.	(1) Defect of M circuit board Check whether the lens can be set to ∞ or not, when power switch is turned ON. a. When cannot be set to ∞: Return to the "Reset" item of flowchart again. b. When can be set to ∞" M circuit board is defective.	Replace with new M circuit board (ZJ7090)

5.4 LCD indication in finder

· Shutter speed and diaphragm which are shown in the below program diagram according as brightness and type of the lens are indicated in the finder.

(Remark)

① These are indicated within 30 sec. after turning ON of power switch.

② When these are not indicated or the inaccuracy of indication due to non-returning of the diaphragm ring or the mirror, repair these trouble first.

Indication in Finder

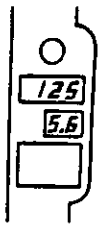

shutter speed
diaphragm

program diagram

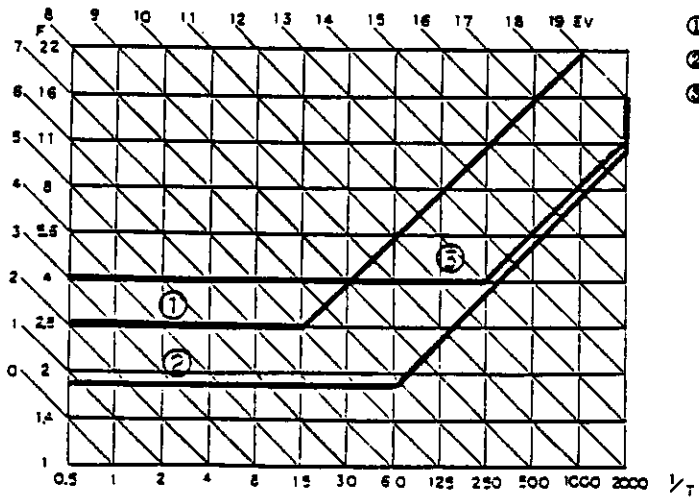

example

①28mmF2.8

②50mmF1.8

③70~210mm
F4の210mm

Class.	Focal length	Bending point
W	under 34mm	1/15
S	more than 34mm under 90mm	1/60
T	more than 90mm	1/250

State	Cause and checking method	Measure
No indication	(1) Defect of the lens Check with a normal lens	Repair the lens
	(2) Imperfect contact of S circuit board contacts Check dirt of contacts of the lens and the body. 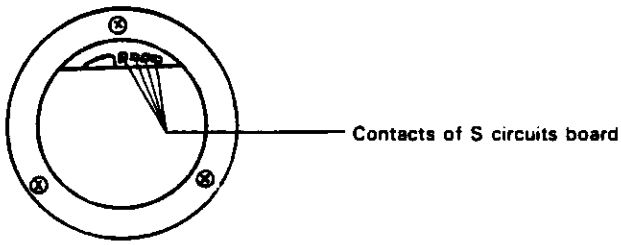 	Clean contacts
	(3) Imperfect contact of S connector Check loosing and dirt of S connector.	Disassemble and clean S connector
	(4) Break of S circuit board pattern Check resistance between Ⓐ and Ⓐ, Ⓑ and Ⓑ, Ⓒ and Ⓒ as shown below. If they are less than 5 ~ 6 Ω, S-circuit board pattern is normal. 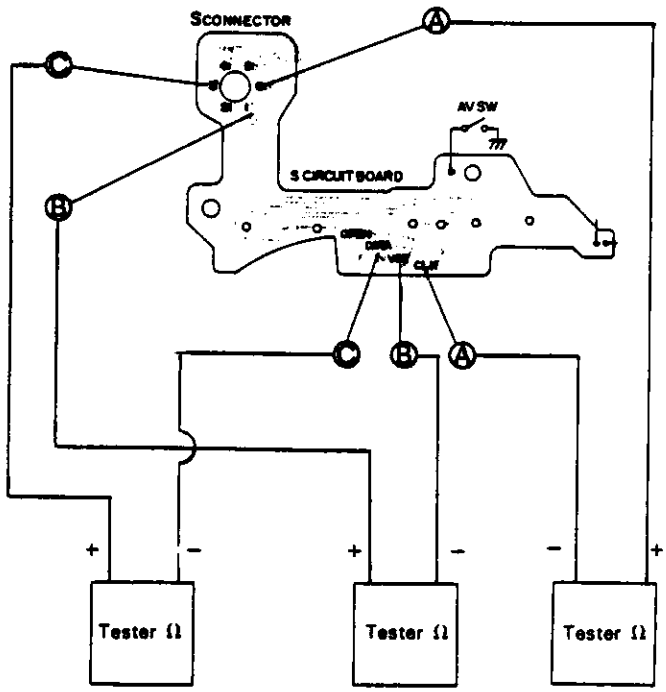 	

State	Cause and checking method	Measure
No indication	(5) Short circuit of BMSW Check resistance between MAIN CPU (18) and GND (body) ∞Ω → normal condition 0Ω → short circuit (Remark) The lens should be attached correctly. 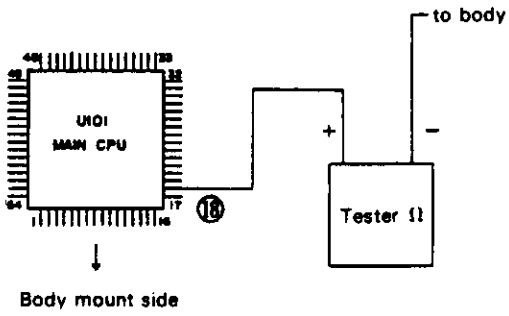 	Reform or disassemble and clean BMSW (ZC6108, CF0256)
	(6) Defective soldering of R121 Measure resistance of R121. If it is 270Ω, R121 is normal. (Remark) Resistance should be measured after turning OFF of the power switch. 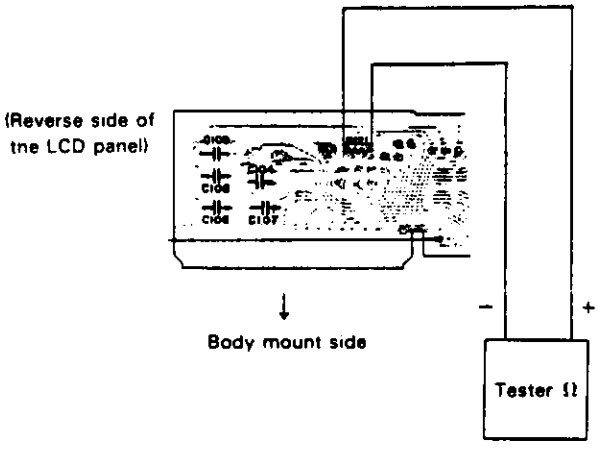 	Repair soldering or replace with new circuit board. (Remark) R121 is not supplied as parts itself.

State	Cause and checking method	Measure
No indication	(7) Defect of LCD. D Signal is not output from LCD. D ⑤, ⑥. Measure voltage by contacting the tester⊕ to MAIN CPU 41 and tester⊖ to LCD. D ⑤, ⑥. If they are 5 ~ 5.7V, LCD. D is normal. (Remark) Voltage should be measured within 30 sec. after turning ON of power switch. 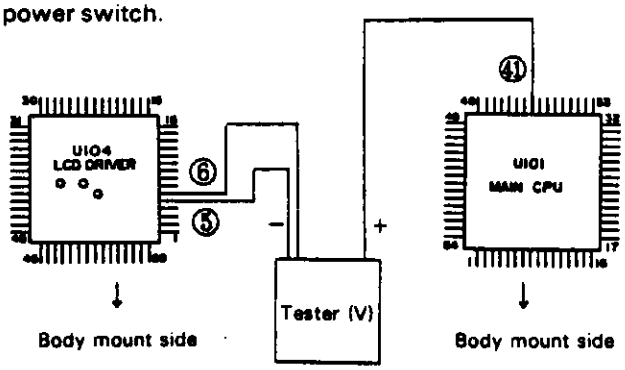 	Replace with new M circuit board (ZJ7090)
	(8) Imperfect contact of FD1, FD2 connector Check loosing and dirt of FD1, FD2 connector.	Disassemble and clean FD1, FD2.
	(9) Breaking wire of F. LED Breaking wire of LED which illuminates LCD in F. Apply to voltage (5 ~ 6V) between FD 2 connector 8 (+) and 1 (−) of FD circuit board. If F. LED is turned on, it is normal. FD 2 connector is located under of FD 1 connector at reverse side of LCD Panel. 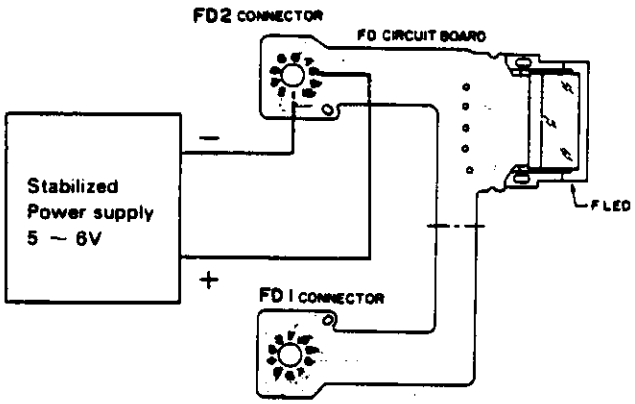 	Replace with new FD circuit board (ZC6161)

State	Cause and checking method	Measure
No indication	(10) Defect of FD circuit board Measure voltage between LCD. D (16) ~ (30) and the body. When each voltage is within 3.4~3.6V but nothing is indicated, FD circuit board is defective. (Remark) Voltage should be measured within 30 sec. after turning ON of power switch. 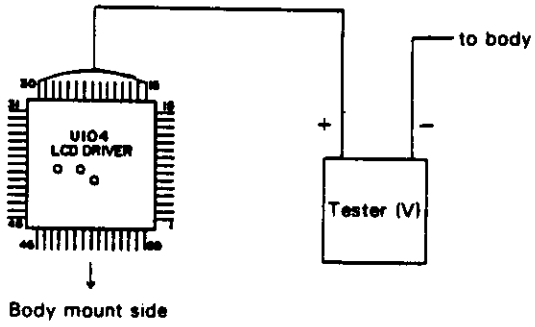 	Replace with new FD circuit board (ZC6161)
	(11) Defect of M circuit board When no voltage is measured in the above item, M circuit board is defective.	Replace with new M circuit board (ZJ7090)

State	Cause and checking method	Measure
Indication is partially lacking.	(1) Imperfect soldering or defect of LCD.D Measure voltage between pin (16)~(30) and GND (body). If voltage of 3.4~3.6V is not induced at each pin, repair soldering at each pin. And, if voltage above mentioned is not induced at each pin even after repairing soldering, LCD.D is defective. (Remark) Voltage should be measured within 30 sec. after turning ON of power SW. 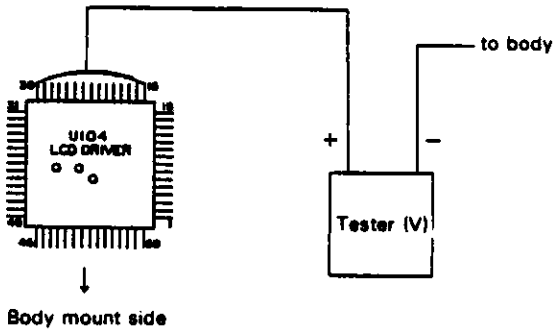 	Repair soldering of LCD.D, or Replace with new M circuit board (ZJ7090)
	(2) Defect of M circuit board If no voltage is induced between pin (16)~(30) and GND (body), M circuit board is defective.	Replace with new M circuit board (ZJ7090)

State	Cause and checking method	Measure
Indication is not changed in "Lo, 1.8". (when AS 5018 lens is used.)	(1) Gray lead wire projected from the photo-diode (DS1751) is caught between the body and the upper plate, and short circuit is made. 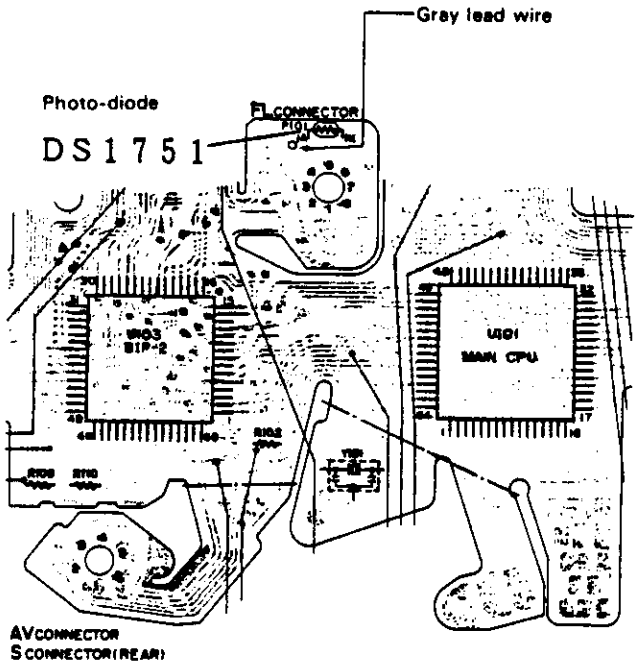	Reform gray lead wire.
	(2) Break of the photo-diode (DS1751) Replace with new photo-diode, as decision of good one or defective one is troublesome in single parts condition. (3) Break of M-circuit board pattern Check resistance between BP-1 (11) and photo-diode (K) between BP-1 (12) and photo-diode (A) each. If resistance is less than 5 ~ 6 Ω, M circuit board is normal. 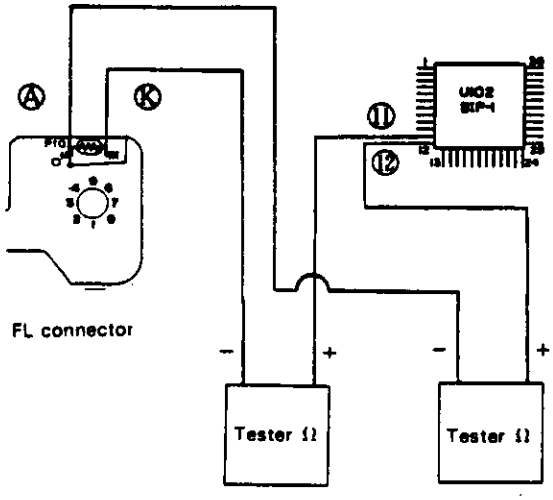	Replace with new photo-diode (DS1751) Repair M circuit board pattern, or replace with new M circuit board.

State	Cause and checking method	Measure
Indication is not changed in "Lo, 1.8". (when AS 5018 lens is used.)	(4) Imperfect soldering of BP-1 (11), (12) Check disconnection of solder and imperfect contact. (5) Defect of M circuit board If trouble is not repaired by procedure mentioned above, replace with new M.	Repair soldering of BP-1 (11), (12)
Inaccuracy of indication	(1) Imperfect adjustment	Readjust it.
	(2) Defect of photo-diode (DS1751) If trouble is not repaired by readjusting, replace with new photo-diode. (Remark) It should be confirmed that the blue filter is located in front of the photo-diode. 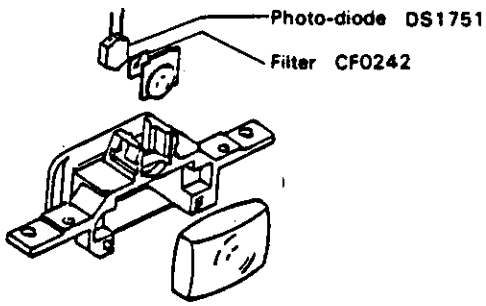 	Replace with new photo-diode. (DS1751)
	(3) Defect of M circuit board If trouble is not repaired even by replacing of photo-diode, replace with new M circuit board.	Replace with new M circuit board (ZJ7090)

5.5 Idle feeding of film

· Moving up and down of the mirror and winding operation of film are practiced 4 times each, and "1" is indicated in the film counter. Indication such as shown in right figure is indicated in the LCD panel after idle feeding of film.

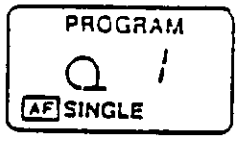

State	Cause and checking method	Measure
Does not start	(1) Imperfect contact, short circuit, imperfect soldering of OCSW. Measure resistance between MAIN CPU (12) and GND (body). If it is value of mentioned below, OCSW is normal. When rear cover is opned → less than 10kΩ When rear cover is closed → ∞Ω (Remark) If the check mentioned above is alright, items of (2)~(4) is not required to check further. 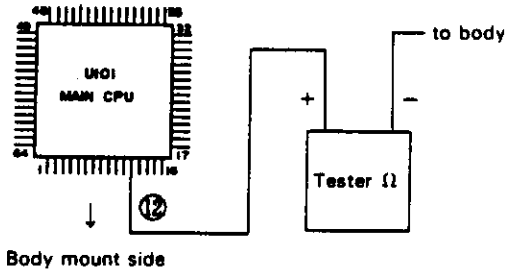 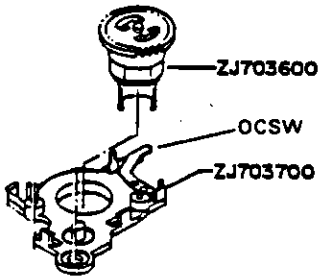 	Repair soldering, clean or replace OC SW (attached to ZJ7037).
	(2) Imperfect contact of DX connector Check loosing and dirt of DX connector.	Disassemble and clean DX connector.

State	Cause and checking method	Measure
Does not start	(3) Break of circuit pattern of DX circuit board Check resistance between DX connector ① and OCSW Ⓐ, between DX connector ⑩ and OCSW Ⓑ. If it is less than 5 ~ 6 Ω, DX circuit board is normal. 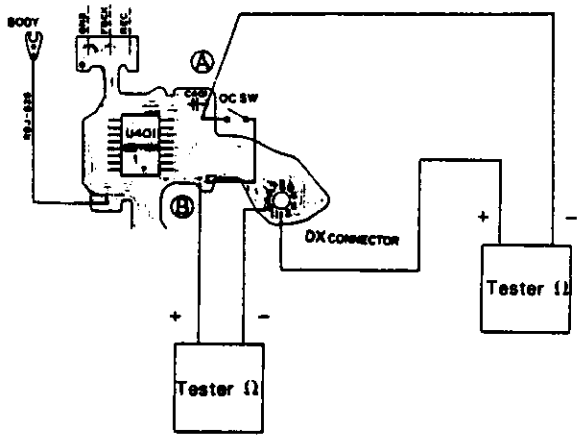 	Replace with new DX circuit board (ZC6122)
	(4) Break of circuit pattern of M circuit board Check resistance between MAIN CPU ⑫ and DX connector ① If it is less than 5 ~ 6 Ω, M-circuit board is normal. 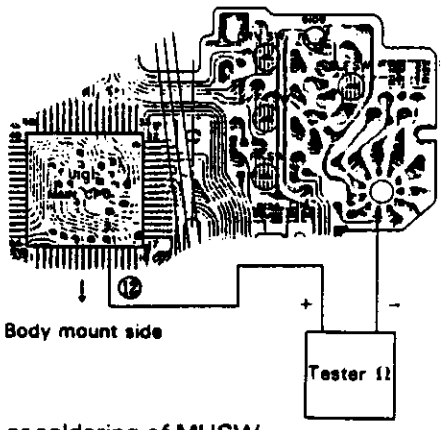 	Replace with new M circuit board (ZJ7090)
	(5) Imperfect contact or soldering of MUSW Check resistance between BP-2 ⑤⑤ and GND (body), if it is 0 Ω, MUSW is normal. If the check mentioned above is allright, items of (6) ~ (8) is not required to check further. 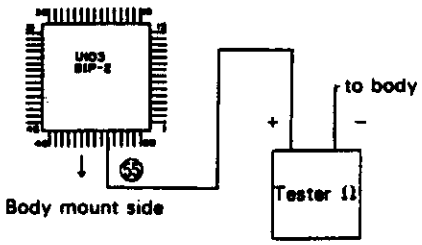 	Repair soldering, clean or replace MU SW (CF0091, ZC6157)

State	Cause and checking method	Measure
Does not start	(6) Imperfaceе contact of AV connector Check loosing and dirt of AV connector.	Disassemble and clean AV connector.
	(7) Break of circuit pattern of AV circuit board Check resistance between MUSW A and AV connector ② between MUSW B and AV connector ③. If they are less than 5 ~ 6 Ω, AV circuit board is normal. 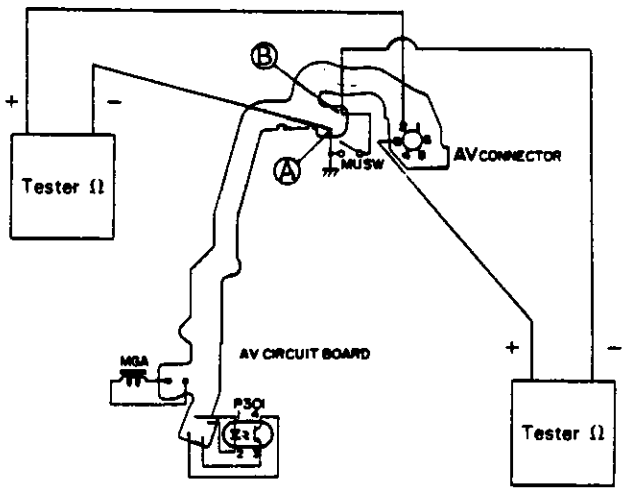 	Replace with new AV circuit board (ZJ7044)
	(8) Break of circuit pattern of M circuit board Check resistance between BP-2 (55) and AV connector ③. If it is less than 5 ~ 6 Ω, M-circuit board is normal. 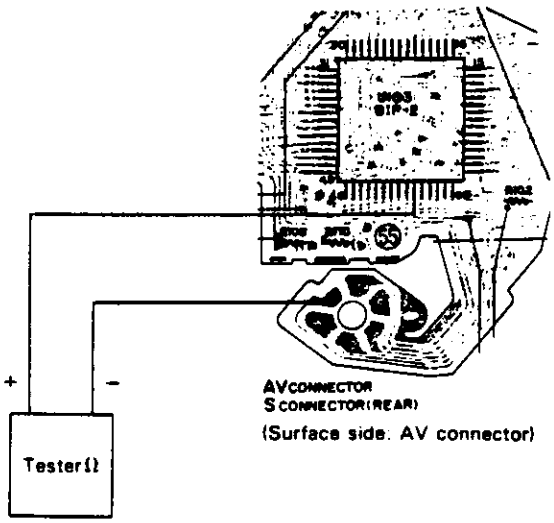 	Replace with new M circuit board (ZJ7090)

State	Cause and checking method	Measure
Does not start	(9) Stopping of W gear etc. (due to foreign substance, sands etc.) Remove the stopper (ZJ7032) towards the film rail side and turn the sprocket with fingers. If the sprocket turns smoothly, gears are normal. 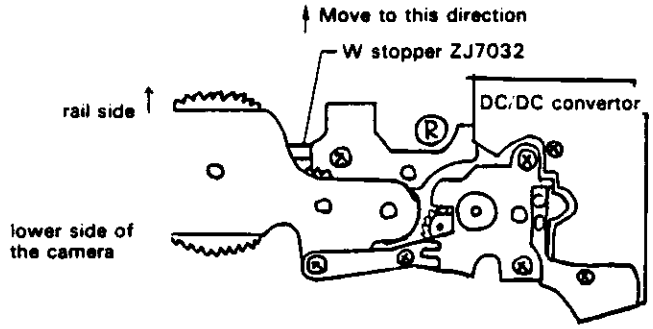 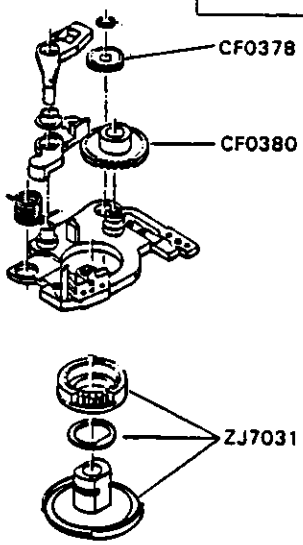 upper part of the camera 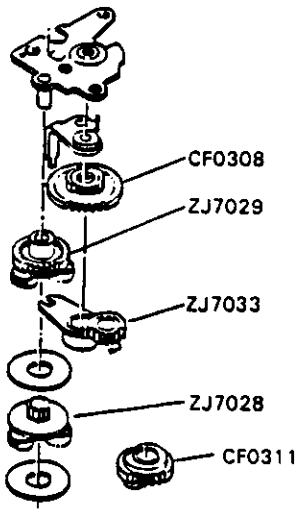 lower part of the camera	Clean W gears etc. or replace with new one.
	(10) Defect of W motor Apply voltage (about 4V) directly to the motor. If motor rotates, it is normal. (Remark) The stopper should be removed towards the film rail side, when voltage is applied. (Refer to the above figure) 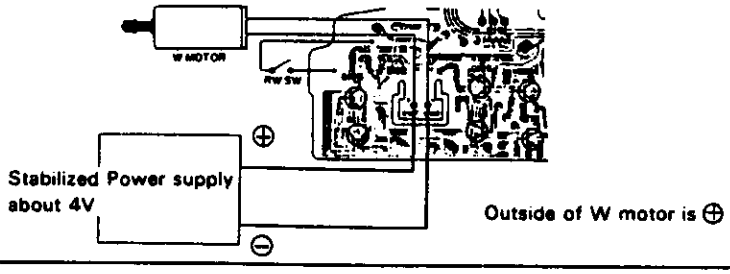 	Replace with new W motor. (ZC6163)

State	Cause and checking method	Measure
Does not start	(11) Defect of AV motor or AV motor gear unit Apply voltage (about 4V) directly to the AV motor. If the mirror moves up and down, they are normal. When white lead wire of the AV motor is connected to ⊕ side, and green lead wire to ⊖ side, the mirror moves upwards, and when lead wires are connected to the reverse side, the mirror moves downwards. (Remark) Connection should be removed immediately after completion of moving up and down of the mirror, lest AV motor and gears etc. should break.	Replace with new AV motor (ZC6155) or A base plate (ZC6103)
	(12) Defect of M circuit board If trouble is not repaired even by measure mentioned above, replace with new M circuit board.	Replace with new M circuit board. (ZJ7090)
Mis-operation a. Film is rewinded.	(1) Short circuit of RWSW Measure voltage between MAIN CPU (13) and GND (body), if it is 4～6V, RWSW is normal 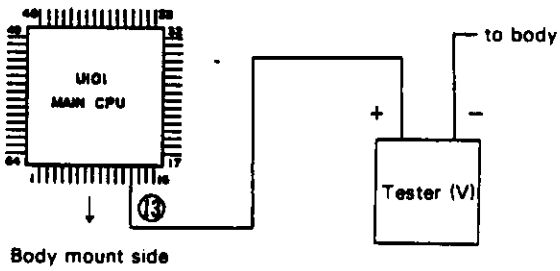	Reform RWSW or replace with new one. (assembled in ZJ7038)
b. Film is winded only 1 time.	(1) Break of W gear When W3 gear is broken, check mesh condition of W3 gear and 2 gear. If mesh of gears is not adequate, replace with new 2 gear. 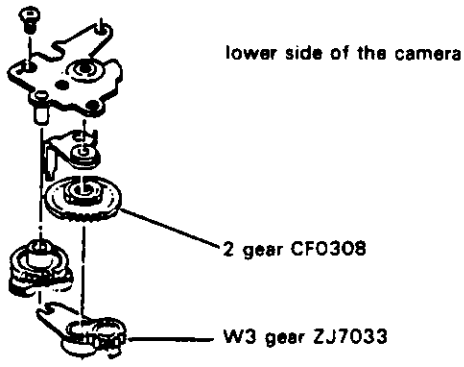	Replace with new W3 gear (ZJ7033)

State	Cause and checking method	Measure
b. Film is winded only 1 time.	(2) Imperfect contact or soldering of WUSW Measure voltage between BP-2 (52) and GND (body), if it is less than 5 ~ 6mV, WUSW is normal. In this case, items of (3) ~ (5) below is not required to check. (Remark) · Voltage should be measured within 30 sec. after turning ON of power SW. · Fil winding should be completed. Complete it by turning the sprocket with fingers, if it is not. 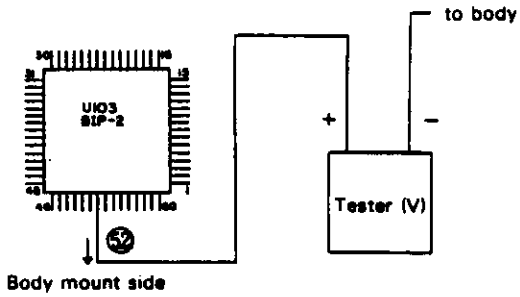 	Clean, repair soldering, adjust or replace WUSW. (assembled in ZJ7027)
	(3) Imperfect contact of B1 connector Check loosing and dirt of B1 connector. (4) Break of circuit pattern of B circuit board Check resistance between B1 connector (1) and pink lead wire, if it is less than 5 ~ 6Ω, B-circuit board is normal. 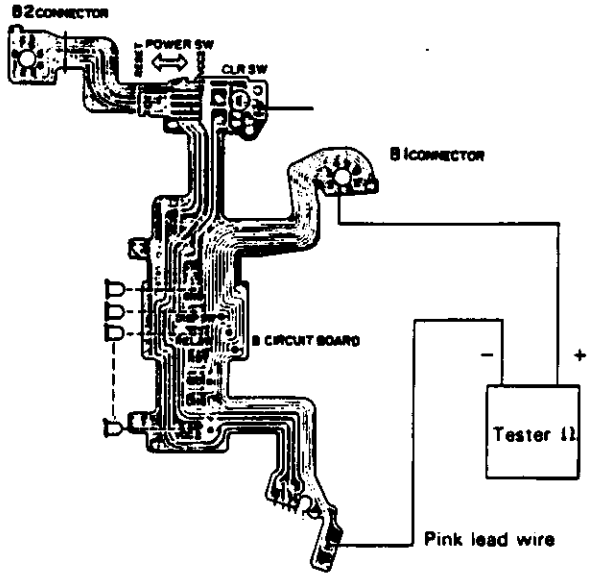 	Disassemble and clean B1 connector. Replace with new B circuit board (ZC6129)

State	Cause and checking method	Measure
b. Film is winded only 1 time.	(5) Break of circuit pattern of M circuit board Check resistance between B1 connector (1) and BP-2 (52) if it is less than 5 ~6Ω, M-circuit board is normal. 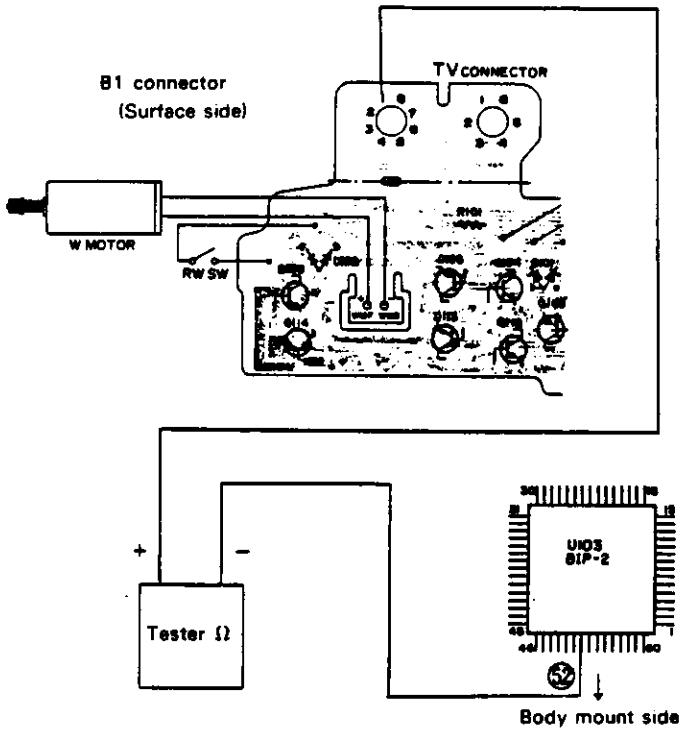 	Replace with new M circuit board (ZJ7090)
c. The mirror moves up and down each 2 times, and film is winded 4 times.	(1) Short circuit of AVSW Measure voltage between BP-2 (54) and GND (body). If it is 5.5 ~5.7V, AVSW is normal. · Voltage should be measured within 30 sec. after turning ON of power SW. · When diaphragm ring is not returned, repair it first. 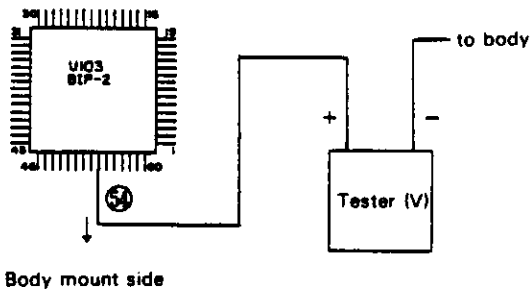 	Reform or replace AVSW. (CF0245, CF0246)

State	Cause and checking method	Measure
d. The mirror moves up and down 4 times each, and film is not winded.	(1) Imperfect contact or soldering of MUSW Check resistance between BP-2 (55) and GND (body), if it is less than 5 ~ 6 Ω, MUSW is normal. In this case, items of (2) ~ (4) below is not required to check. 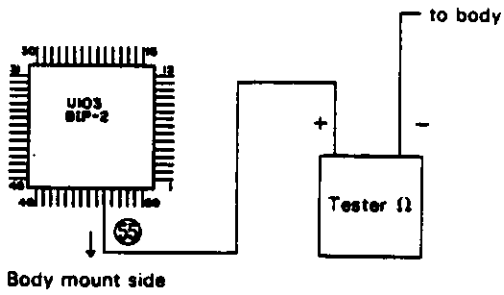 	Clean, repair soldering, or replace MUSW (CF0091, ZC6157)
	(2) Imperfect contact of AV connector Check loosing and dirt of AV connector.	Disassemble and clean AV connector.
	(3) Break of circuit pattern of AV circuit board Check resistance between MUSW (A) and AV connector (2) MUSW B and AV connector (3). If they are less than 5 ~ 6 Ω, AC circuit board is normal. 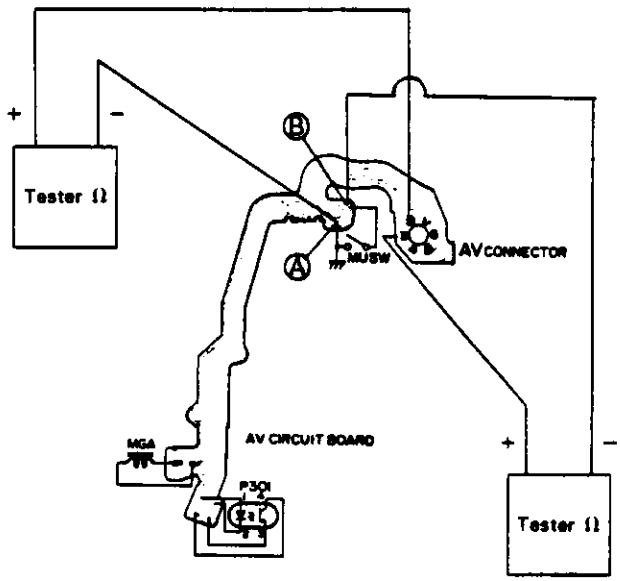 	Replace with new AV circuit board (ZJ7044)

State	Cause and checking method	Measure
d. The mirror moves up and down 4 times each, and film is not winded.	(4) Break of circuit pattern of M circuit board Check resistance between BP-2 (55) and AV connector (3), if it is less than 5 ~ 6 Ω, M circuit board is normal. 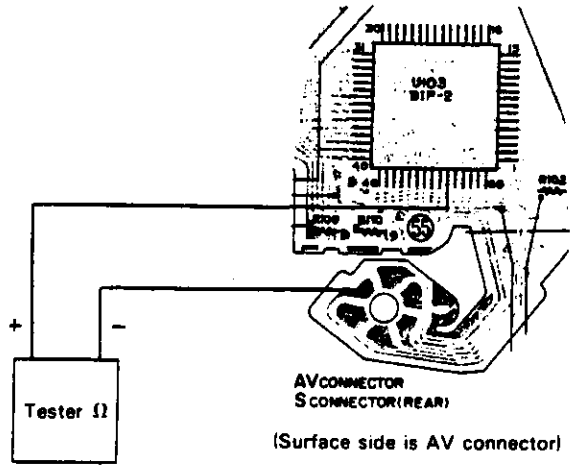 	Replace with new M circuit board (ZJ7090)
e. Others	(1) Short circuit of W motor ⊕ lead wire and upper plate (ZC6124) 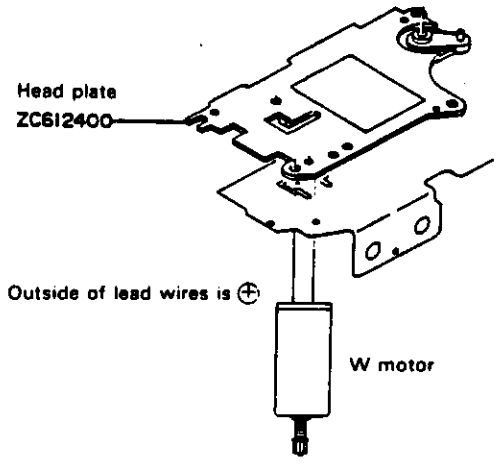 	Reform lead wire or repair soldering.
	(2) Removing of shutter blade Confirm it by seeing. Confirm it in the mirror box too by moving upwards the mirror with fingers.	Repair or replace the shutter. (ZC6135)

State	Cause and checking method	Measure
"1" is not indicated in the film counter.	(1) Imperfect contact of WFSW Measure resistance between black lead wire and purple lead wire shown at below figure, turning SW ring (ZC6118) located under the sprocket. If 0Ω → ∞ is repeated 3 times per 1 rotation of SW ring, WFSW is normal. 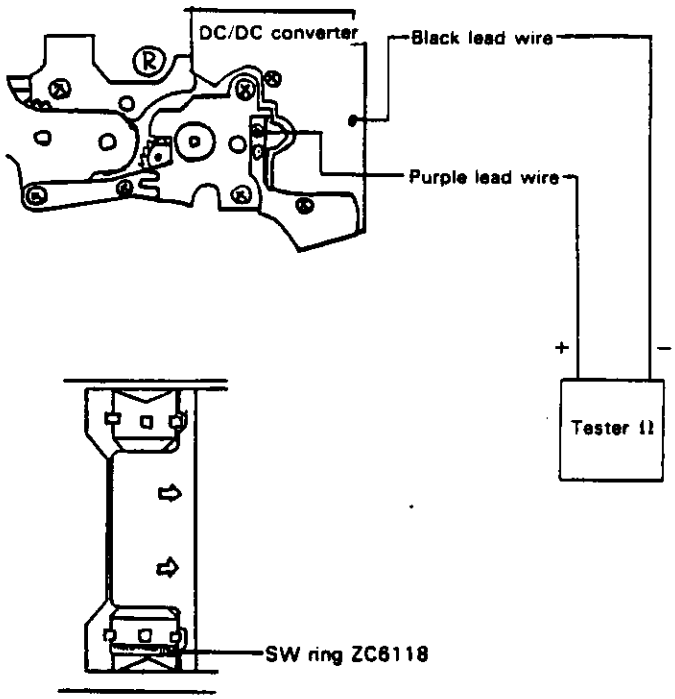 	Clean or replace WF SW. (assembled to ZJ7027)
	(2) Defect of E²P-ROM When trouble is not repaired in spite of completion of winding film and normal contact of WFSW, E²P-ROM is defective.	Replace with new DX circuit bord (ZC6122)

5.6 AF range finding

- Range finding starts by pressing the release button by half (turn on DISP SW).
  When focusing is set, green LED in the finder is turned on and shutter release is possible.
  When object has no contrast such as white wall or has repeating pattern, range finding is impossible, red LED in the finder is turned on and shutter release is locked.
  (Remark)
  Cause of "Lens cannot operate" in the defect of AF range finding is mainly same as the cause of "Lens cannot be set to ∞, when reset". So, check whether lens can be set to ∞ or not when the power switch is turned ON.
  If lens cannot be set to ∞, item of "Reset, lens cannot be set to ∞" should be checked first.

State	Cause and checking method	Measure
Range finding is impossible (lens does not operate)	(1) Signal of DISP SW is not input to MAIN CPU Measure voltage between MAIN CPU ⑩ and GND (body), when shutter release button is pressed by half. If it is 5.5～5.7V, voltage is allright. (Remark) If the above check is allright, items of (2)～(5) below is not required to check further. 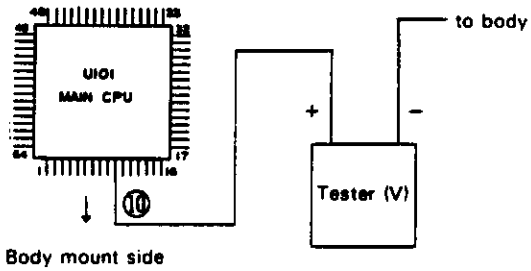 	Replace with new M circuit board (ZJ7090), when voltage is normal but lens does not operate.
	(2) Defect of the grip Check contact condition of DISP SW after removing the grip from the camera. Check resistance between the first contact and the second contact of the grip such as shown in below figure. If it is less than 5～6 Ω, the grip is normal. 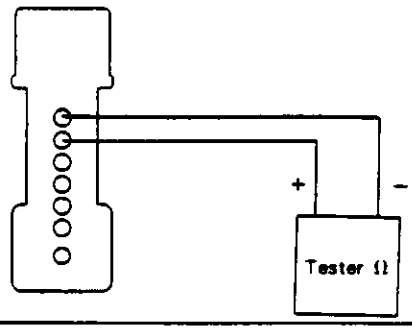 	Repair the grip.

State	Cause and checking method	Measure
Range finding is impossible (lens does not operate)	(3) Imperfect contact of B1 connector Check loosing and dirt of B1 connector. (4) Break of circuit pattern of B circuit (8) and DISP SW. If it is less than 5 ~ 6 Ω, B circuit board is normal. 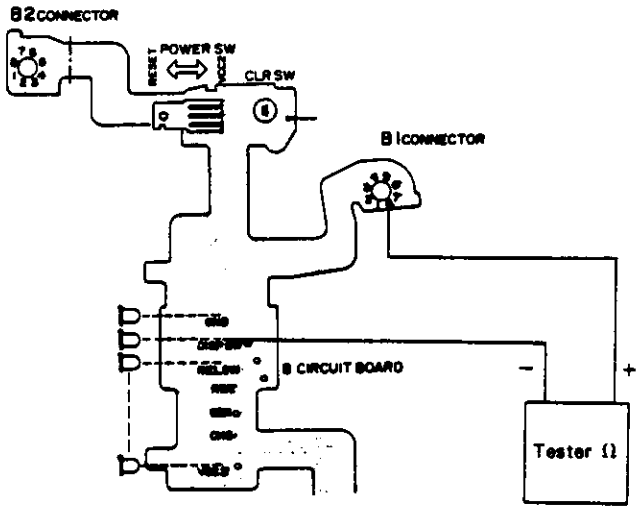 	Disassemble and clean B1 connector. Replace with new B-circuit board (ZC6129)
	(5) Imperfect contact of the grip and the camera	Clean contact
	(6) Defect of M circuit board If trouble is not repaired by the above measure, M circuit board is defective.	Repalce with new M circuit board (ZC7090)

State	Cause and checking method	Measure
Range finding is impossible (lens operates).	(1) Removing of the sub-mirror Check it by seeing, moving upwards the mirror with fingers. There are two cases in which the sub-mirror is removed from mirror frame or a spring of the sub-mirror is removed from mirror frame.	Repair or replace M-frame 2 (ZC6102)
	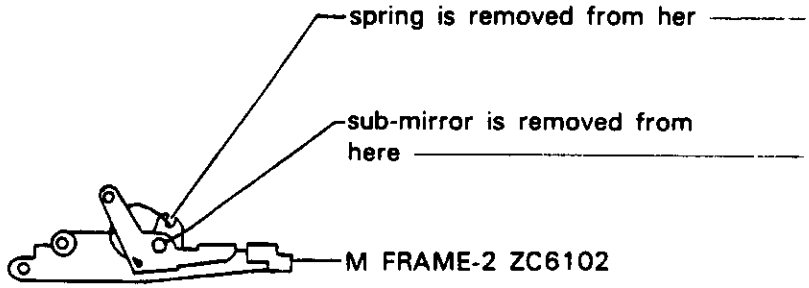	Reform the hook lest a spring should be removed. Insert a washer (NW2.1-140PO) between M frame and sub-mirror to improve fitting.
	(2) Imperfect contact of F1, F2 connector Check loosing and dirt of F1, F2 connector.	Disassemble and clean F1, F2 connector.
	(3) Imperfect contact of PIF connector Check loosing and dirt of PIF connector.	Disassemble and clean PIF connector.
	(4) Defect of PIF circuit board Replace with new circuit board as decision of good or defective is trouble.	Replace with new PIF circuit board (ZJ7045)
	(5) Defect of AF circuit board When trouble is not repaired by the above measure, AF circuit board is defective.	Replace with new F circuit board 2 (ZC6113)

State	Cause and checking method	Measure
Red LED is turned on in spite of setting of focus.	(1) Defect of assembling F2 connector Circuit patterns of F2 connector ② LEDOK and ③ LEDNG are made short, so red LED is turned on in spite of setting focus and the shutter is not released. Check resistance between two test point shown in below figure. If it is less than 5 ~ 6 Ω. F2 connector is normal. 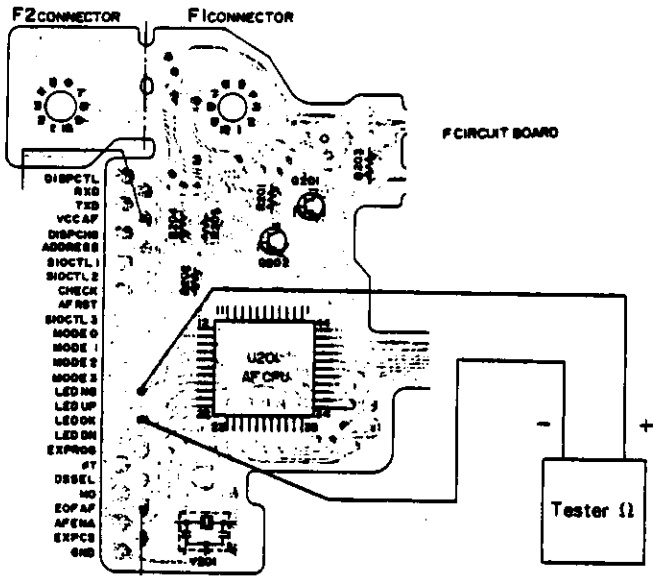 	Disassemble and reassemble F2 connector.
Inaccuracy of range finding.	(1) Imperfect setting of lens focus. (2) Imperfect setting finder focus. (3) Imperfect adjusting of AF.	Adjust lens focus. Adjust finder focus. Adjust AF

State	Cause and checking method	Measure
LED is not turned on.	(1) Imperfect contact of FD1 connector Check loosing and dirt of FD1 connector. (2) Defect of FD circuit board Apply voltage of 3V between FD1 connector ⑩ (+) and ③, ⑦ (−). If LED is turned on, FD circuit board is normal. (Remark) Looks like almost same color. 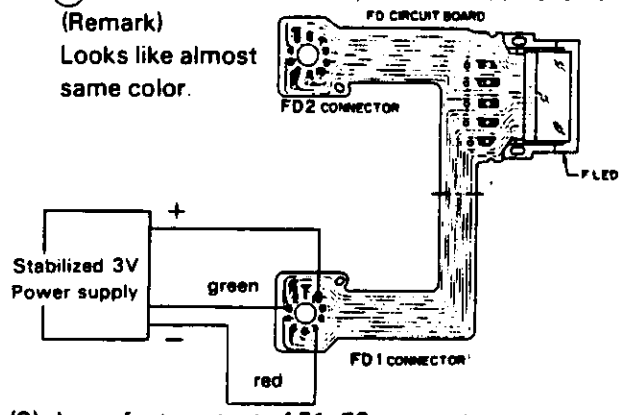 	Disassemble and clean FD1 connector. Replace with new FD circuit board (ZC6161)
	(3) Imperfect contact of F1, F2 connector Check loosing and dirt of F1, F2 connector.	Disassemble and clean F1, F2 connector.
	(4) Break of circuit pattern of M circuit board Check resistance mentioned below. If they are less than 5 ~ 6 Ω, M-circuit board is normal. FD1 connector ③ —— F2 connector ② FD1 connector ⑦ —— F2 connector ③ FD1 connector ⑩ —— F2 connector ⑧ 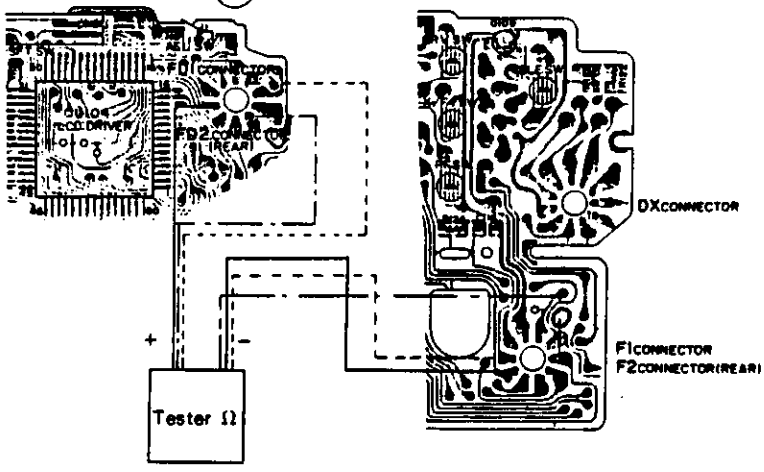 	Replace with new M circuit board (ZJ7090)
	(5) Defect of AF circuit board If trouble is not repaired, AF circuit board is defective.	Replace with new AF circuit board (ZC6113)

5.7 Mirror up

When the shutter release button is pressed perfectly (green LED in the finder is turned on) after setting focus, diaphragm is set to the value indicated in the finder and the mirror is moved to the top.

(Remark)

- Confirm whether the mirror does not move upward or does not move downward in case of stopping halfway of the mirror. If it cannot be confirmed, check both items.
- Check the item of "diaphragm ring is not returned" in case of non-returning of diaphragm ring.

State	Cause and checking method	Measure
The mirror does not move upward.	(1) Signal of REL SW is not input to MAIN CPU ⑲ Measure voltage between MAIN CPU ⑲ and GND (body), when the shutter release button is pressed perfectly. If it is less than 150～160mV, this is normal. (Remark) If the checking above mentioned is allright, the following items of (2)～(6) is not required to check further. 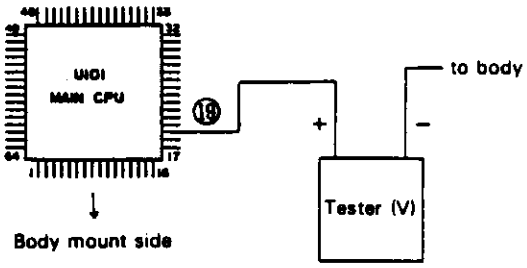 	Check the following items of (2)～(6).
	(2) Defect of the grip Check REL SW after removing the grip from the camera. Check resistance between No.1 contact and No.3 contact of the grip, when the shutter release button is pressed perfectly. If it is less than 5～6Ω, the grip is normal. 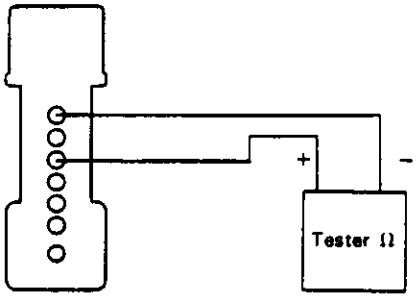 	Repair the grip.

State	Cause and checking method	Measure
The mirror does not move upward.	(3) Imperfect contact of B1 connector Check loosing and dirt of B1 connector. (4) Break of circuit pattern of B circuit board Check resistance between B1 connector ⑦ and REL SW (3rd from the top). If it is less than 5 ~6 Ω, B-circuits board is normal. 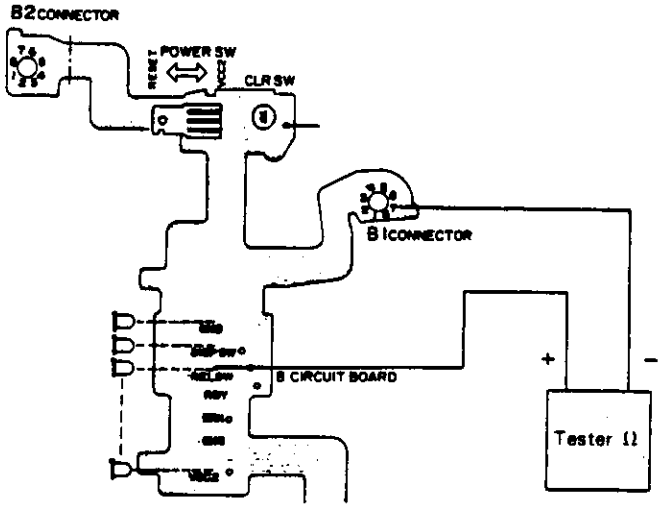 	Disassemble and clean B1 connector. Replace with new B circuit board (ZC6129)
	(5) Imperfect contact of the grip and the camera	Clean contacts
	(6) Defect of M circuit board If trouble is not repaired by measure mentioned above, M circuit board is defective.	Replace with new M circuit board (ZJ7090)
	(7) Defect of AF range finding If the shutter is released without lens, AF is defective. Check the item of "AF range finding".	Check the item of "AF range finding".

State	Cause and checking method	Measure
The mirror does not move upward.	(8) Signal of EOFAF is not input to MAIN CPU (30) Measure voltage between MAIN CPU (30) and GND (body) at immediately after of pressing the shutter button and after completion of range finding. If it varies from 5.5 ~ 5.7V to 50 ~ 60mV, this is normal. (Remark) If checking mentioned above is allright, the following items of (9) ~ (11) is not required to check. 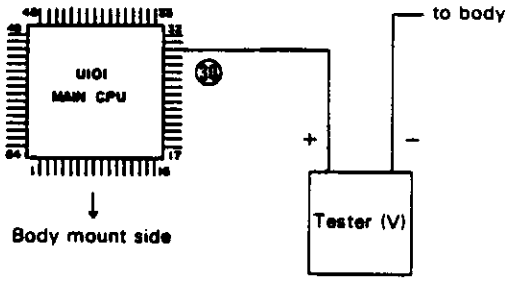 	Check the following items of (9) ~ (11).
	(9) Defect of AF circuit board Measure voltage between test point of EOFAF and GND (body) at immediately after of pressing the shutter button and after completion of range finding. If it varies from 5.5 ~ 5.7V to 50 ~ 60mV, this is normal. 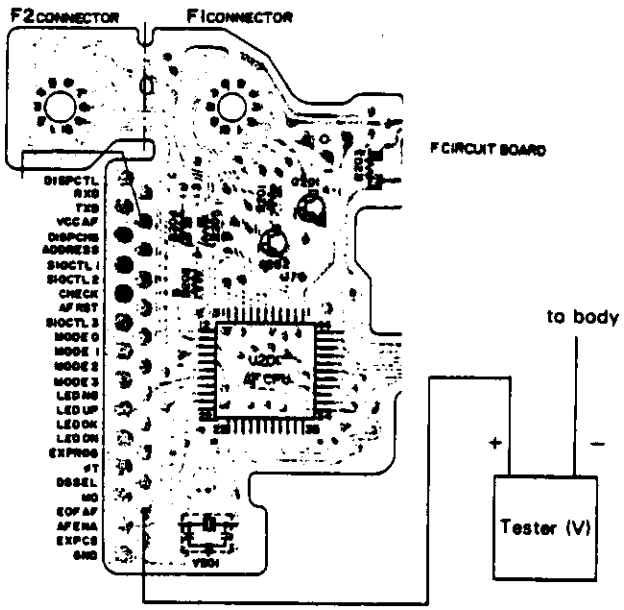 	Replace with new F circuit board (ZC6113).

State	Cause and checking method	Measure
The mirror does not move upward.	(10) Imperfact contact of F2 connector Check loosing and dirt of F2 connector.	Disassemble and clean F2 connector.
	(11) Defect of M circuit board If trouble is not repaired by measure mentioned above, M circuit board is defective.	Replace with new M circuit board (ZJ7090)
	(12) Defect of AV motor or AV motor gear unit Connect BP-2 (37) and GND (body), BP-2 (39) and MAIN CPU (41) each. If the mirror moves upward, AV motor and AV motor gear unit is normal. (Remark) Connection should be removed immediately after completion of moving upward of the mirror, lest AV motor and gears etc. should be damaged. 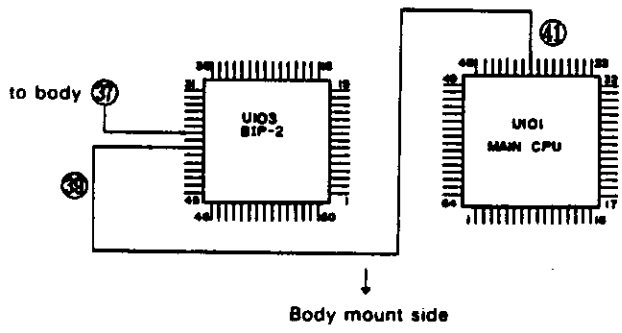 	Replace with new AV motor (ZC6103) or A base plate (ZC6103).
	(13) Defect of M circuit board If trouble is not repaired by measure mentioned above, M circuit board is defective.	Replace with new M circuit board (ZJ7090).
Defect of diaphragm aperture.	(1) Defect of the lens Check with the normal lens.	Repair the lens.

State	Cause and checking method	Measure
Defect of diaphragm aperture.	(2) Break or stop of gears of AV motor gear unit Check operation of diaphragm ring (ZC6104) by releasing the shutter without the lens. 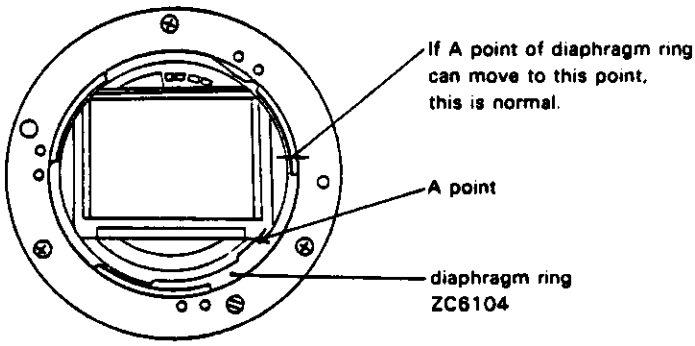 	Repair or replace A base plate (ZC6103).
	(3) Disconnection of MGA Apply voltage of 3V between red lead wire of MGA (+) and black lead wire (−), and release the shutter. If the mirror moves upward but the diaphragm ring does not move upward, this is normal. (Remark) · Checking should be done without the lens. · When the mirror moves downward diaphragm ring moves upward to the top. This is normal. 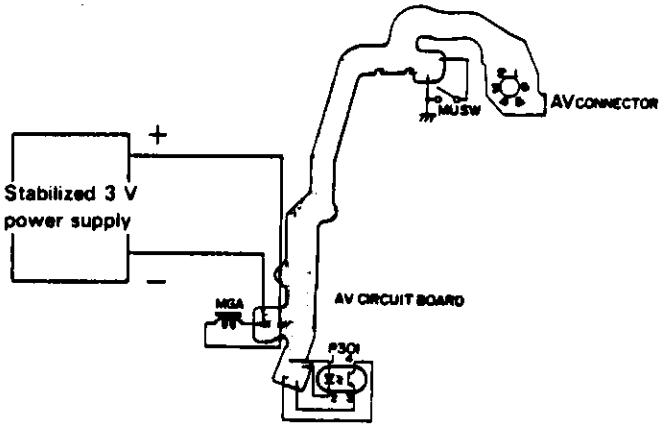 	Replace with new MG base plate 2 (ZC6156).
	(4) Imperfect contact of AV connector Check loosing and dirt of AV connector. (5) Defect of AV circuit board Replace with new board due to trouble of checking. (6) Defect of M circuit board If trouble is not repaired by measure mentioned above, M circuit board is defective.	Disassemble and clean AV connector. Replace with new board (ZJ7044). Replace with new M circuit board (ZJ7090).

5.8 AE control (EE control)

The first shutter curtain starts running after completion of moving upward of the mirror, and the same time integration starts. Integration will finish after being obtained adequate exposure, and the second shutter curtain starts running.

AE control is continued till completion of running of the second shutter curtain.

EE accuracy in each luminance is shown in the right table.

BV value	EE accuracy (EV)
15	0±0.6
11	0±0.4
7	0±0.4
4	0+0.3 −0.6

State	Cause and checking method	Measure
The first shutter curtain does not starts to run (the mirror moves upward).	(1) Short circuit of MU SW Measure resistance of MU SW in UP condition of the mirror, if it is less than 5~6Ω, MU SW is normal. 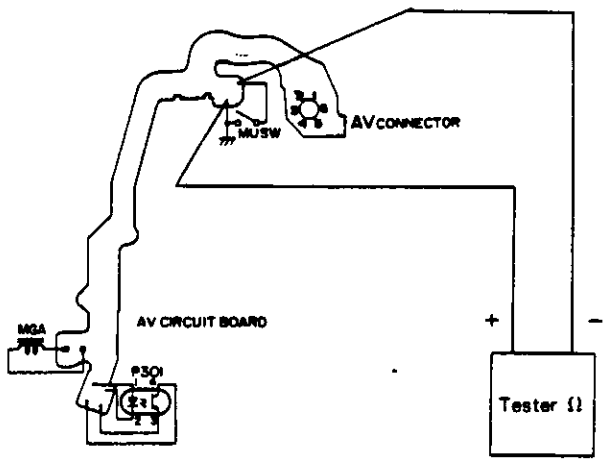 	Disassemble, clean, reform or replace MUSW (ZC6157, CF0091).
	(2) Defect of the shutter If the first shutter curtain (gray) does not run when battery is removed from the grip in UP condition of the mirror, the shutter is defective.	Replace with new shutter. (ZC6135)
	(3) Defect of M-circiut board If the first shutter curtain runs and the second shutter curtain can be seen when battery is removed from the grip in UP condition of the mirror, M-circuit board is defective.	Replace with new M circuit board (ZJ7090).

State	Cause and checking method	Measure
Inactivity of exposure	(1) Imperfect adjusting or disorder of shutter speed Replace with new shutter, when exposure is normal in low illumination but exposure is inactive in high illumination. (2) Disconnection of MGF, MGS Apply voltage of 4～6V between TV connection ① (+) and ②,③ (−), and voltage for the shutter is charged. a. The 1st shutter curtain runs and the shutter is opened when TV connector ② is disconnected. b. The 2nd shutter curtain runs and the shutter is closed when TV connector ③ is disconnected. If both checking mentioned above is allright, the shutter is normal. 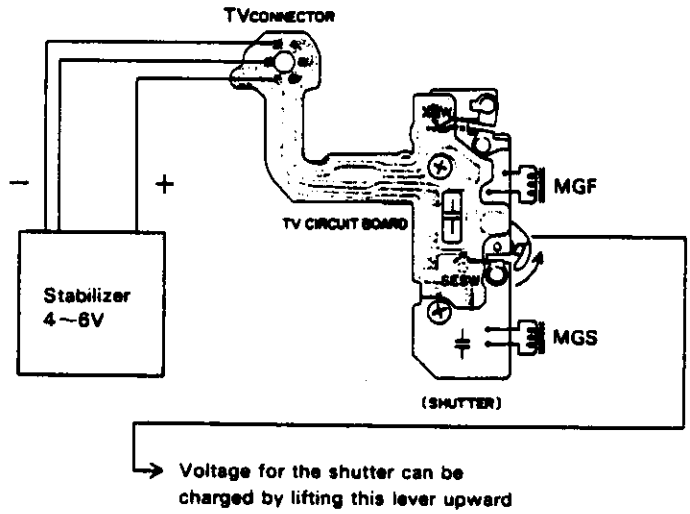 	Replace with new shutter (ZC6135)
	(3) Imperfect contact of TV connector Check loosing and dirt of TV connector.	Disassemble and clean TV connector.

State	Cause and checking method	Measure
Inactivity of exposure	(4) Defect of M circuit board If trouble is not repaired by measure mentioned above, M circuit board is defective.	Replace with new M circuit board (ZJ7090)
The shutter is left opening	(1) Defect of the shutter Remove a battery from the grip during opening of the shutter. If the shutter is closed, it is normal. (2) Defect of M circuit board If the shutter is normal, the other cause is defect of M circuit board.	Replace with new shutter. (ZC6135) Replace with new M circuit board (ZJ7090)
Inaccuracy of EE	(1) Lack of M lens (CF0240) Confirm existence of M lens by seeing. 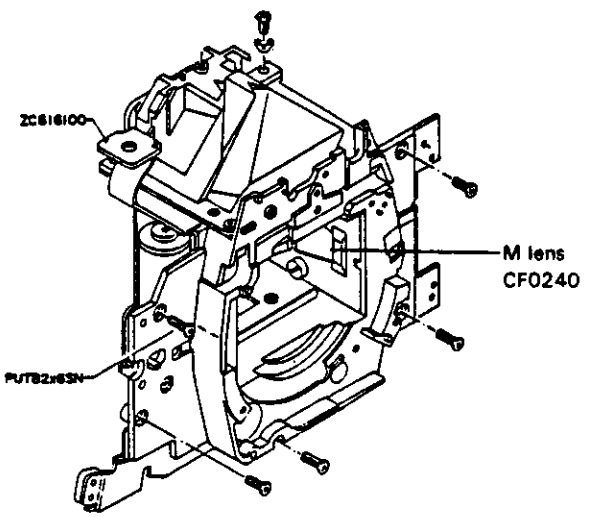 (2) Imperfect adjustment (3) Defect of M circuit board If adjustment is impossible, M circuit board is defective.	Attach M lens (CF0240) Adjust EE Replace with new M circuit board (ZJ7090)

5.9 Mirror down

The mirror is returned after completion of the 2nd shutter curtain running, and the diaphragm ring is moved upward to the top first, and it is returned.

State	Cause and checking method	Measure
The mirror does not start to operate (The mirror is in UP condition and the 2nd shutter curtain (black) can be seen.	(1) Short circuit of MUSW Measure resistance of MUSW in condition of stopping of mirror DOWN operation (UP condition). If it is less than 5 ~ 6 Ω, MUSW is normal. 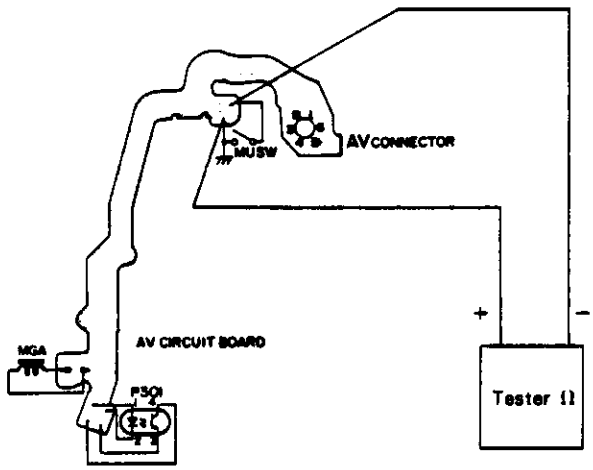 	Disassemble, clean, reform or replace MUSW. (ZC6157, CF0091)
	(2) Short circuit of SESW Measure voltage between BP-2 53 and GND (body). If it is 5.5 ~ 5.7V, SESW is normal. (Remark) Voltage should be measured within 30 sec. after releasing of the shutter. 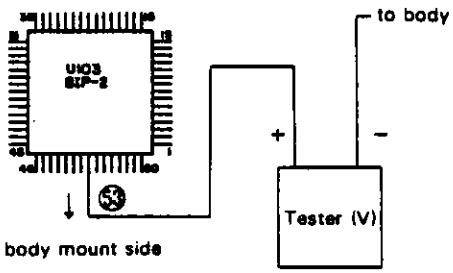 	Replace with new shutter. (ZC6135)
	(3) Defect of M circuit board If trouble is not repaired by measure mentioned above, M circuit board is defective.	Replace with new M circuit board. (ZJ7090)

State	Cause and checking method	Measure
The mirror stop halfway.	(1) Weak slip torque of A2 gear (ZJ7093) of AV motor Connect green lead wire of AV motor (+), white lead wire (−) to the stabilizer in UP condition of the mirror (no difficulty in condition of stopping of the mirror halfway), and apply voltage between these two point. Increase voltage gradually from 0V, and the mirror is returned. Further increase voltage, and A2 gear starts to slip. A2 gear must not slip absolutely halfway in mirror DOWN operation. Furthermore, increase voltage gradually after perfect returning of the mirror, and A2 gear starts to slip again. If voltage at this time is more than 2.5 ~ 3V, slip torque is normal. (Remark) · Apply voltage of reverse polarity to AV motor to move upward the mirror without removing fixing with the front casting. · A2 gear should not be slipped for a long time (within 2 ~ 3 sec.) least springs and washers etc. should be burned out. 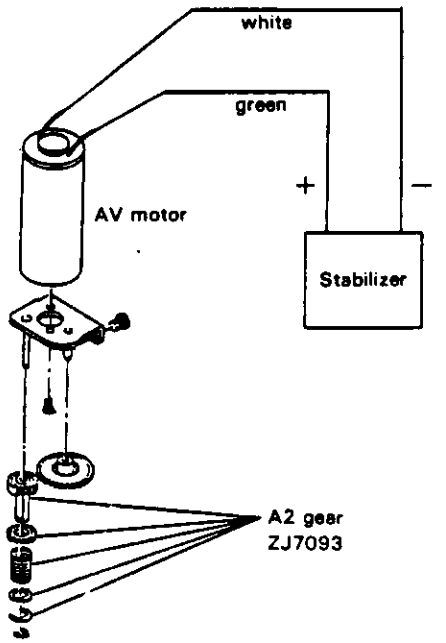 	Replace with new A2 gear. (ZJ7093)

State	Cause and checking method	Measure
Diaphragm ring is not returned	(1) Signal of AVSW is not input to BP-2 (54) Measure voltage between BP-2 (54) and GND (body). If it is less than 50～60mV, this is normal. If it is 5.5～5.7V, check the following items of (2)～(4). (Remark) ・Voltage should be measured within 30 sec. after releasing of the shutter. ・Measure voltage during absence of diaphragm ring. 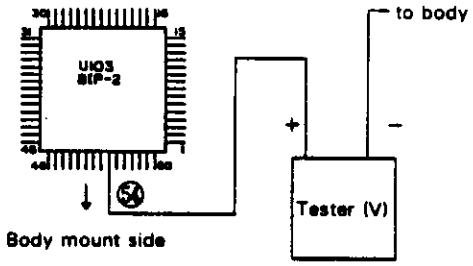 	Check the following items of (2)～(4).
	(2) Imperfect contact of AVSW Measure resistance of AVSW. If it is less than 5～6Ω, AVSW is normal. 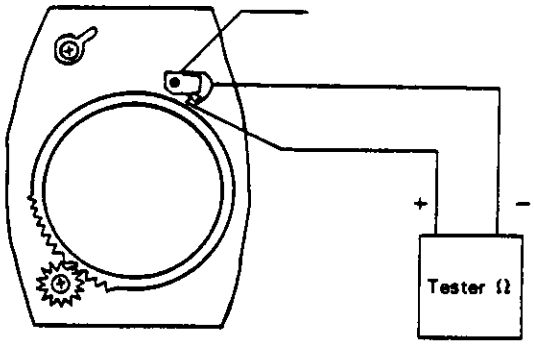 	Clean or replace AVSW (CF0245, CF0246)
	(3) Imperfect contact of S connector Check loosing and dirt of S connector. (4) Break of circuit pattern of S circuit board Check resistance between S connector (4) and AVSW. If it is less than 5～6Ω, S circuit board is normal. 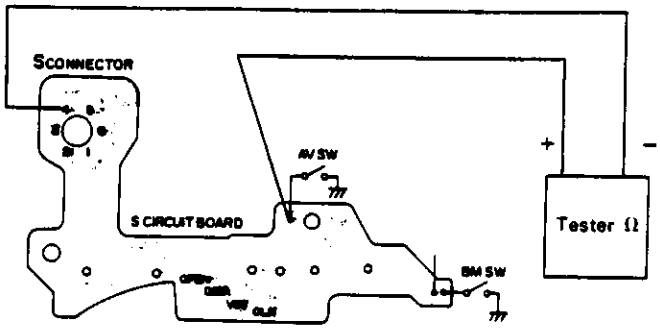 	Disassemble and clean S connect. Replace with new S circuit board. (CF0707)

State	Cause and checking method	Measure
Diaphragm ring is not returned	(5) Imperfect fitting of the diaphragm ring and A8 gear When "V" mark of A6 gear 1 is located at the position shown in the following figure, perfect fitting condition is as follows. 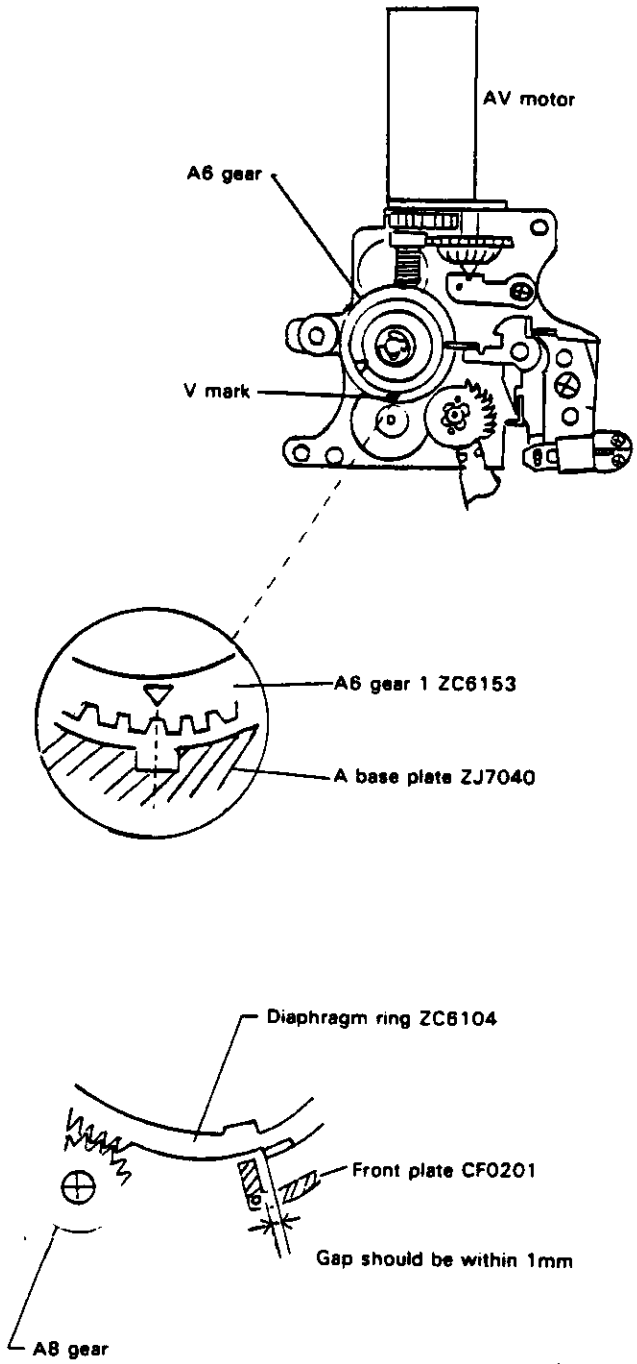 	Correct fitting

5.10 Winding

1 frame of a film is wound after completion of mirror DOWN operation.
(Remark)
Idle feeding should be normal.

State	Cause and checking method	Measure
Delay of timing	(1) Short circuit of AVSW Measure voltage between BP-2 (54) and GND (body). If it is less than 50~60mV, AVSW is short circuit condition. And if it is 5.5~5.7V, AVSW is normal. (Remark) · Voltage should be measured within 30 sec. after releasing of the shutter. · The diaphragm ring should be returned. 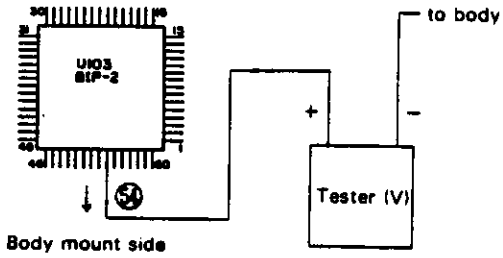 	Disassemble and clean or replace AVSW (CF0245, CF0246)
R mark is turned on in the course of winding.	(1) The spool does not rotate. Break or lack of 52 gear, 6 gear, spool. 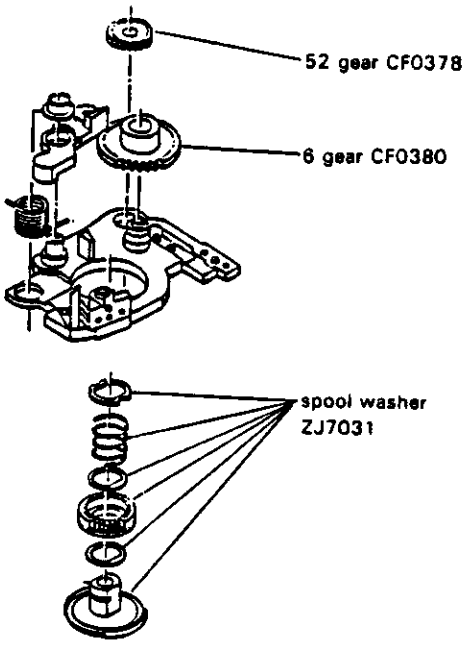 	Replace or fill up 52 gear (CF0378), 6 gear (CF0380), spool washer (ZJ7031)

State	Cause and checking method	Measure
R mark is turned on in the course of winding.	(2) Imperfect contact of WFSW Measure resistance between black lead wire and purple lead wire shown in the following figure, rotating SW ring (ZC6118) under the sprocket. If 0Ω ~∞Ω is repeated 3 times per 1 rotation of SW ring, WFSW is normal. 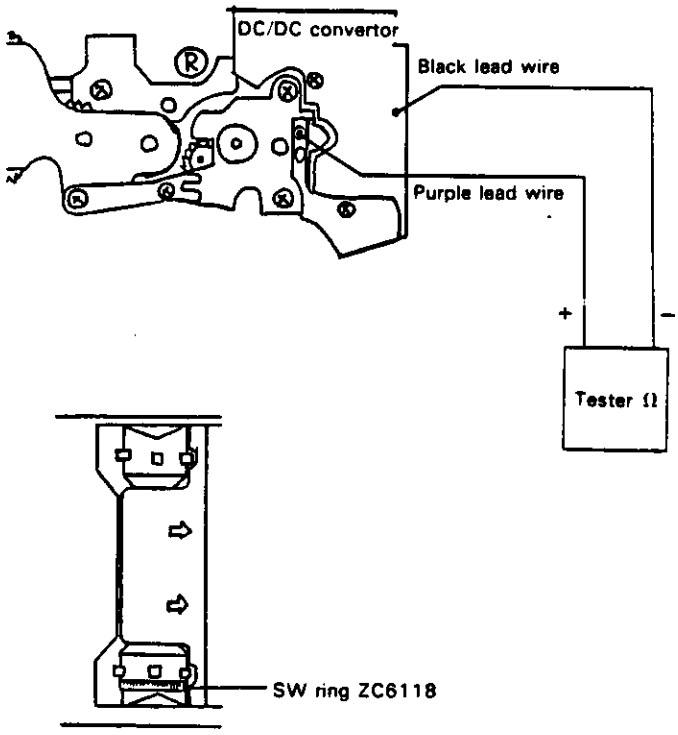 	Clean or replace MFSW. (assembled to ZJ7027)
	(3) Imperfect contact of MUSW Measure resistance between pink lead wire and GND (body). If it is less than 5 ~ 6Ω, MUSW is normal. (Remark) Film winding should be completed. 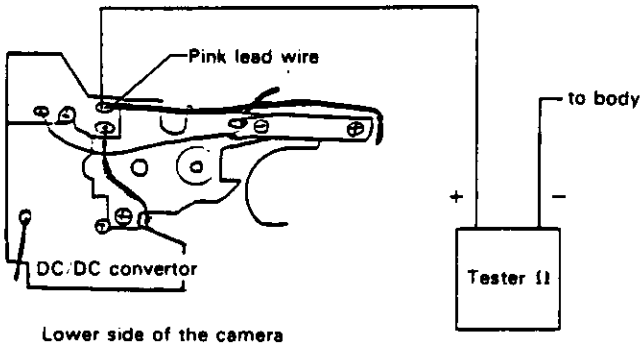 	Clean, adjust or replace WFSW. (assembled to ZJ7027)

5.11 Film counter

Figure of film counter indicated in the LCD panel should be increased one by one every time 1 frame is wound, and the figure should be indicated despite turning OFF of the power SW. And R mark is indicated end of the film.

State	Cause and checking method	Measure
Film counter is not advanced	(1) Imperfect contact of WFSW Measure resistance between black lead wire and purple lead wire shown in the following figure, rotating SW ring (ZC6118) under the sprocket. If 0Ω ~∞Ω is repeated 3 times per 1 rotation of SW ring, WFSW is normal. 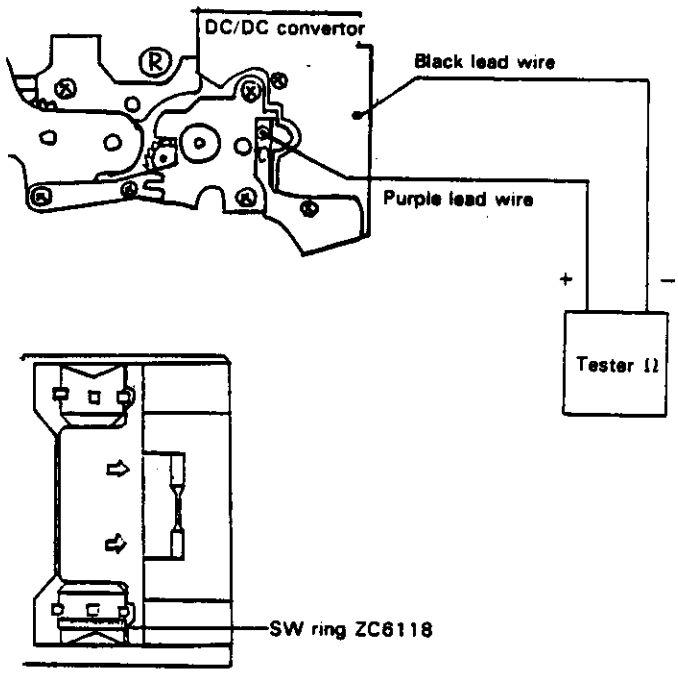 	Clean or replace WFSW. (assembled to ZJ7027)
When the power SW is turned OFF, the former figure is not indicated.	(1) Defect of E²PROM Replace with new DX circuit board. (2) Defect of M circuit board If trouble is not repaired despite replacing of DX circuit board, M circuit board is defective.	Replace with new DX circuit board (ZC6122) Replace with new M circuit board. (ZJ7090)

5.12 Rewinding

Rewinding starts by pressing R button, and winding operation is done 1 time after completion of rewinding, and film counter is reset to 0.

State	Cause and checking method	Measure
Rewinding is impossible (motor rotates)	(1) Break of R3 gear Confirm it by seeing after removing the bottom plate. 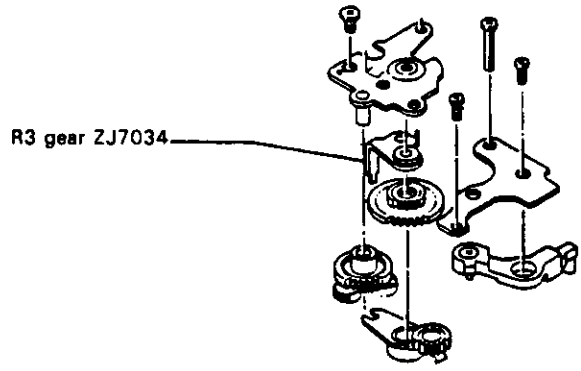 	Replace with new R3 arm. (ZJ7034)
	(2) Imperfect fixing of R9 shaft and R9 gear R9 gear should not slide around R9 shaft. R9 gear is located under DX circuit board. 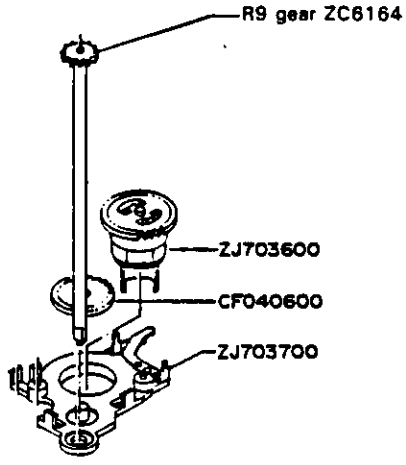 	Replace with new R9 gear. (ZC6164)

State	Cause and checking method	Measure
Rewinding is impossible (motor does not rotate)	(1) Imperfect contact of RWSW Measure voltage between MAIN CPU (13) and GND (body) when R button is pressed. If it is less than 5 ~ 6mV, RWSW is normal. (Remark) The rear cover should be closed. 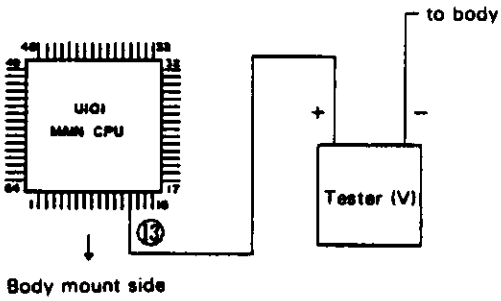 	Clean or replace RWSW. (assembled to ZJ7038)
	(2) Defect of M circuit board If rewinding does not start despite normal state of RWSW, M circuit board is defective.	Replace with new M circuit board (ZJ7090)

6. TROUBLE SHOOTING CONCERNING THE FLASH

6.1 When the Flash grip 300 (AGP-12) is used

· Charging starts by pop-up of the Flash luminous section, and " ϟ " mark is turned on in the finder after completion of chargin. (charging lump is turned on)
When environment illumination is darker than that of adequate shutter speed of 1/100 in natural illumination, shutter speed is fixed to 1/100, and exposure value is decided by GNo/Distance. (refer to ① of the right figure)
When environment illumination is more bright than that of 1/100, shutter speed is same as the ordinary programed EE, and the Flash does not operate. (refer to ② of the right figure)
(Remark)
The Flash grip is charged only during turning on of LCD in the finder, and is not charged during turning off of LCD.

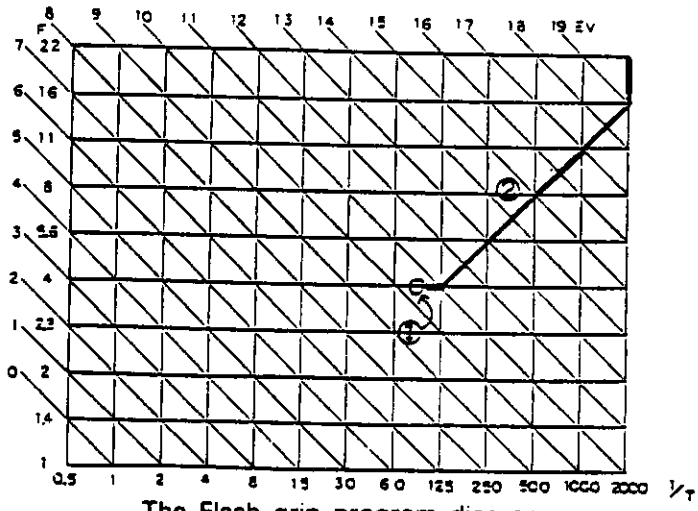

The Flash grip program diagram
(when AZ-3570 is used)

State	Cause and checking method	Measure
The flash is not charged	(1) Defect of the Flash grip 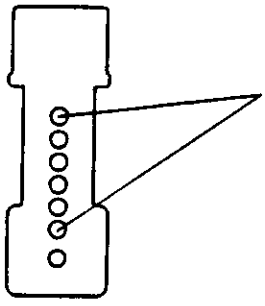 Make pop-up of illuminous section, and make short circuit between 2 contacts. If the Flash is charged, it is normal.	
	(2) Imperfect contact of the camera body and the grip or imperfect fitting. Check fitting condition and dirt of contacts.	Clean contacts or repair fitting.
	(3) Imperfect contact of B1 connector Check loosing and dirt of B1 connector.	Disassemble and clean B1 connector

State	Cause and checking method	Measure
cannot be charged	(4) Break of circuit pattern of B circuit board Check resistance between B1 ④ connector and CHG. If it is less than 5 ~ 6 Ω, B circuit board is normal. 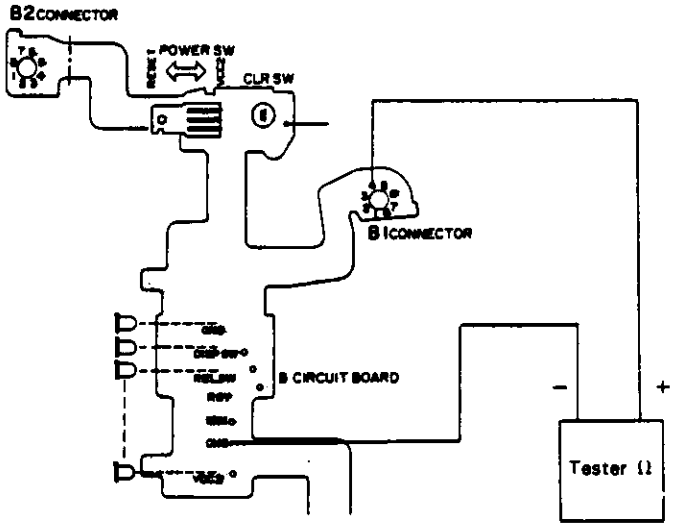 	Replace with new B circuit board. (ZC6129)
	(5) Defect of M circuit board If trouble is not repaired even by measure mentioned above, M circuit is defective.	Replace with new M circuit board (ZJ7090)
cannot be flashed	(1) "ON" signal of XSW is not input. Release the shutter, after setting PF (power focus) mode and attaching the lens cap. If it is less than 5 ~ 6 Ω, this is normal. (Remark) If check mentioned above is allright, the following items of (2) ~ (4) is not required to check. 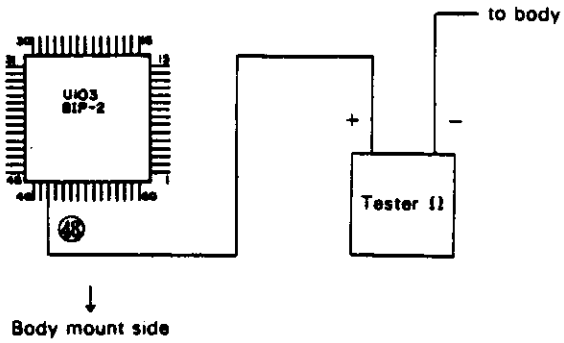 	Check the following items of (2) ~ (4).
	(2) Imperfect contact of TV connector Check loosing and dirt of TV connector.	Disassemble and clean TV connector.

State	Cause and checking method	Measure
cannot be flashed	(3) Imperfect contact of XSW Check resistance between TV connector ④ and GND (body) in condition after completion of running of the front curtain, and also check it in condition of completion of shutter releasing voltage. If the former is 0Ω and the later is ∞Ω, XSW is normal. 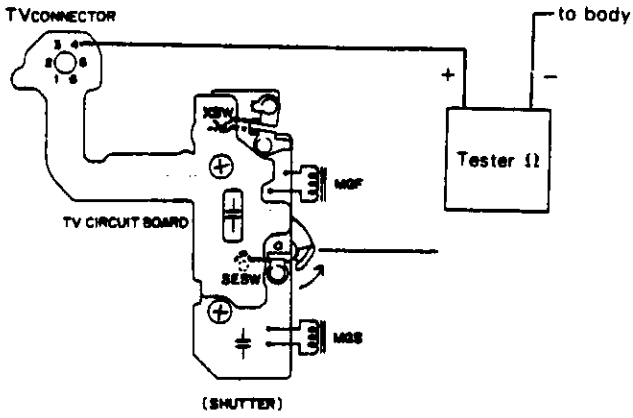 	Clean XSW, or replace with new shutter. (ZC6135)
	(4) Defect of M circuit board If "ON" signal of XSW is not input despite normal condition of items of (2)~(3), M circuit board is defective. (5) Defect of the Flash grip 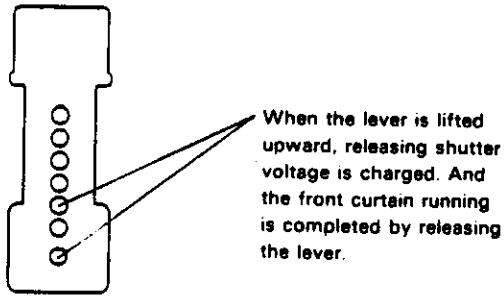 	Replace with new M circuit board. (ZJ7090) Repair the Flash grip
	(6) Imperfect contact or fitting between the camera body and the grip Check fitting condition and dirt of contacts. (7) Imperfect contact of B1 connector Check loosing and dirt of B1 connector.	Clean contacts or repair fitting. (refer to P-6) Disassemble and clean B1 connector.

State	Cause and checking method	Measure
cannot be flashed	(8) Break of circuit pattern of B circuit board Check resistance between B1 connector ⑤ and GRX. If it is less than 5 ~ 6 Ω, B circuit board is normal. 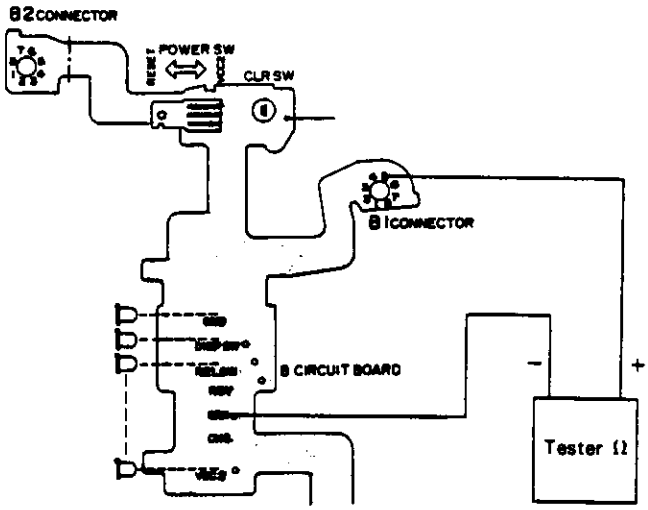 	Replace with new B circuit board. (ZC6129)
	(9) Defect of M circuit board If trouble is not repaired even by measure mentioned above, M circuit board is defective.	Replace with new M circuit board. (ZJ7090)
" ϟ " mark is not turned on in the finder	(1) RDY (completion of charging) signal is not input to MAIN CPU ⑰ Measure voltage between MAIN CPU ⑰ and GND (body). If the voltage is value mentioned below, this is normal. before completion of charging ..... 5.5 ~ 5.7V after completion of charging ..... 2.5 ~ 3V (Remark) · LCD in the finder should be turned on. · If check mentioned above is allright, the following items of (2) ~ (6) is not required to check. 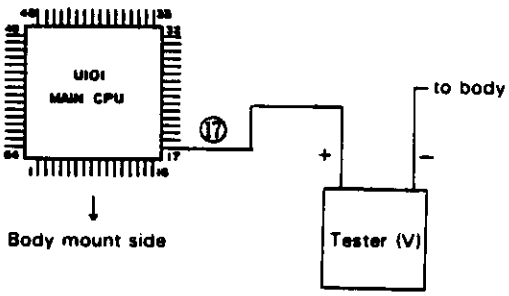 	Check the following items of (2) ~ (6).

State	Cause and checking method	Measure
" ϟ " mark is not turned on in the finder	(2) Defect of the Flash grip Measure voltage between 2 contacts shown in the following figure. If it is same as the battery voltage (about 6V), the Flash grip is normal. 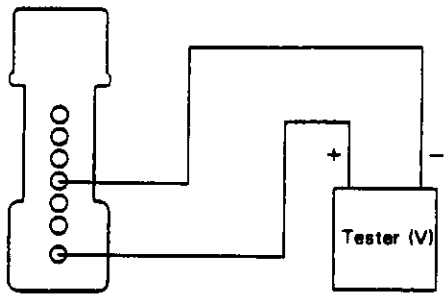 	Repair the Flash grip.
	(3) Imperfect contact or fitting between the camera body and the grip Check fitting condition and dirt of contacts.	Clean contacts or repair fitting. (refer to P-6)
	(4) Imperfect contact of B1 connector Check loosing and dirt of B1 connector. (5) Break of circuit pattern of B circuit board Check resistance between B1 ⑥ connector and RDY. If it is less than 5 ~ 6 Ω, B circuit board is normal. 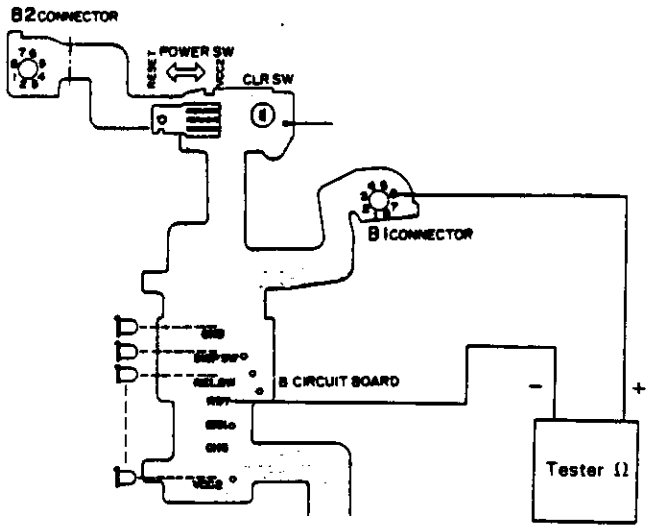 	Disassemble and clean B1 connector. Replace with new B circuit board. (ZC6129)
	(6) Defect of M circuit board If RDY signal is not input to MAIN CPU ⑰ despite normal condition of (2) ~ (5) mentioned above. M circuit board is defective.	Replace with new M circuit board. (ZJ7090)

State	Cause and checking method	Measure
" ⚡ " mark is not turned on in the finder	(7) Imperfect contact of FD1, FD2 connector Check loosing and dirt of FD1, FD2 connector. (8) Defect of FD circuit board Replace with new FD circuit board. (9) Defect of M circuit board If trouble is not repaired even by replacing of FD circuit board, M circuit board is defective.	Disassemble and clean FD1, FD2 connector. Replace with new FD circuit board. (ZC6161) Replace with new M circuit board. (ZJ7090)
Exposure reduce to the lowest value some times	(1) Defect of M circuit board Replace with new M circuit board, when exposure reduce to the lowest value sometimes in case of using the Flash grip. (Remark) Replace with new M circuit board with ROM 3 surely.	Replace with new M circuit board. (ZJ7090)

6.2 When F280 is used

- When environment illumination is darker than that of adequate shutter speed of 1/60 in natural illumination after completion of charging of F280, " ϟ " mark is turned on in the finder, and shutter speed is fixed to 1/100, diaphragm value is fixed to F4 (when opening F value of the lens is darker than F4, it is fixed to F value), TTL direct measuring is adopted.
  (region of ① in the right figure)
  And when environment illumination is more bright than 1/60, "ϟϟ" mark is turned on in the finder, shutter speed and diaphragm value are decided according as program diagram shown right, and the Flash is fired.
  (region of ② in the right figure)
- Firing by the Flash grip should be allright.
- F280 should be set to "NORMAL".

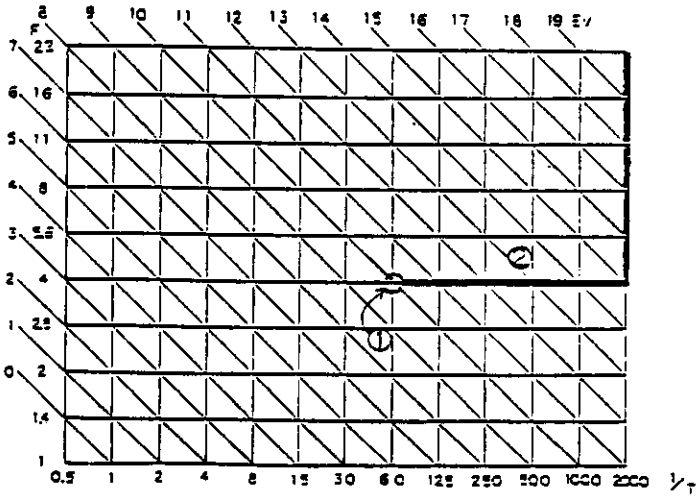

Program Diagram of the Flat firing Flash
(when AZ-3570 is used)

State	Cause and checking method	Measure
cannot be fired	(1) Imperfect contact of FL connector Check loosing and dirt of FL connector. (2) Defect of FL circuit board Replace with new FL circuit board. (3) Defect of M circuit board If trouble is not repaired even by replacing of FL circuit board, M circuit board is defective.	Disassemble and clean FL connector. Replace with new FL circuit board. (ZC6168) Replace with new M circuit board. (ZC7090)
Flash control is impossible	(1) Imperfect contact of FL connector Check loosing and dirt of FL connector. (2) Defect of FL circuit board Replace with new FL circuit board. (3) Defect of M circuit board If trouble is not repaired even by replacing of FL circuit board, M circuit board is defective.	Disassemble and clean FL connector. Replace with new FL circuit board. (ZC6168) Replace with new M circuit board. (ZJ7090)

State	Cause and checking method	Measure
The Flash can not be fired when " ϟ " mark is turned on, in illumination of between " ϟ " mark and " ϟϟ " mark.	(1) Difference of indication in the finder and actual exposure time (actual exposure time is shorter than the other) As exposure complete signal is earlier than XSW ON signal in such illumination as " ϟϟ " mark is about to switched to " ϟ " mark of indication in the finder, the flash cannot fire. Both EE and indication should be adjusted to inclination of plus within specification, when repaired. (Remark) Confirm that the Flash does not fire in 1/125 with the Flash grip after adjusting.	Adjust indication and EE.

7. TROUBLE SHOOTING CONCERNING FILM SCRATCH

7.1 A film is scratched at end of it when 36 EXP film is used.

Cause..... A film is scratched by contacting the guide spring A of rear cover side to film base.
Measure..... Attach the guide spring A to reverse direction, and also attach the SK roller 2 as addition.

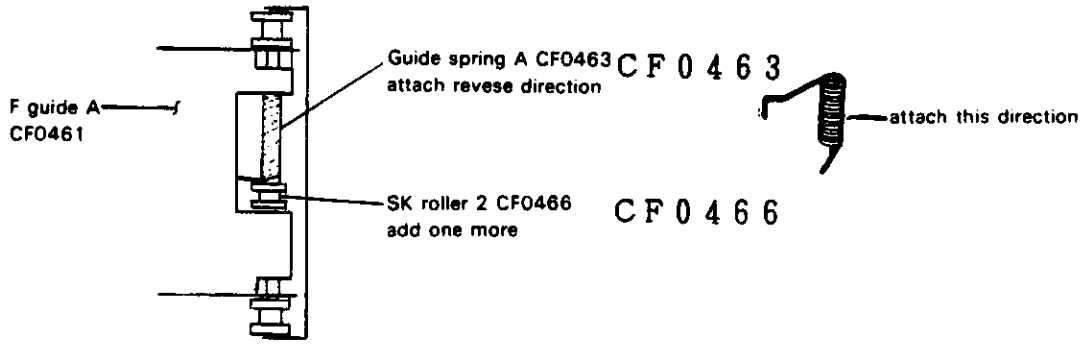

7.2 A film base is scratched

Cause..... F guide A, F roller A, F roller B or pressing plate are scratched.
Measure..... Replace with new F guide A etc.

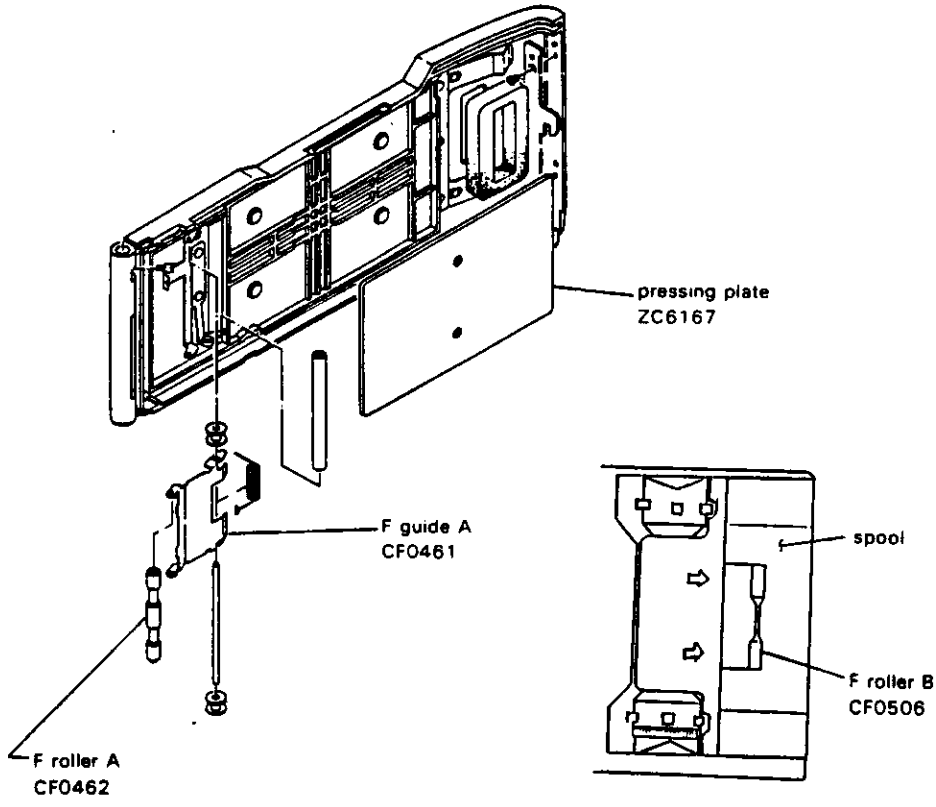

8. TROUBLE SHOOTING CONCERNING MODE SWITCHING

Operation Mode of this camera is as follows.

- AF/PF
- ⚡ F4
- DRIVE (SINGLE, CONT.)
- SELF TIMER
- AE LOCK
- PF/PROGRAM SHIFT
- RESET

When each point on the M circuit board in the figure shown below and GND (body) are made short circuit respectively,

a. Mode is switched ..... Imperfect contact of each switch

b. Mode is not switched..... M circuit board is defective. Replace with new M circuit board.

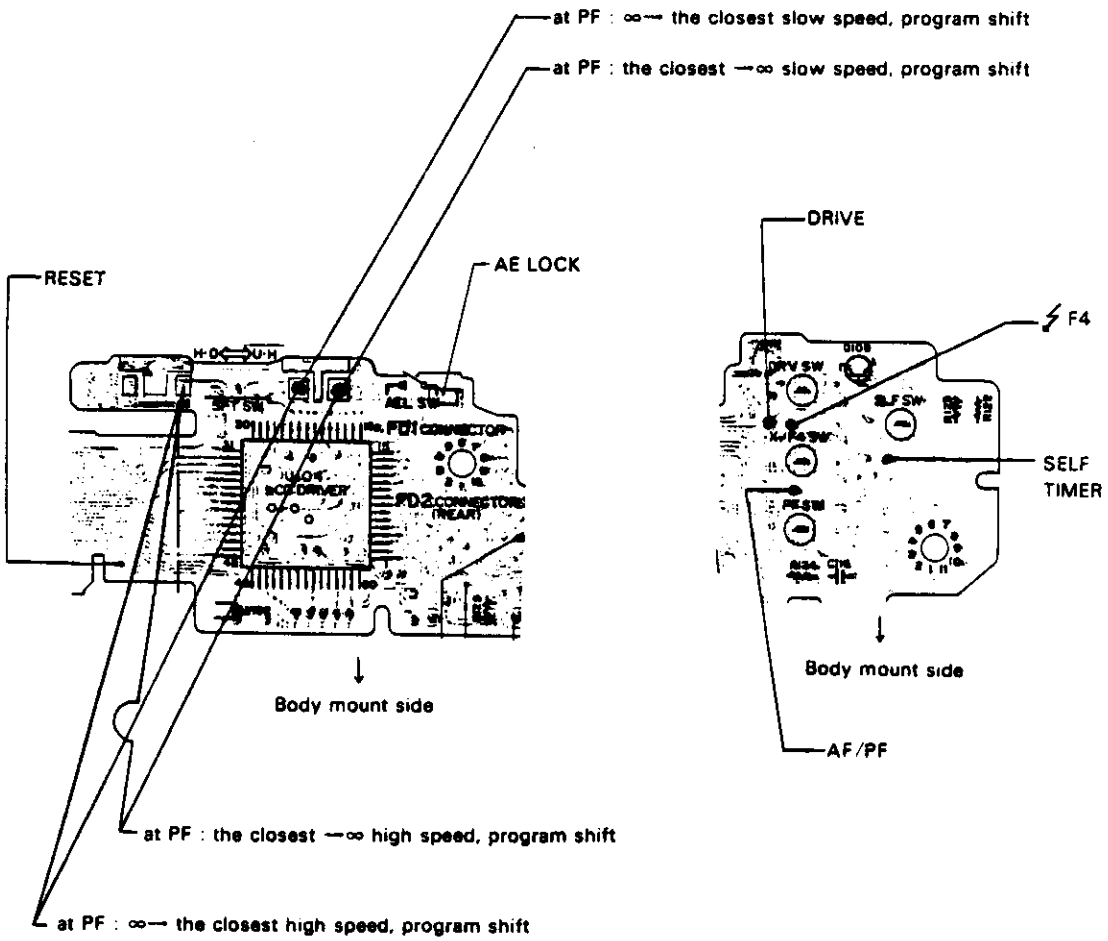

Trouble shooting concerning battery consumption for a short time

Consumed current

· Power SW is turned OFF	: less than 1 μA
Power SW is turned ON (during indication by LCD in the F)	: 90 ±35 mA
· Power SW is turned ON (during non-indication by LCD in the F)	: 30 ±30μA
· during film winding	: 450±150 mA
· during film rewinding	: 400±120 mA
· during AF operation (AS5018 is used)	: 330±100 mA
· during operation of mirror and diaphragm	: 500±150 mA

Checking method

(1) Reform the battery cover of the grip as shown in the below figure, and make the jig.

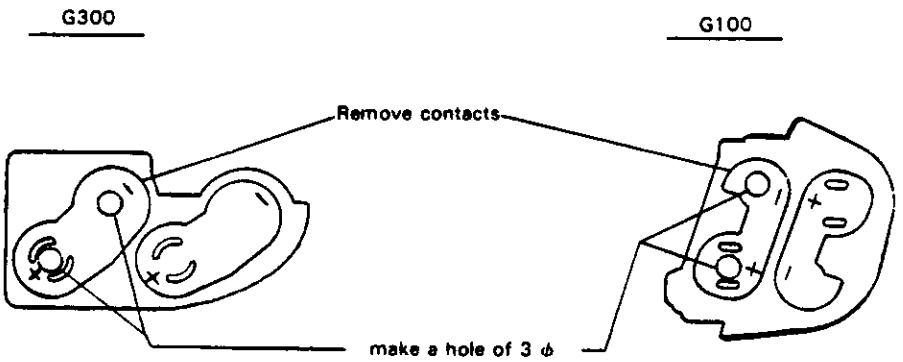

(2) Load the battery into the grip and attach the cap (shown in the above) to it, then connect it to the tester as shown in the below figure.

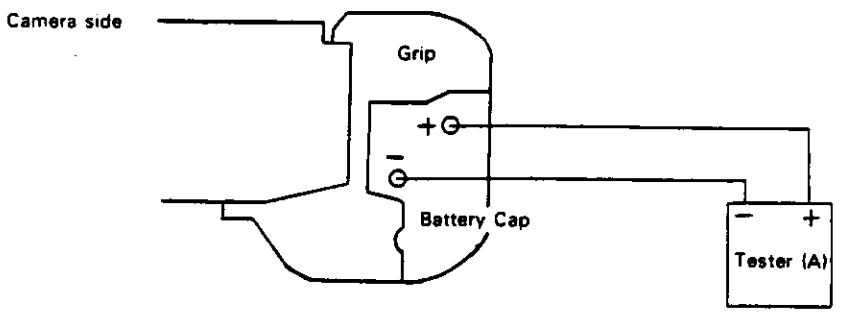

(Remark)

· Before checking consumed current of the camera, check the grip as single type. If the grip is defective, repair it.

· Battery consumption for a short time has not been occured at this stage except Imperfect adjustment of battery checking voltage of M circuit.

The specification and checking method only are described here.

ADS1 WIRING DIAGRAM

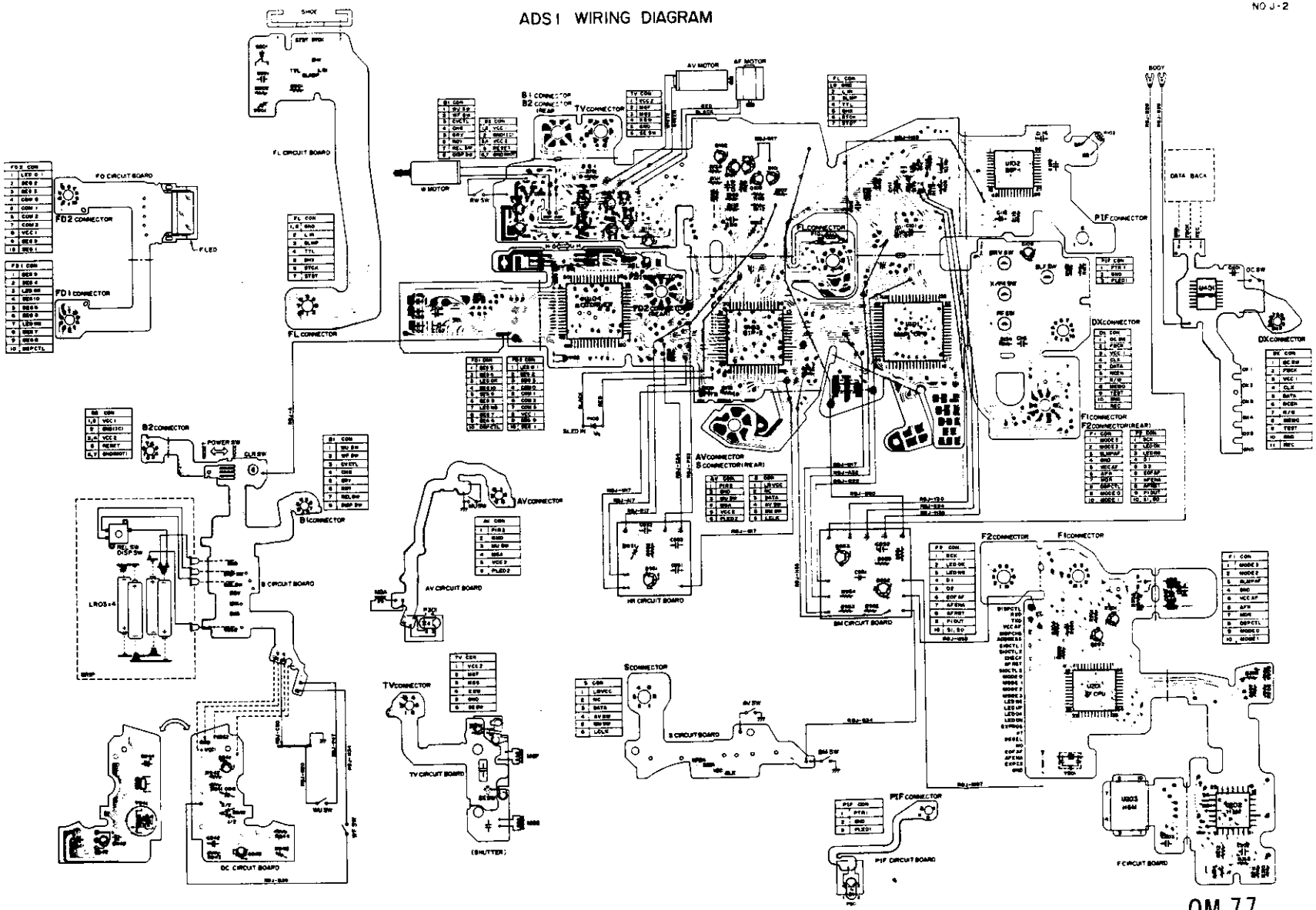

ADS I

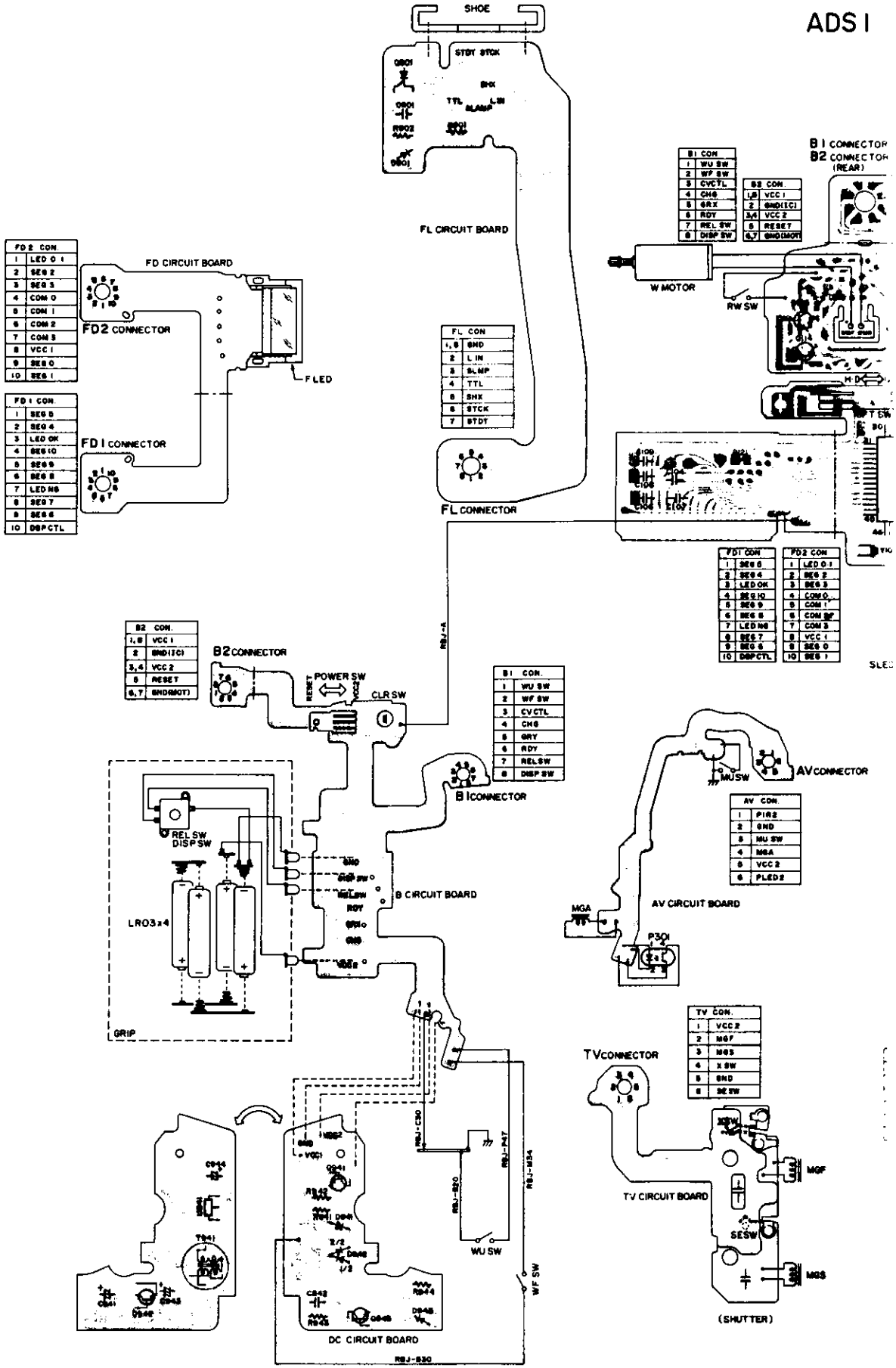
SHOE
STDY STCK
SHX
TTL
L IN
SLAMP
FL CIRCUIT BOARD
FL CONNECTOR
FL CON
1,8 GND
2 L IN
3 SLMP
4 TTL
5 SHX
6 STCK
7 STDT
FD CIRCUIT BOARD
FD2 CONNECTOR
FD1 CONNECTOR
F LED
FD2 CON.
1 LED 0 1
2 SEG 2
3 SEG 3
4 COM 0
5 COM 1
6 COM 2
7 COM 3
8 VCC 1
9 SEG 0
10 SEG 1
FD1 CON.
1 SEG 5
2 SEG 4
3 LED OK
4 SEG 10
5 SEG 9
6 SEG 8
7 LED NG
8 SEG 7
9 SEG 6
10 DSP CTL
B1 CONNECTOR
B2 CONNECTOR
(REAR)
B1 CON
1 WU SW
2 WF SW
3 CVCTL
4 CHG
5 GRY
6 RDY
7 REL SW
8 DISP SW
B2 CON.
1,8 VCC 1
2 GND(IC)
3,4 VCC 2
5 RESET
6,7 GND(MOT)
W MOTOR
RW SW
FD1 CON.
1 SEG 5
2 SEG 4
3 LED OK
4 SEG 10
5 SEG 9
6 SEG 8
7 LED NG
8 SEG 7
9 SEG 6
10 DSP CTL
FD2 CON
1 LED 0 1
2 SEG 2
3 SEG 3
4 COM 0
5 COM 1
6 COM 2
7 COM 3
8 VCC 1
9 SEG 0
10 SEG 1
B2 CONNECTOR
POWER SW
RESET
VCC2
CLR SW
B1 CONNECTOR
REL SW
DISP SW
LR03x4
GRIP
B CIRCUIT BOARD
AV CONNECTOR
MU SW
AV CON.
1 PIR2
2 GND
3 MU SW
4 MGA
5 VCC 2
6 PLED2
AV CIRCUIT BOARD
MGA
P301
TV CON.
1 VCC 2
2 MGF
3 MGS
4 X SW
5 GND
6 SE SW
TV CONNECTOR
TV CIRCUIT BOARD
MGF
SESW
MGS
(SHUTTER)
WU SW
WF SW
DC CIRCUIT BOARD

WIRING DIAGRAM

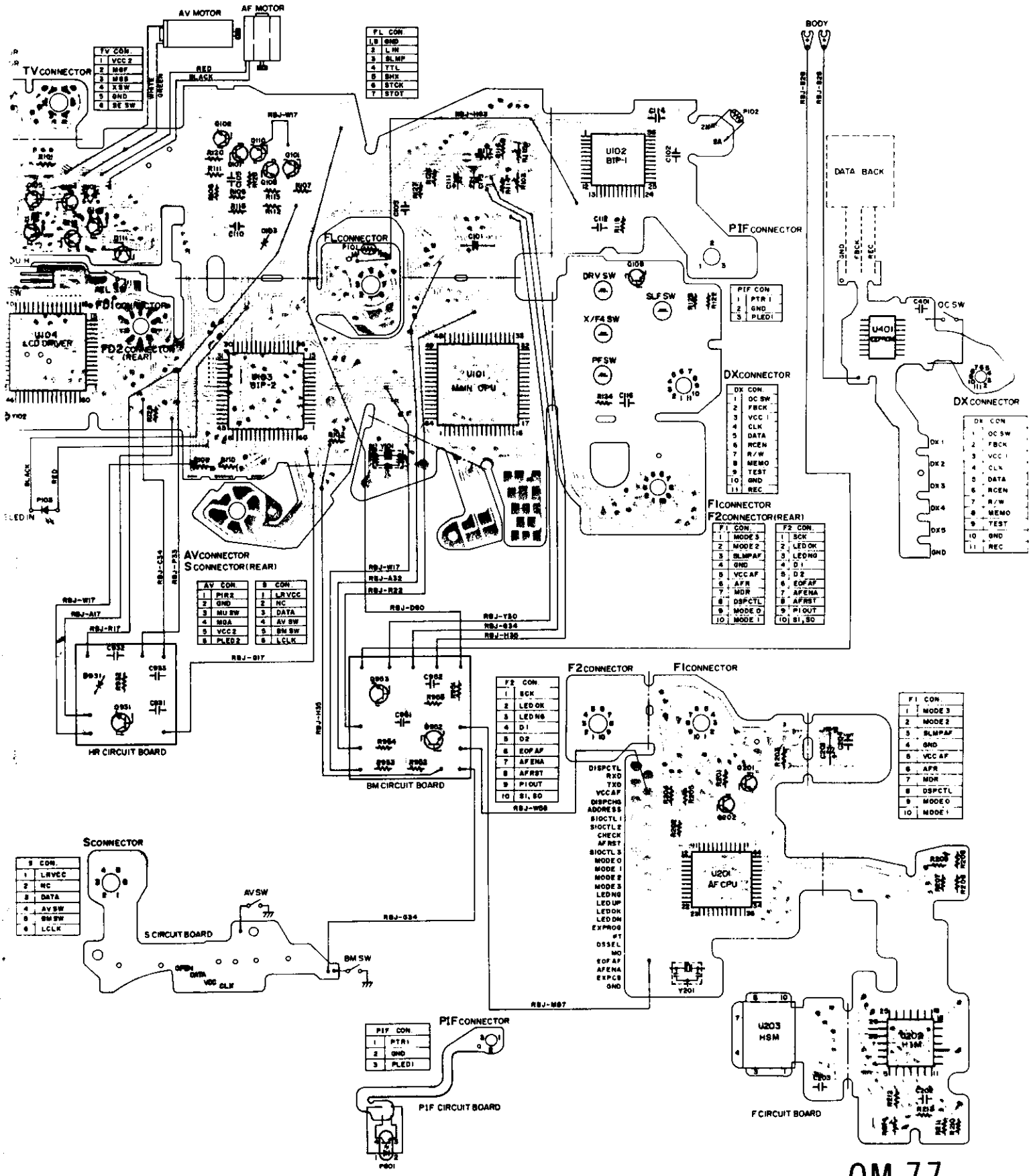

OM 77

ADS1 CIRCUT DIAGRAM

No.J-1

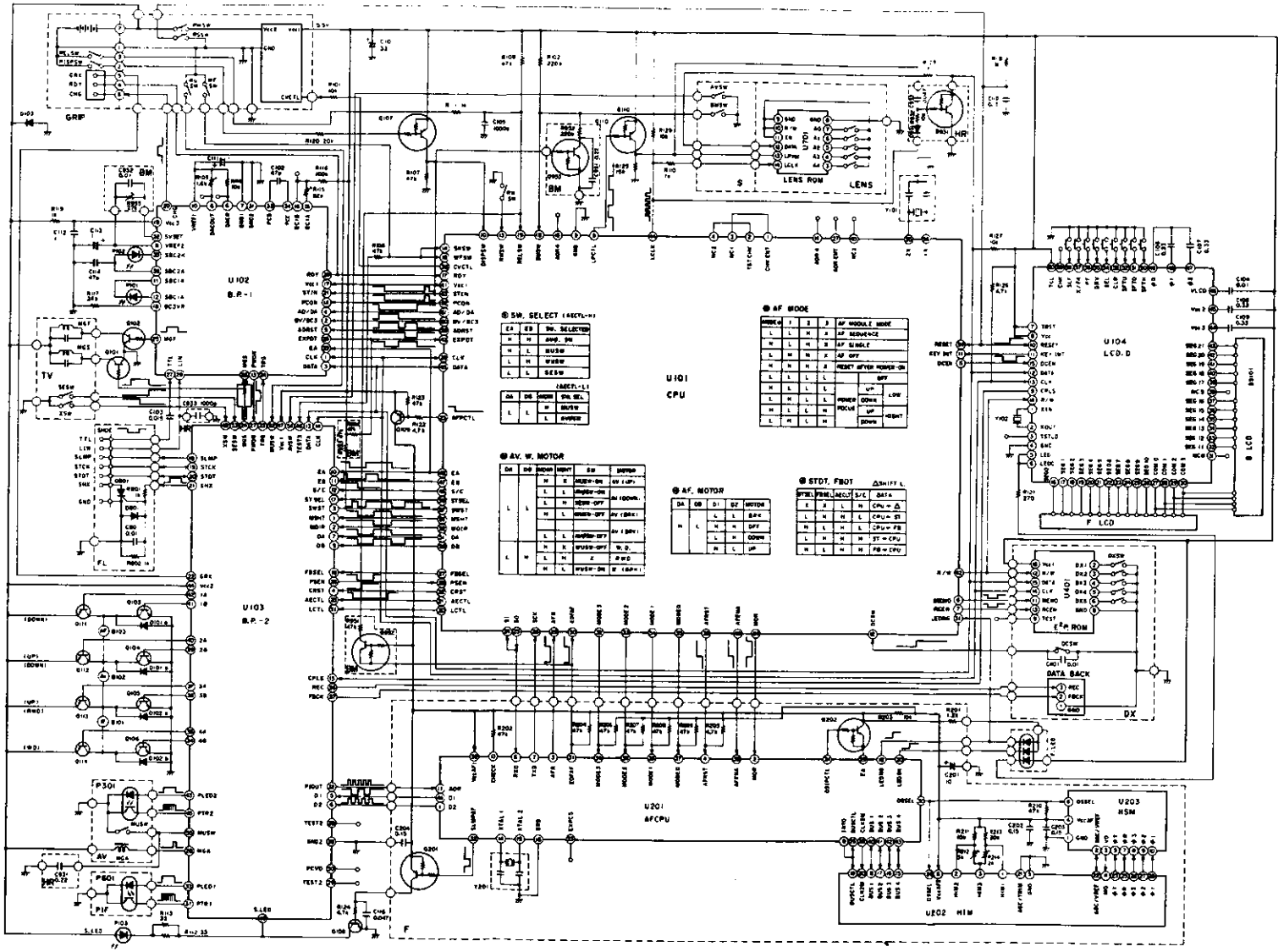

0886

ADS I CIRCUT DIAGRAM

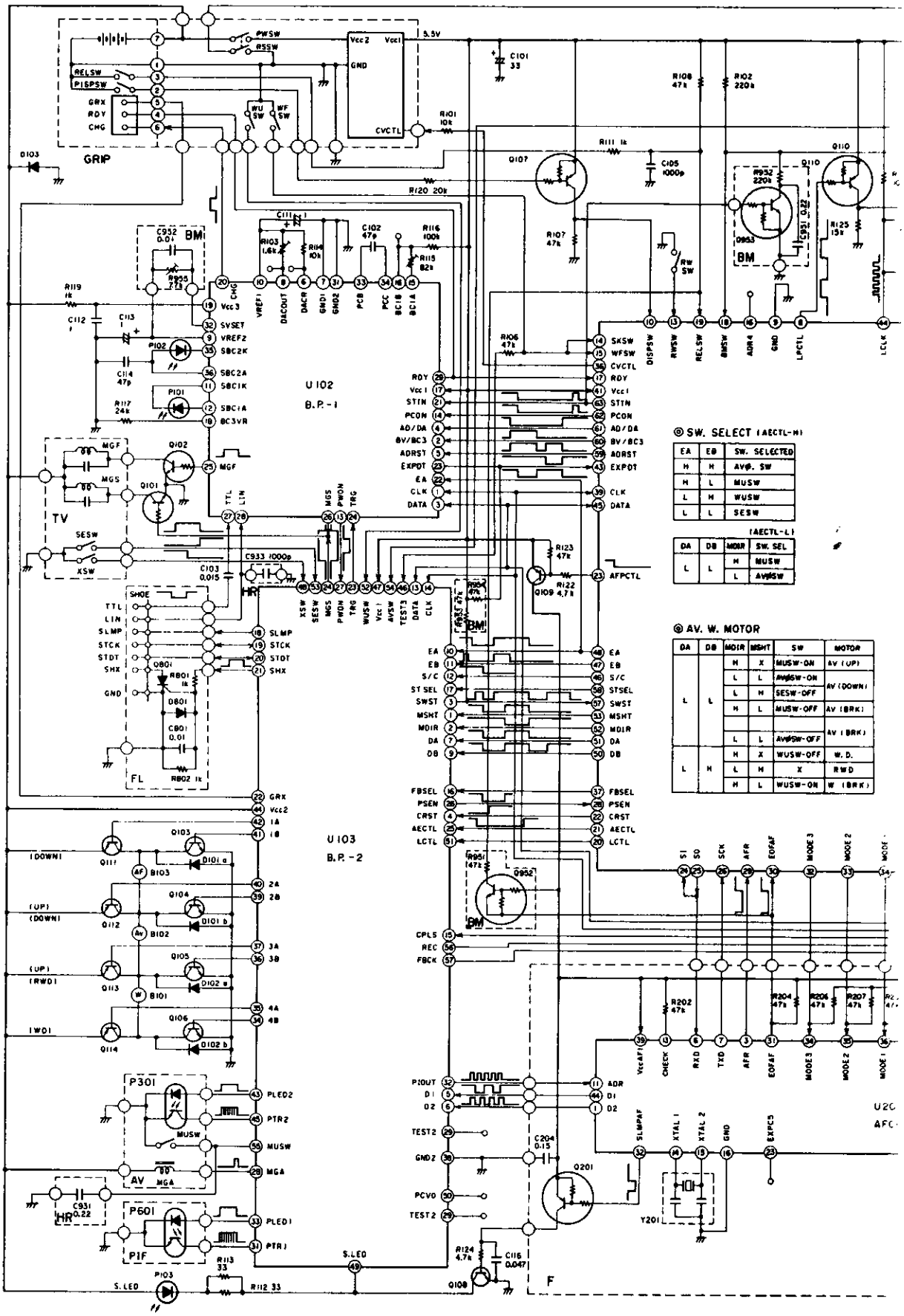

◎ SW. SELECT (AECTL-H)

EA	EB	SW. SELECTED
H	H	AV⊕. SW
H	L	MUSW
L	H	WUSW
L	L	SESW

(AECTL-L)

DA	DB	MDIR	SW. SEL
L	L	H	MUSW
		L	AV⊕SW

◎ AV. W. MOTOR

DA	DB	MDIR	MSHT	SW	MOTOR
L	L	H	X	MUSW-ON	AV (UP)
		L	L	AV⊕SW-ON	AV (DOWN)
		L	H	SESW-OFF	
		H	L	MUSW-OFF	AV (BRK)
					AV (BRK)
		L	L	AV⊕SW-OFF	
L	H	H	X	WUSW-OFF	W. D.
		L	H	X	RWD
		H	L	WUSW-ON	W (BRK)

0886

RCUT DIAGRAM

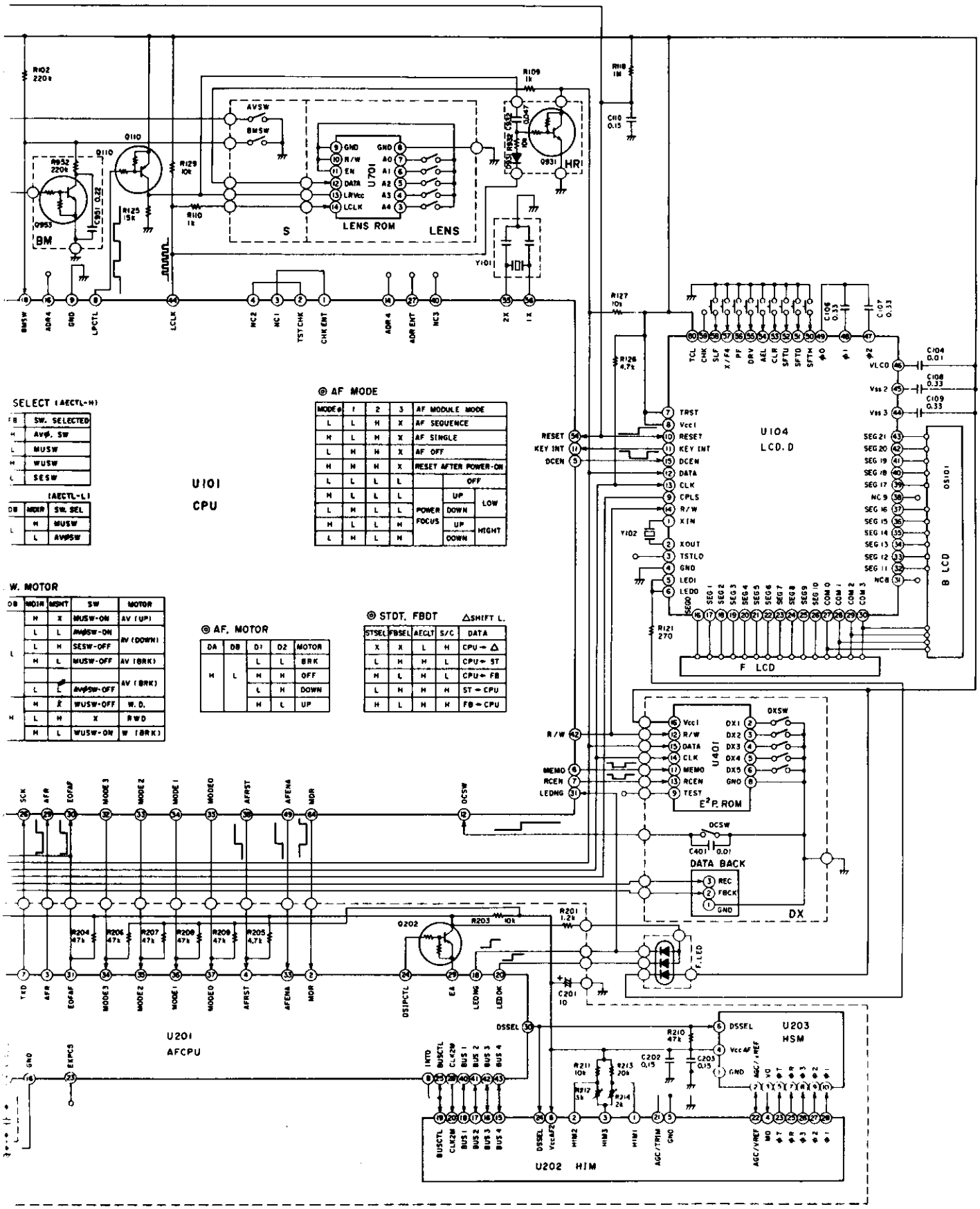

SELECT (AECTL-H)

	SW. SELECTED
H	AVφ. SW
L	MUSW
H	WUSW
L	SESW

(AECTL-L)

DB	MDIR	SW. SEL
H	MUSW	
L	AVφSW	

W. MOTOR

DB	MDIR	MSHT	SW	MOTOR
	H	X	MUSW-ON	AV (UP)
	L	L	AVφSW-ON	AV (DOWN)
	L	H	SESW-OFF	
	H	L	MUSW-OFF	AV (BRK)
	L	L	AVφSW-OFF	AV (BRK)
	H	X	WUSW-OFF	W. D.
H	L	H	X	RWD
	H	L	WUSW-ON	W (BRK)

◎ AF MODE

MODE φ	1	2	3	AF MODULE MODE		
L	L	H	X	AF SEQUENCE		
H	L	H	X	AF SINGLE		
L	H	H	X	AF OFF		
H	H	H	X	RESET AFTER POWER-ON		
L	L	L	L	OFF		
H	L	L	L	POWER FOCUS	UP	LOW
L	H	L	L		DOWN	
H	L	L	H		UP	HIGHT
L	H	L	H		DOWN	

◎ AF. MOTOR

DA	DB	D1	D2	MOTOR
H	L	L	L	BRK
		H	H	OFF
		L	H	DOWN
		H	L	UP

◎ STDT. FBDT △SHIFT L.

STSEL	FBSEL	AECLT	S/C	DATA
X	X	L	H	CPU → △
L	H	H	L	CPU → ST
H	L	H	L	CPU → FB
L	H	H	H	ST → CPU
H	L	H	H	FB → CPU

ADJ WIRING DIAGRAM (TYPE 2)

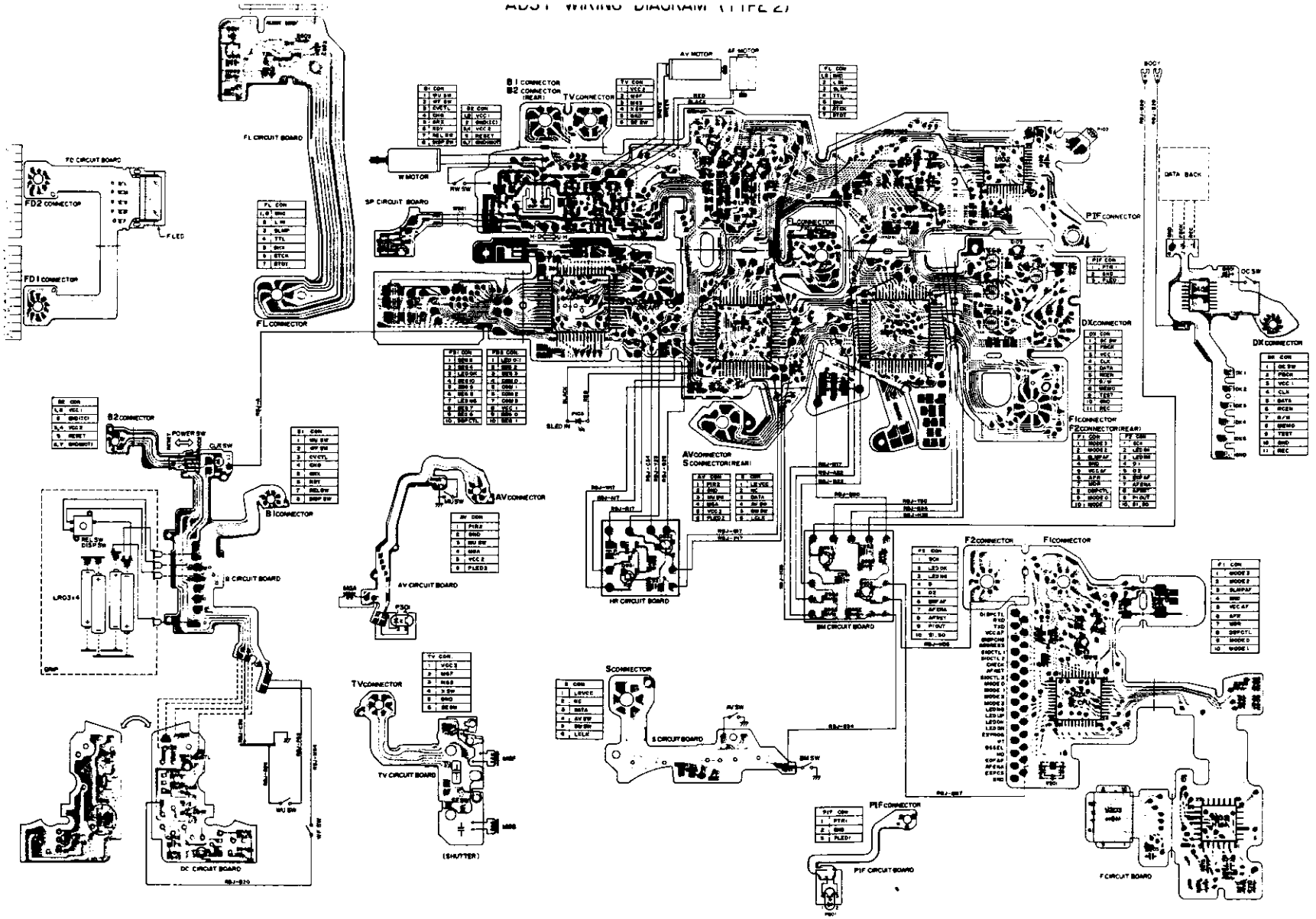

ADS I WIRING [

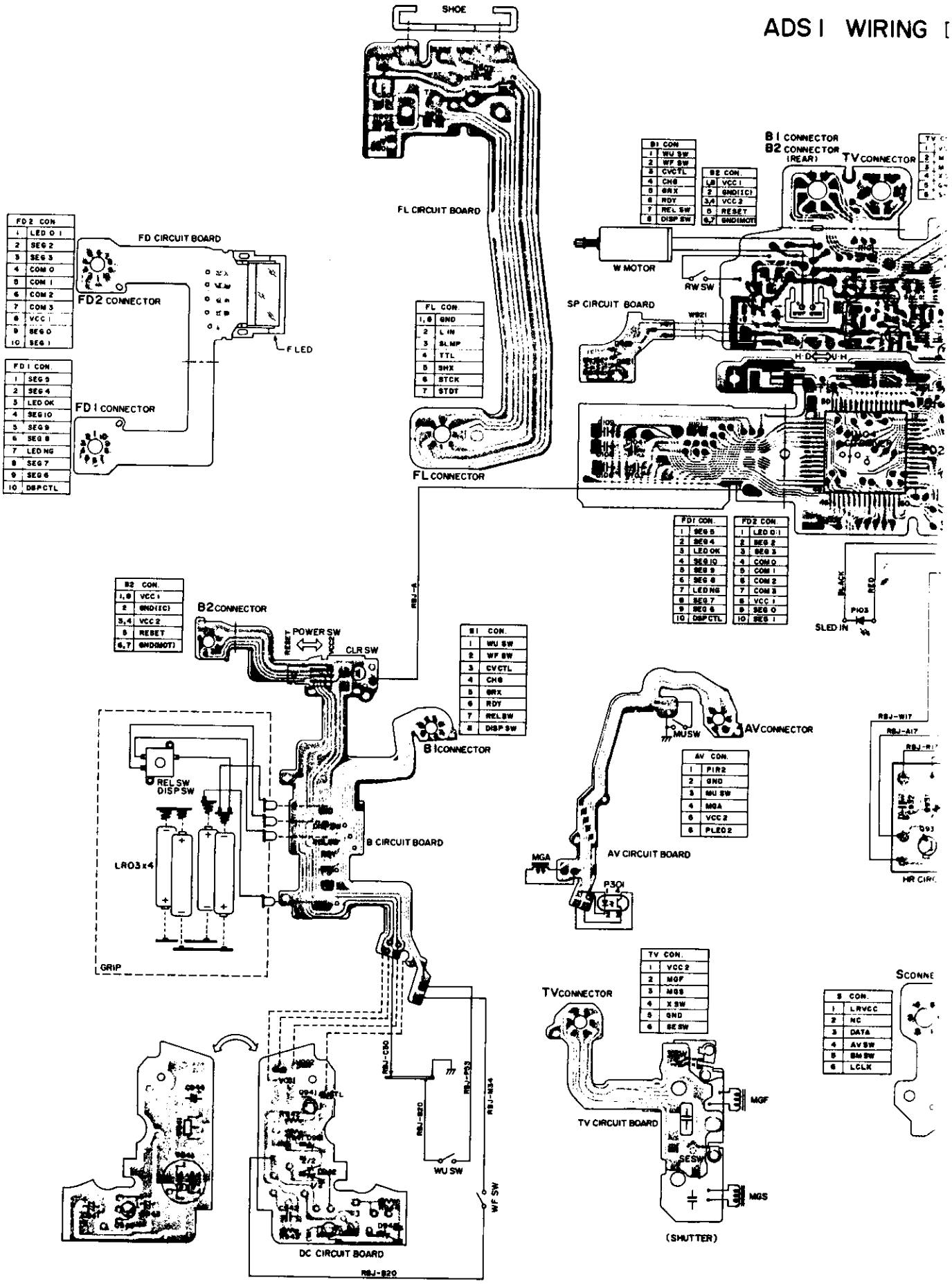
SHOE
FL CIRCUIT BOARD
FL CONNECTOR
FL CON.
1,8 GND
2 L IN
3 SLMP
4 TTL
5 SHX
6 STCK
7 STDT
FD CIRCUIT BOARD
FD2 CONNECTOR
FD2 CON.
1 LED O 1
2 SEG 2
3 SEG 3
4 COM O
5 COM 1
6 COM 2
7 COM 3
8 VCC 1
9 SEG O
10 SEG 1
F LED
FD1 CONNECTOR
FD1 CON.
1 SEG 5
2 SEG 4
3 LED OK
4 SEG 10
5 SEG 9
6 SEG 8
7 LED NG
8 SEG 7
9 SEG 6
10 DSP CTL
B1 CONNECTOR
B2 CONNECTOR (REAR)
TV CONNECTOR
B1 CON
1 WU SW
2 WF SW
3 CVCTL
4 CHG
5 SRX
6 RDY
7 REL SW
8 DISP SW
B2 CON.
1,8 VCC 1
2 GND(IC)
3,4 VCC 2
5 RESET
6,7 GND(MOT)
W MOTOR
RW SW
SP CIRCUIT BOARD
WS21
H D
U H
FD1 CON.
1 SEG 5
2 SEG 4
3 LED OK
4 SEG 10
5 SEG 9
6 SEG 8
7 LED NG
8 SEG 7
9 SEG 6
10 DSP CTL
FD2 CON.
1 LED O 1
2 SEG 2
3 SEG 3
4 COM O
5 COM 1
6 COM 2
7 COM 3
8 VCC 1
9 SEG O
10 SEG 1
BLACK
RED
PI03
SLED IN
RBJ-A
B2 CONNECTOR
B2 CON.
1,8 VCC 1
2 GND(IC)
3,4 VCC 2
5 RESET
6,7 GND(MOT)
POWER SW
RESET
VCC2
CLR SW
B1 CON.
1 WU SW
2 WF SW
3 CVCTL
4 CHG
5 SRX
6 RDY
7 REL SW
8 DISP SW
B1 CONNECTOR
REL SW
DISP SW
LR03 x 4
GRIP
B CIRCUIT BOARD
MU SW
AV CONNECTOR
AV CON.
1 PIR2
2 GND
3 MU SW
4 MGA
5 VCC 2
6 PLED2
MGA
AV CIRCUIT BOARD
P301
RBJ-W17
RBJ-A17
HR CIRC
TV CON.
1 VCC 2
2 MGF
3 MGS
4 X SW
5 GND
6 SE SW
TV CONNECTOR
TV CIRCUIT BOARD
MGF
SE SW
MGS
(SHUTTER)
SCONNE
S CON.
1 LRVCC
2 NC
3 DATA
4 AV SW
5 SM SW
6 LCLK
RBJ-C30
RBJ-P33
RBJ-N34
RBJ-B20
WU SW
WF SW
DC CIRCUIT BOARD
RBJ-B20

/IRING DIAGRAM (TYPE 2)

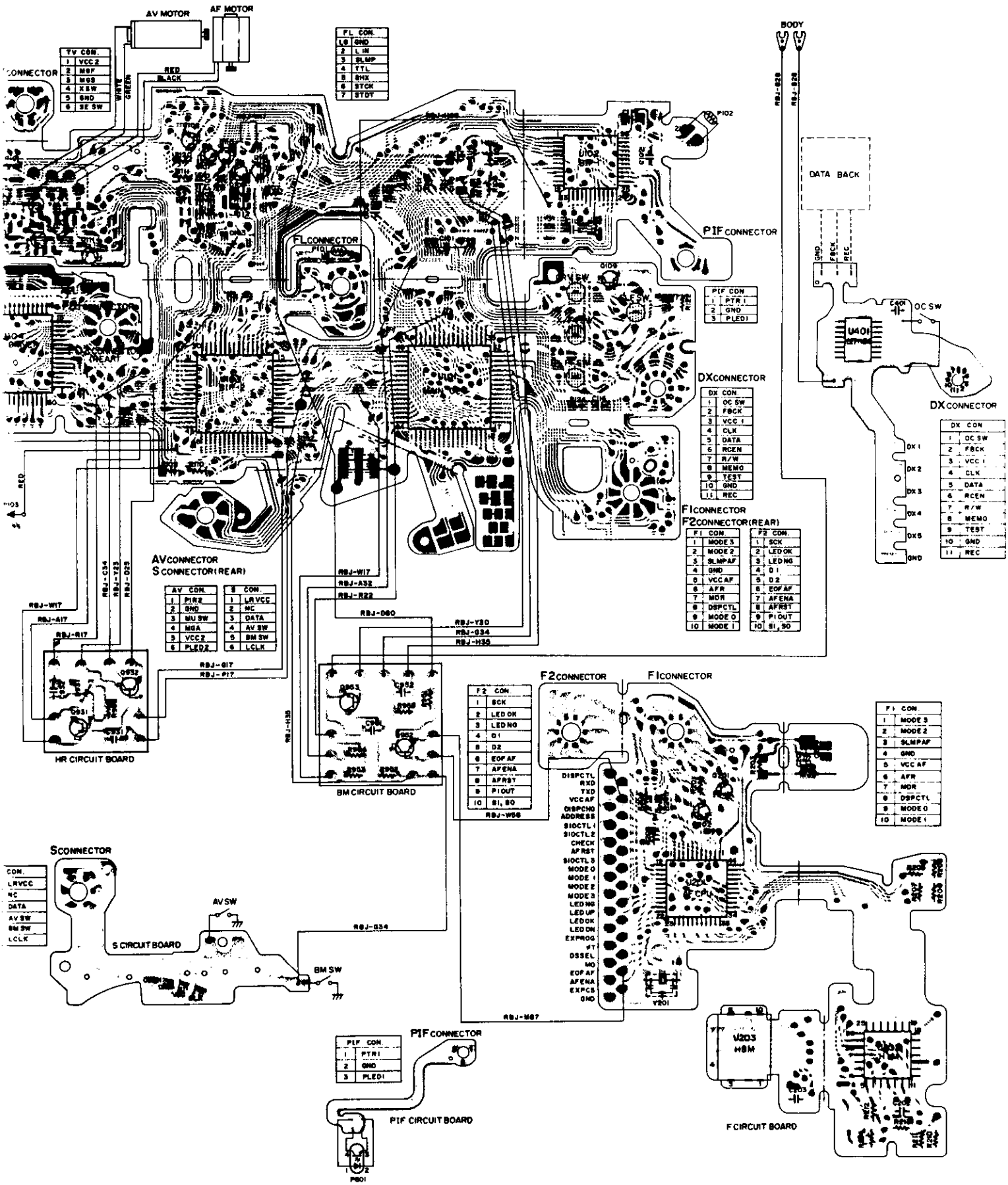

ADS1 CIRCUIT DIAGRAM (TYPE2)

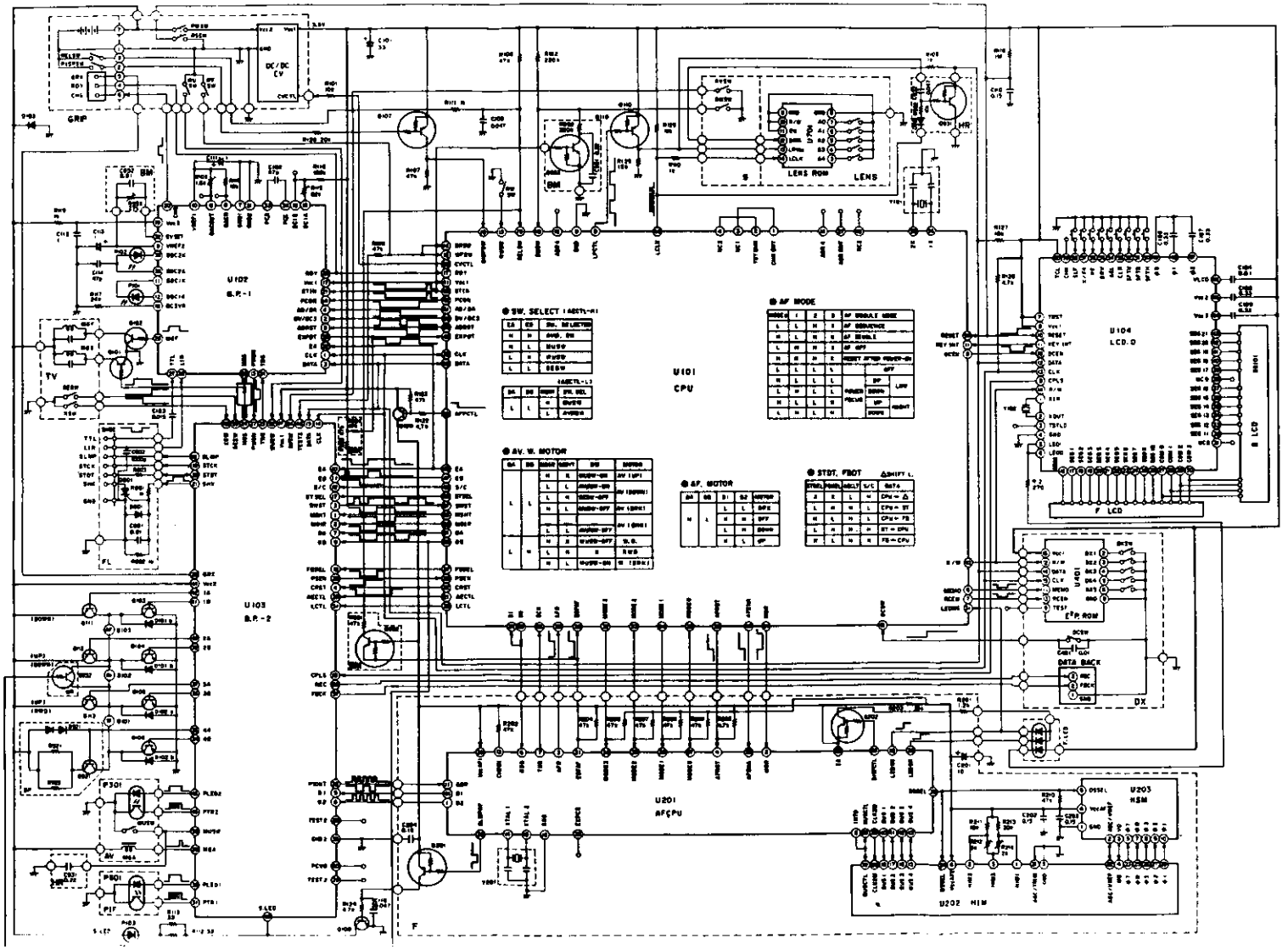

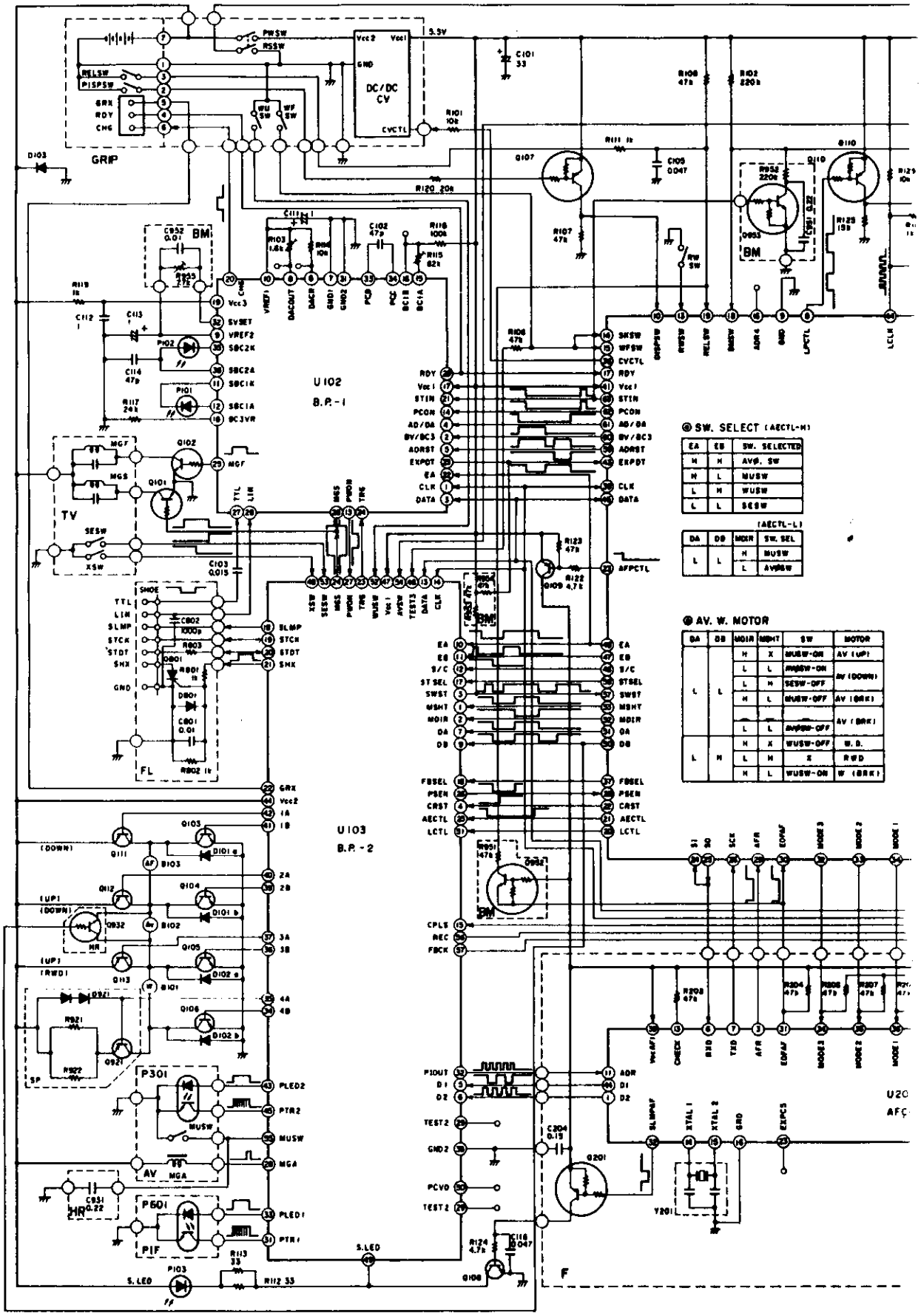

ⓐ SW. SELECT (AECTL-H)

EA	EB	SW. SELECTED
H	H	AVØ. SW
H	L	MUSW
L	H	WUSW
L	L	SESW

(AECTL-L)

DA	DB	MDIR	SW. SEL
L	L	H	MUSW
		L	AVØSW

ⓑ AV. W. MOTOR

DA	DB	MDIR	MSHT	SW	MOTOR
L	L	H	X	MUSW-ON	AV (UP)
		L	L	AVØSW-ON	AV (DOWN)
		L	H	SESW-OFF	
		H	L	MUSW-OFF	AV (BRK)
		—	—	—	AV (BRK)
		L	L	AVØSW-OFF	
L	H	H	X	WUSW-OFF	W. D.
		L	H	X	RWD
		H	L	WUSW-ON	W (BRK)

0866

CIRCUIT DIAGRAM (TYPE2)

No.J-1a

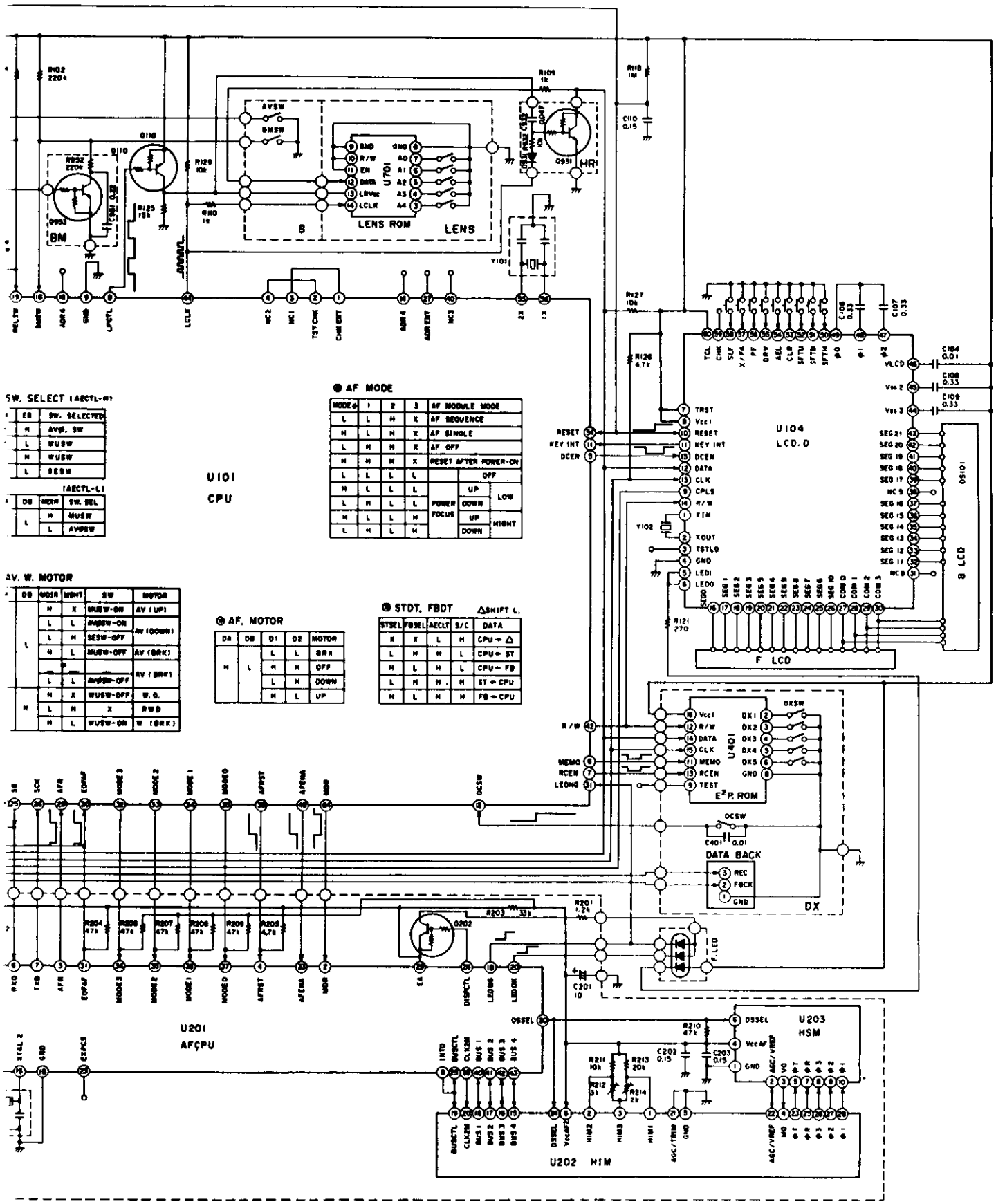

DC/DC CV・CIRCUIT DIAGRAM

No. J-1b